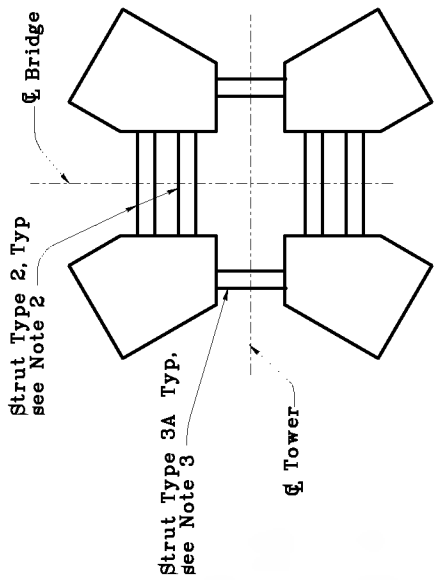

SECTION A-A
1:100

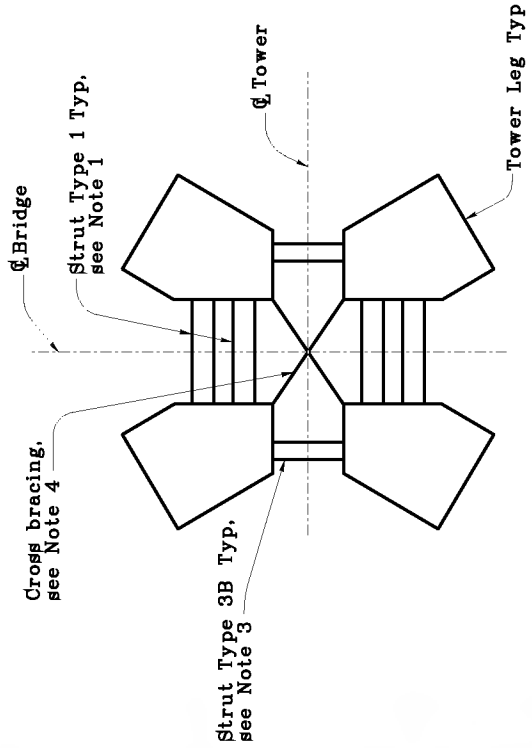

SECTION B-B
1:100

NOTES:

1. For details of Strut Type 1, see "Tower Strut Details No.3" sheet.
2. For details of Strut Type 2, see "Tower Strut Details No.5" sheet.
3. For details of Strut Type 3A and 3B, see "Tower Strut Details No.7" sheet.
4. For details of cross bracing, see "Tower Strut Details No.9" sheet.

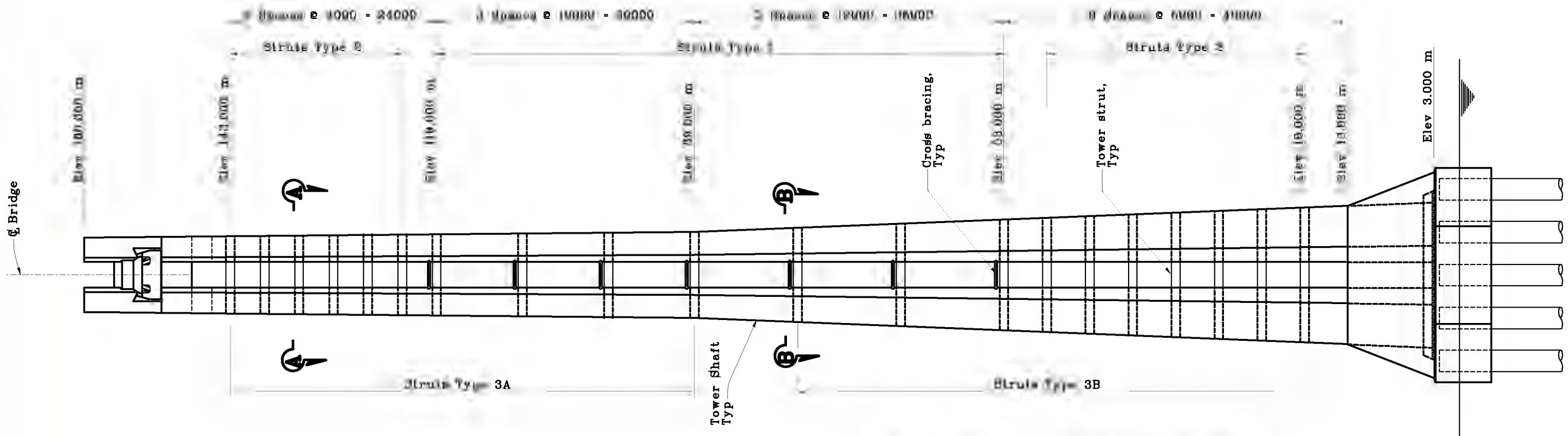

TOWER STRUT AND BRACING LAYOUT
1:250

Main Span Suspension Bridge
Preliminary Plans - Not for construction. Subject to changes.

M. Nader	S. Camo
L. Rus	S. Camo
L. Rus	Y. Zhang

Marwan N. Nader
C 054426
12/31/03

T125

TOWER STRUT DETAILS NO.1

08/28/99 05/31/01