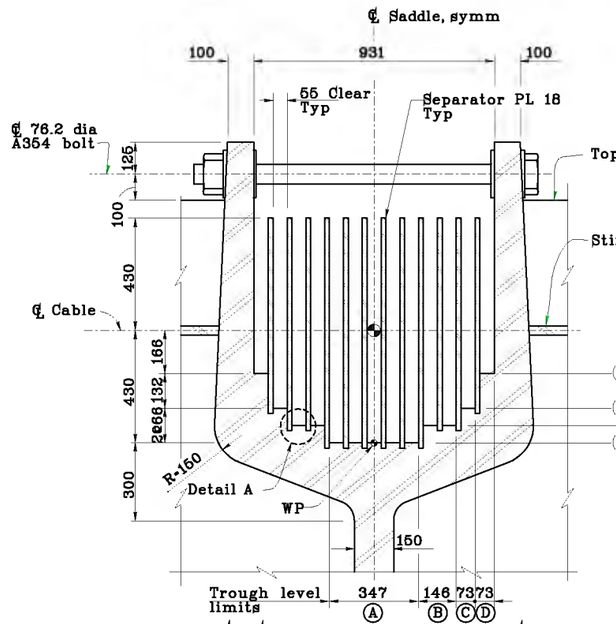

SECTION A-A - TYPICAL
1:10

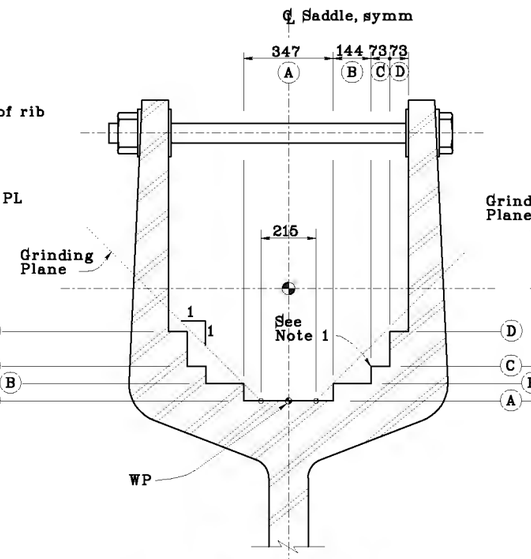

SECTION B-B
1:10

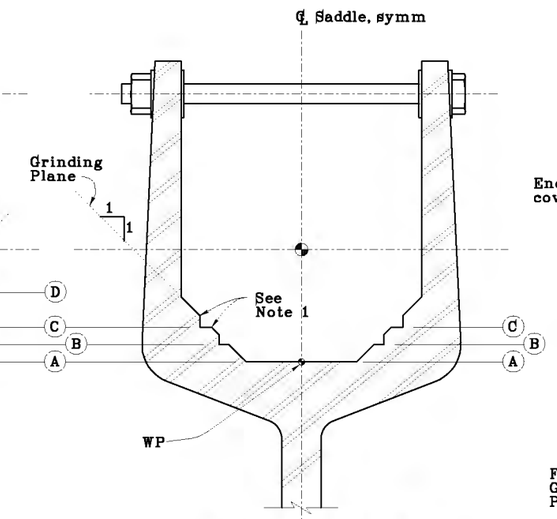

SECTION C-C
1:10

George S. Baker
C 57112
12/30/01

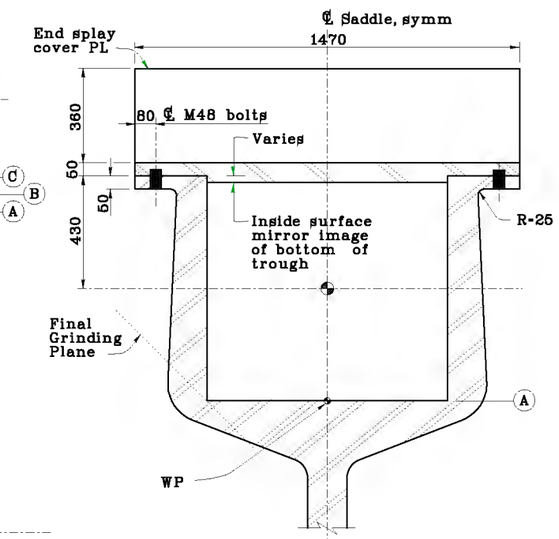

SECTION D-D
1:10

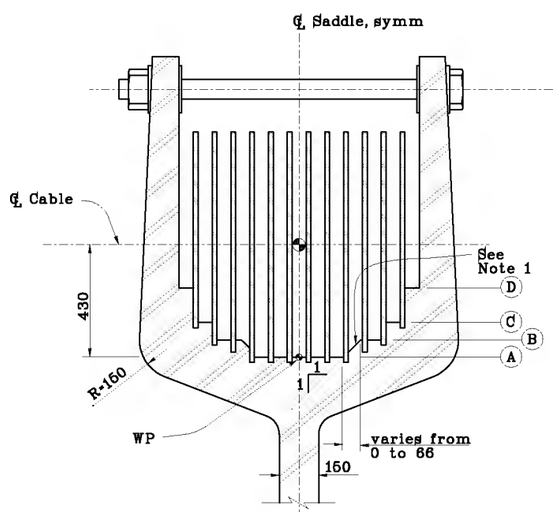

SECTION E-E
1:10

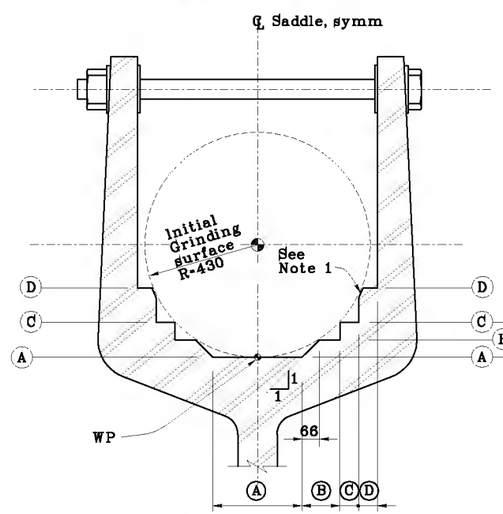

SECTION F-F
1:10

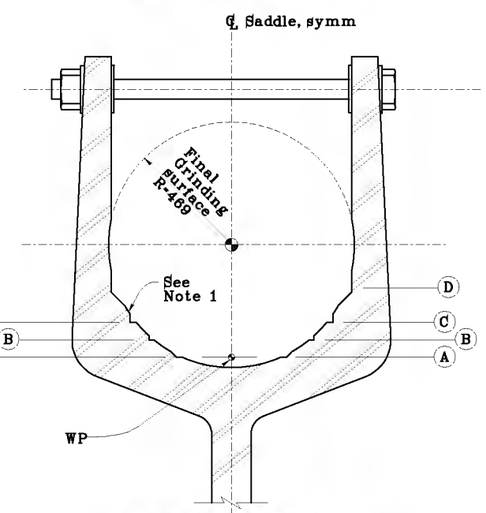

SECTION G-G
1:10

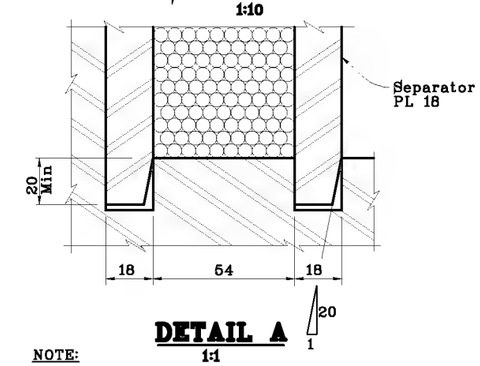

DETAIL A
1:1

NOTE:

1. All convex corners shall be ground smooth with radius R-20

T292B

G. Baker
M. Gulyas
D. Turner
J. Kuliki
T. McMeans
D. Harrison

Main Span Suspension Bridge
Preliminary Plans - Not for construction. Subject to changes.

EAST SADDLE DETAILS NO.5

08/22/99 08/01/01

292B