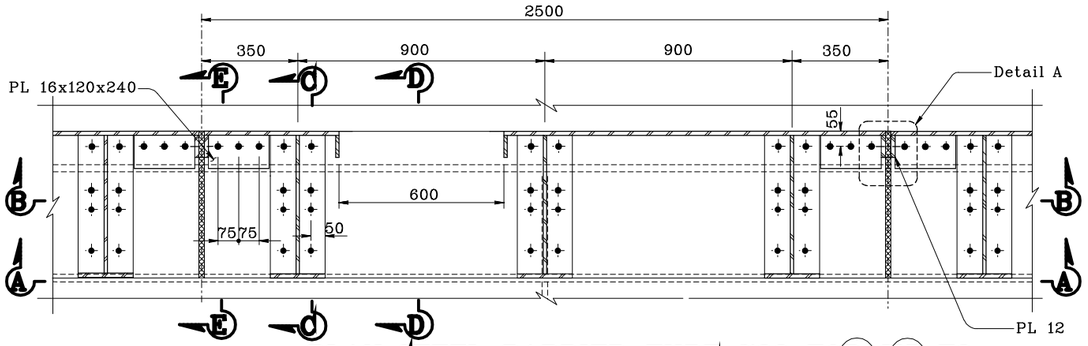

PLAN-STEEL BARRIER TYPE 732 FOR W5 E2 (MODIFIED)

1:10

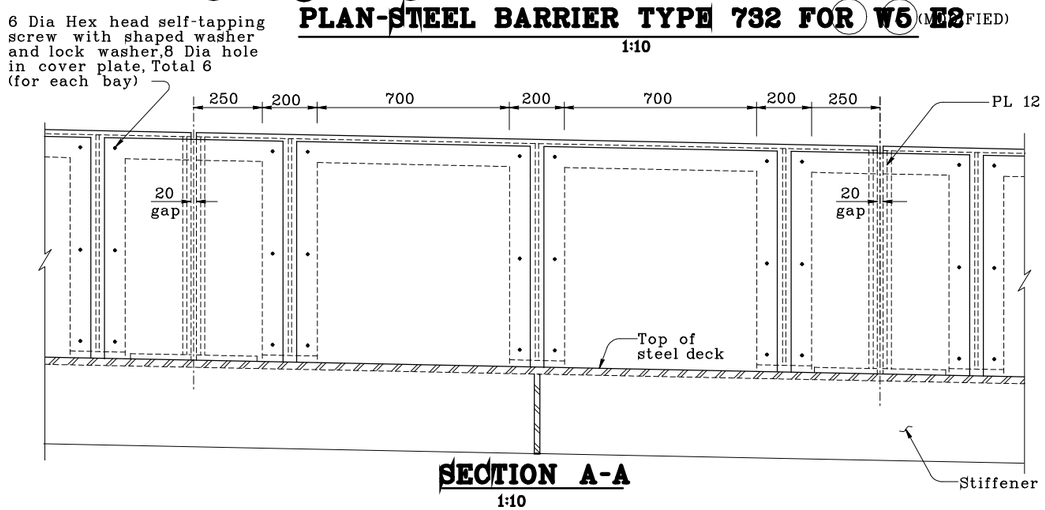

SECTION A-A

1:10

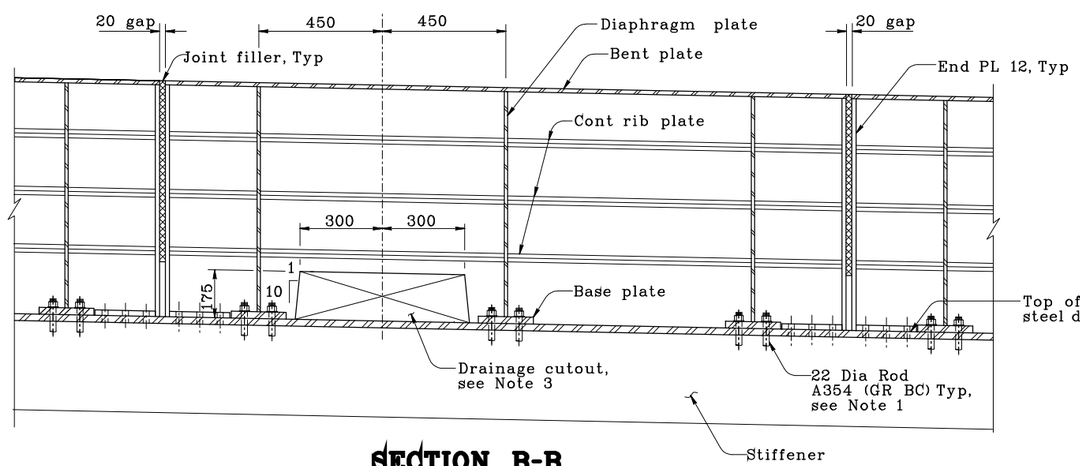

SECTION B-B

1:10

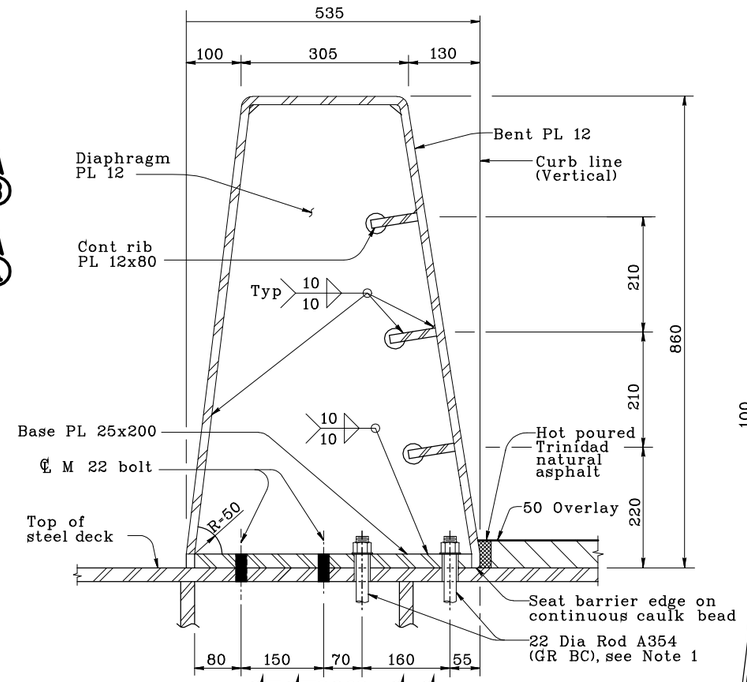

SECTION C-C

1:5

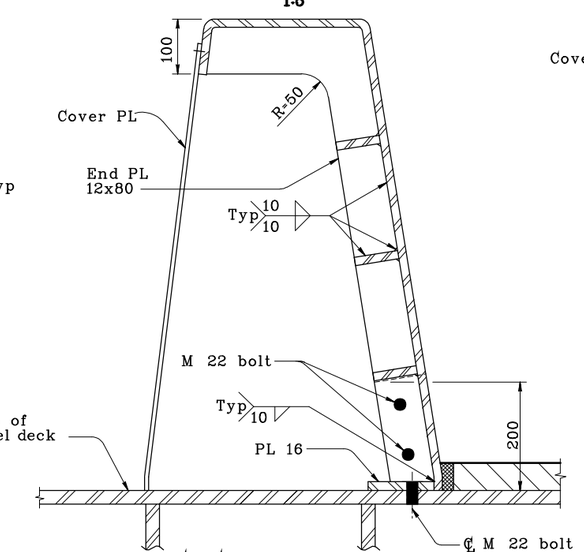

SECTION E-E

1:5

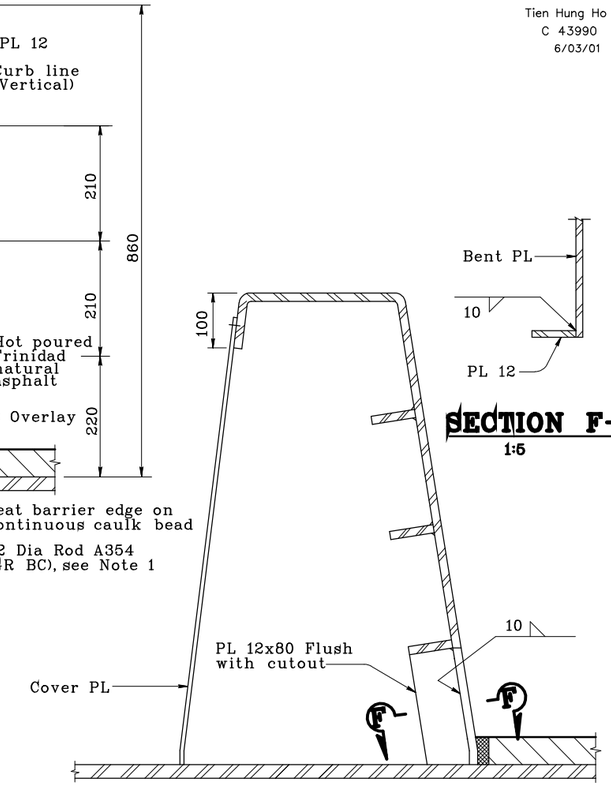

SECTION F-F

1:5

SECTION D-D

1:5

Tien Hung Ho
C 43990
6/03/01

NOTES:

1. For steel barrier to box girder connection details, see "Typical Girder Details " sheets.
2. Inlets and flume plates exist on south barrier of each deck only.
3. For locations of drainage features, see "Deck Drainage Details No.2" sheet.
4. For Detail A, see "Barrier Details No.2" sheet.

T367

T. Ho	M. Nader
G. Baker	M. Nader
C. Shi	K. Cormier

Main Span Suspension Bridge
Preliminary Plans - Not for construction. Subject to changes.

BARRIER DETAILS NO.1

01/16/99 06/16/99 08/26/99 06/04/01