CARQUINEZ BRIDGE
TRESTLE PILE

Contract 04-0130D4

- ***Pile As-Built Locations and Elevations***
- ***Pile Driving Logs***

CARQUINEZ BRIDGE
TRESTLE PILE

Contract 04-0130D4

Pile As-Built Locations and Elevations

DIST.	COUNTY	ROUTE	KILOMETER POST TOTAL PROJECT	SHEET NO.	TOTAL SHEETS
04	CC, Sol	80	22.0/22.7, 0.0/0.5	11	23

Caltrans Metric

Vincent T. Gastoni 11-10-98
REGISTERED ENGINEER - CIVIL

11-23-98
PLANS APPROVAL DATE

The State of California or its officers or agents shall not be responsible for the accuracy or completeness of electronic copies of this plan sheet.

REGISTERED PROFESSIONAL ENGINEER Vincent T Gastoni No. 52291 Exp. 12-31-98 CIVIL STATE OF CALIFORNIA

FOR AS-BUILT ELEVATIONS SEE ATTACHMENT 1 & 2

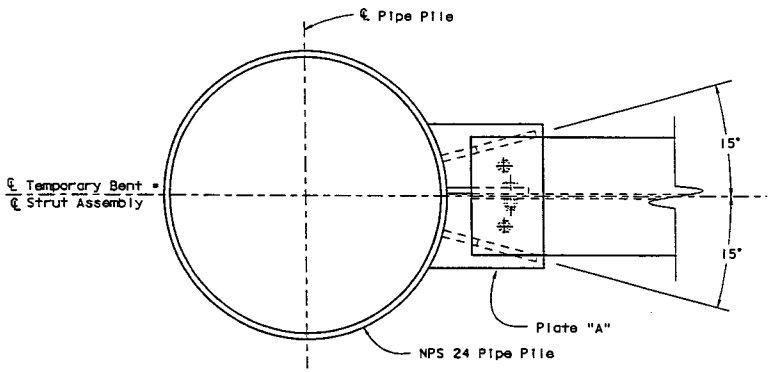

PLAN
1:5

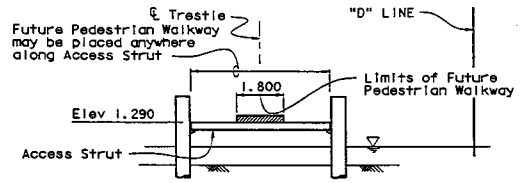

ELEVATION AT TRESTLE
1:100

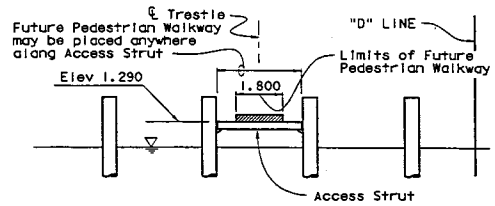

ELEVATION AT WORK PLATFORM
1:100

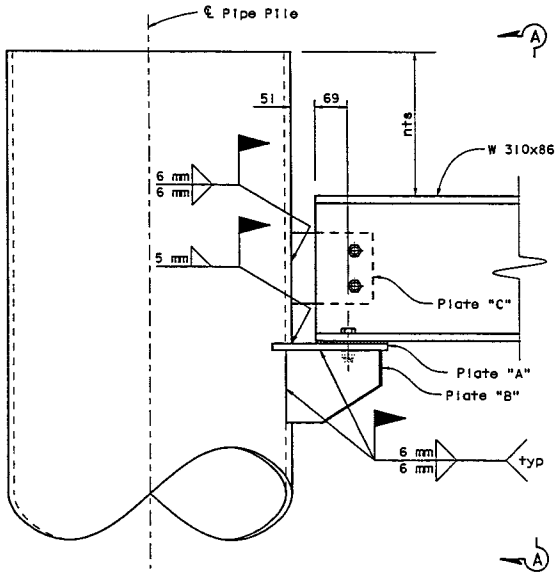

ELEVATION
1:5

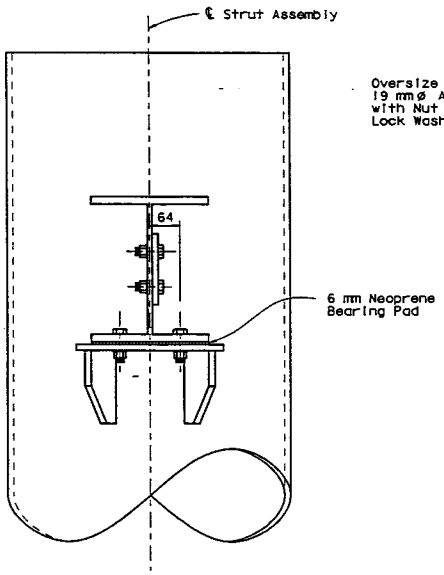

VIEW A-A
1:5

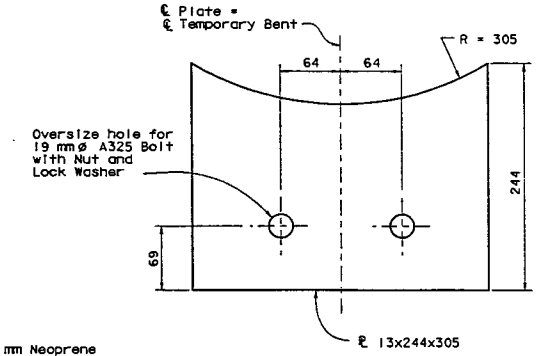

PLATE "A"
1:2.5

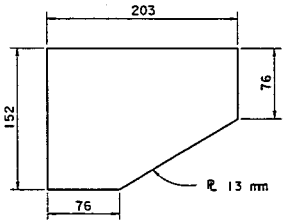

PLATE "B"
1:2.5

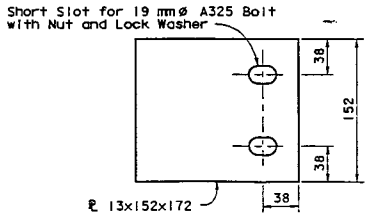

PLATE "C"
1:2.5

AS BUILT PLANS
Corrections by [signature]
Date 8/17/99

NOTE:
THE CONTRACTOR SHALL VERIFY ALL CONTROLLING FIELD DIMENSIONS BEFORE ORDERING OR FABRICATING ANY MATERIAL.

ALL DIMENSIONS ARE IN MILLIMETERS UNLESS OTHERWISE SHOWN

DESIGN	BY D. Yoo	CHECKED A. Rittenhouse	
DETAILS	BY L. Good 9-98	CHECKED A. Rittenhouse	
QUANTITIES	BY D. Yoo	CHECKED A. Rittenhouse	

STATE OF CALIFORNIA
DEPARTMENT OF TRANSPORTATION

DIVISION OF STRUCTURES
STRUCTURE DESIGN

BRIDGE NO. 28-0352L
KILOMETER POST N/A

CARQUINEZ TEMPORARY TRESTLE PILES
ACCESS STRUT DETAIL

STRUCTURES DESIGN DETAIL SHEET (METRIC) REV. 7/29/97

ORIGINAL SCALE IN MILLIMETERS FOR REDUCED PLANS 0 10 20 30 40 50 60 70 80 90 100

CU 04252
EA 0130D1

DISREGARD PRINTS BEARING EARLIER REVISION DATES

REVISION DATES (PRELIMINARY STAGE ONLY)

SHEET 5 OF 17

FILE => 352_dets_21102653

USERNAME => lrmikost DATE PLOTTED => 21-Nov-1998 TIME PLOTTED => 10:27

DIST.	COUNTY	ROUTE	KILOMETER POST TOTAL PROJECT	SHEET NO.	TOTAL SHEETS
04	CC, Sol	80	22.0/22.7, 0.0/0.5	10	23

Caltrans Metric

Vincent T. Gastoni 11-10-98
REGISTERED ENGINEER - CIVIL

11-23-98
PLANS APPROVAL DATE

The State of California or its officers or agents shall not be responsible for the accuracy or completeness of electronic copies of this plan sheet.

REGISTERED PROFESSIONAL ENGINEER
Vincent T. Gastoni
No. 52291
Exp. 12-31-98
CIVIL
STATE OF CALIFORNIA

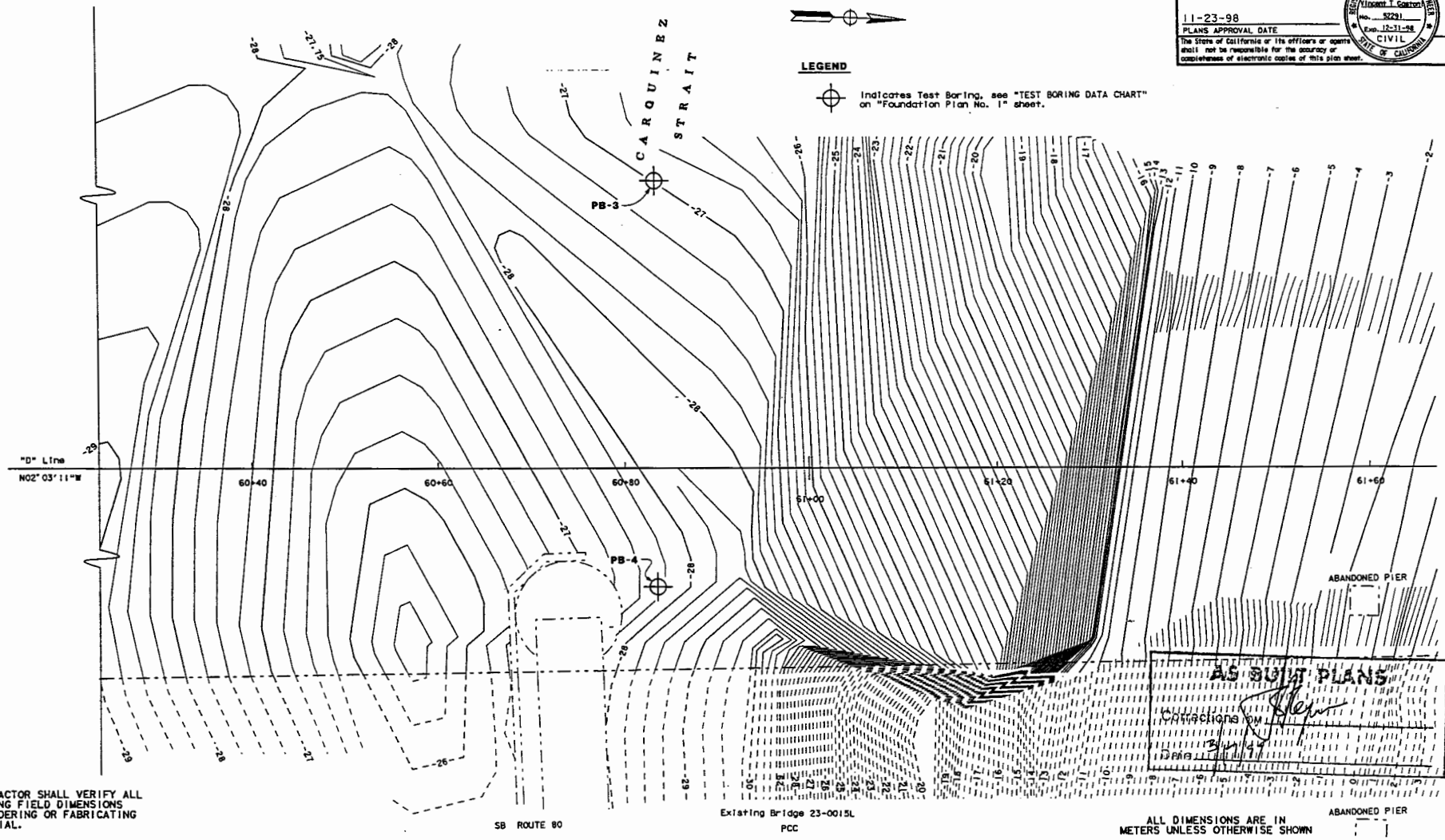

AS BUILT PLANS
Corrections on
Date 3/4/99

NOTE:
THE CONTRACTOR SHALL VERIFY ALL CONTROLLING FIELD DIMENSIONS BEFORE ORDERING OR FABRICATING ANY MATERIAL.

ALL DIMENSIONS ARE IN METERS UNLESS OTHERWISE SHOWN

PRELIMINARY INVESTIGATION SECTION							
SCALE 1:200	VERT. DATUM NGVD 1929	PHOTOGRAMMETRY AS OF:					
	HORZ. DATUM NAD 83	SURVEYED	BY P. CRITES	6/98	DRAFTED	BY J. RING	6/98
ALIGNMENT TIES DIST. TRAVERSE SHEETS		FIELD CHECKED	BY		CHECKED	BY P. CRITES	6/98

STRUCTURES FOUNDATION PLAN SHEET (METRIC) (REV. 3/17/98)

DESIGN	BY D. Yoo	CHECKED A. Rittenhouse	
DETAILS	BY L. Good 10-98	CHECKED A. Rittenhouse	
QUANTITIES	BY D. Yoo	CHECKED A. Rittenhouse	

ORIGINAL SCALE IN MILLIMETERS FOR REDUCED PLANS 0 10 20 30 40 50 60 70 80 90 100

STATE OF CALIFORNIA
DEPARTMENT OF TRANSPORTATION

DIVISION OF STRUCTURES
STRUCTURE DESIGN

CU 04252
EA 0130D1

FILE => 352_fp3_23090243

BRIDGE NO. 28-0352L
KILOMETER POST N/A

CARQUINEZ TEMPORARY TRESTLE PILES
FOUNDATION PLAN NO. 3

DISREGARD PRINTS BEARING EARLIER REVISION DATES

REVISION DATES (PRELIMINARY STAGE ONLY) 8/1/98 10-15-98 10-19-98 11-10-98

SHEET 4 OF 17

USERNAME => trmikosi DATE PLOTTED => 23-Nov-1998 TIME PLOTTED => 09:04

Y PANEL 1 OF

DIST.	COUNTY	ROUTE	KILOMETER POST TOTAL PROJECT	SHEET NO.	TOTAL SHEETS
04	CC, Sol	80	22.0/22.7, 0.0/0.5	7	23

Caltrans Metric

Vincent T. Gastoni 11-10-98
REGISTERED ENGINEER - CIVIL
11-23-98
PLANS APPROVAL DATE
The State of California or its officers or agents shall not be responsible for the accuracy or completeness of electronic copies of this plan sheet.

REGISTERED PROFESSIONAL ENGINEER Vincent T. Gastoni No. 52291 Exp. 12-31-98 CIVIL STATE OF CALIFORNIA

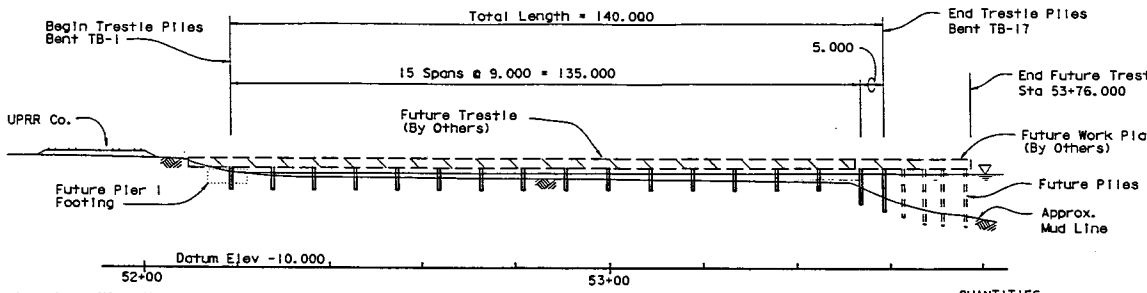

Note: Mean High High Water Elev = +0.825±
Mean Low Low Water Elev = -0.765±
Mean Sea Level = 0.000± USC & GS Sea Level Datum of 1929

ELEVATION
1:500

QUANTITIES

TEST BORINGS	274	m
FURNISH STEEL PIPE PILING (NPS 24)	112	m
DRIVE STEEL PIPE PILE (NPS 24)	56	EA
MISCELLANEOUS METAL (BRIDGE)	8,850	kg

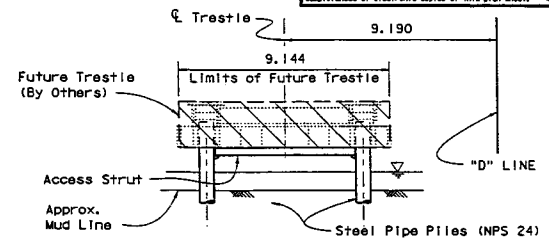

SECTION AT TRESTLE
1:100

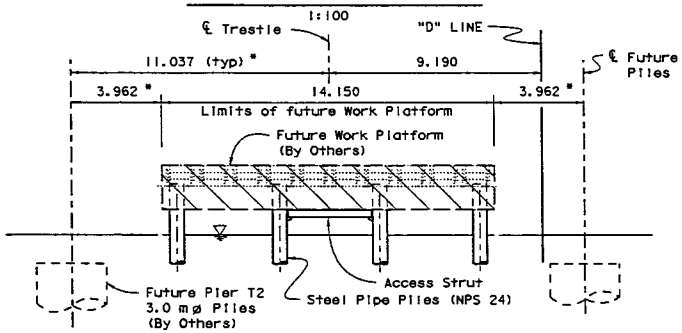

SECTION AT WORK PLATFORM
1:100

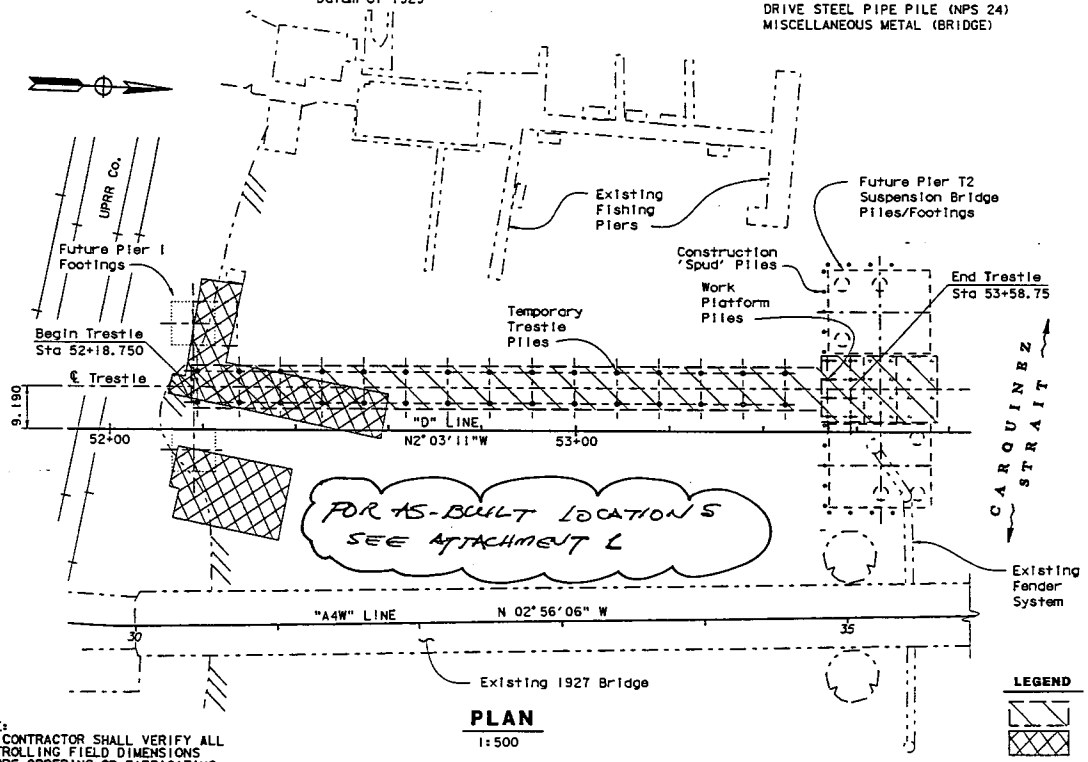

PLAN
1:500

AS BUILT PLANS
Corrections by
Date 7/17/99

INDEX TO PLANS

SHEET NO.	TITLE
1.	GENERAL PLAN
2.	FOUNDATION PLAN NO. 1
3.	FOUNDATION PLAN NO. 2
4.	FOUNDATION PLAN NO. 3
5.	ACCESS STRUT DETAILS
6.	LOG OF TEST BORINGS NO. 1
7.	LOG OF TEST BORINGS NO. 2
8.	LOG OF TEST BORINGS NO. 3
9.	LOG OF TEST BORINGS NO. 4
10.	LOG OF TEST BORINGS NO. 5
11.	LOG OF TEST BORINGS NO. 6
12.	LOG OF TEST BORINGS NO. 7
13.	LOG OF TEST BORINGS NO. 8
14.	LOG OF TEST BORINGS NO. 9
15.	LOG OF TEST BORINGS NO. 10
16.	LOG OF TEST BORINGS NO. 11
17.	LOG OF TEST BORINGS NO. 12

ALL DIMENSIONS ARE IN METERS UNLESS OTHERWISE SHOWN

LEGEND

Indicates future Trestle and Work Platform (by others)
Indicates limits of existing Pier Ruins removal
Indicates existing structure
* Dimensions for Future Piles/Footings are approximate

NOTE:
THE CONTRACTOR SHALL VERIFY ALL CONTROLLING FIELD DIMENSIONS BEFORE ORDERING OR FABRICATING ANY MATERIAL.

For General Notes see "Foundation Plan No. 2" sheet

DESIGN ENGINEER	DESIGN BY D. Yoo	CHECKED A. Rittenhouse	LOAD FACTOR DESIGN	LIVE LOADING: see General Notes	
	DETAILS BY L. Good 9-98	CHECKED A. Rittenhouse	LAYOUT	BY K. Kwong	CHECKED D. Yoo
	QUANTITIES BY D. Yoo	CHECKED A. Rittenhouse	SPECIFICATIONS	BY	PLANS AND SPECS COMPARED

STATE OF CALIFORNIA DEPARTMENT OF TRANSPORTATION
DIVISION OF STRUCTURES
STRUCTURE DESIGN

BRIDGE NO. 28-0352L
KILOMETER POST N/A

CARQUINEZ TEMPORARY TRESTLE PILES
GENERAL PLAN

STRUCTURES DESIGN GENERAL PLAN SHEET (METRIC) (REV. 4/15/97)

ORIGINAL SCALE IN MILLIMETERS FOR REDUCED PLANS 0 10 20 30 40 50 60 70 80 90 100

CU 04252
EA 0130D1

DISREGARD PRINTS BEARING EARLIER REVISION DATES

REVISION DATES (PRELIMINARY STAGE ONLY) 01-15-98 02-26-98 03-31-98 04-10-98 05-22-98 06-26-98 07-10-98 11-10-98

SHEET 1 OF 17

FILE => 352_gp21103648

USERNAME => trnlkast DATE PLOTTED => 21-Nov-1998 TIME PLOTTED => 10:37

DIST.	COUNTY	ROUTE	KILOMETER POST TOTAL PROJECT	SHEET NO.	TOTAL SHEETS
04	CC, Sol	80	22.0/22.7, 0.0/0.5	8	23

Vincent T. Gastoni 11-10-98
REGISTERED ENGINEER - CIVIL

11-23-98
PLANS APPROVAL DATE

The State of California or its officers or agents shall not be responsible for the accuracy or completeness of electronic copies of this plan sheet.

REGISTERED PROFESSIONAL ENGINEER Vincent T Gastoni No. 52281 Exp. 12-31-98 CIVIL STATE OF CALIFORNIA

Caltrans Metric

SURVEY CONTROL

CC-7
Fnd 1" Iron pipe w/ red plastic cap and tack embedded in conc.
363.367M left of sta. 47+81.989
Elev. = 41.605

SOL-1
Fnd 1" Iron pipe w/ red plastic cap and tack embedded in conc.
181.340M right of sta. 63.22.553
Elev. = 92.193

TEST BORING DATA CHART

BORING	LOCATION	BORING DEPTH (Elevation)
PB-1	12.5 m Lt Sta 52+94.500	-65.0 m
PB-2	12.8 m Rt Sta 53+74.500	-91.5 m
PB-3	30.9 m Lt Sta 60+83.500	-76.5 m
PB-4	12.8 m Rt Sta 60+83.500	-76.5 m

PILE DATA - (NPS 24) STEEL SHELL PILE

LOCATION	PILE TYPE	DESIGN LOADING	NOMINAL RESISTANCE COMPRESSION	NOMINAL RESISTANCE TENSION	CUT OFF ELEVATION	APPROX. TIP ELEV. (1)	APPROX. TIP ELEV. (2)	APPROX. TIP ELEV.
TB-1	NPS24x0.625	1780 kN	3560 kN	0	+2.4 m	-39.0	-22.0	-39.0
TB-2	NPS24x0.625	1780 kN	3560 kN	0	+2.4 m	-39.0	-22.5	-39.0
TB-3	NPS24x0.625	1780 kN	3560 kN	0	+2.4 m	-39.0	-23.0	-39.0
TB-4	NPS24x0.625	1780 kN	3560 kN	0	+2.4 m	-40.0	-23.0	-40.0
TB-5	NPS24x0.625	1780 kN	3560 kN	0	+2.4 m	-40.0	-23.5	-40.0
TB-6	NPS24x0.625	1780 kN	3560 kN	0	+2.4 m	-41.0	-24.0	-41.0
TB-7	NPS24x0.625	1780 kN	3560 kN	0	+2.4 m	-41.0	-24.5	-41.0
TB-8	NPS24x0.625	1780 kN	3560 kN	0	+2.4 m	-41.0	-25.0	-41.0
TB-9	NPS24x0.625	1780 kN	3560 kN	0	+2.4 m	-42.0	-25.5	-42.0
TB-10	NPS24x0.625	1780 kN	3560 kN	0	+2.4 m	-42.0	-26.0	-42.0
TB-11	NPS24x0.625	1780 kN	3560 kN	0	+2.4 m	-43.0	-26.0	-43.0
TB-12	NPS24x0.625	1780 kN	3560 kN	0	+2.4 m	-43.0	-26.5	-43.0
TB-13	NPS24x0.625	1780 kN	3560 kN	0	+2.4 m	-44.0	-27.0	-44.0
TB-14	NPS24x0.625	1780 kN	3560 kN	0	+2.4 m	-44.0	-27.5	-44.0
TB-15	NPS24x0.625	1780 kN	3560 kN	0	+2.4 m	-44.0	-27.5	-44.0
TB-16 & Spuds	NPS24x0.625	1780 kN	3560 kN	0	+2.4 m	-45.0	-28.0	-45.0
TB-17 & Spuds	NPS24x0.625	1780 kN	3560 kN	0	+2.4 m	-45.0	-29.0	-45.0

Pile Tip Elevation is controlled by the following Demands:
(1) Compression (2) Lateral

NOTE:
THE CONTRACTOR SHALL VERIFY ALL CONTROLLING FIELD DIMENSIONS BEFORE ORDERING OR FABRICATING ANY MATERIAL.

FOR ASBUILT ELEVATIONS SEE ATTACHMENT 1 & 2

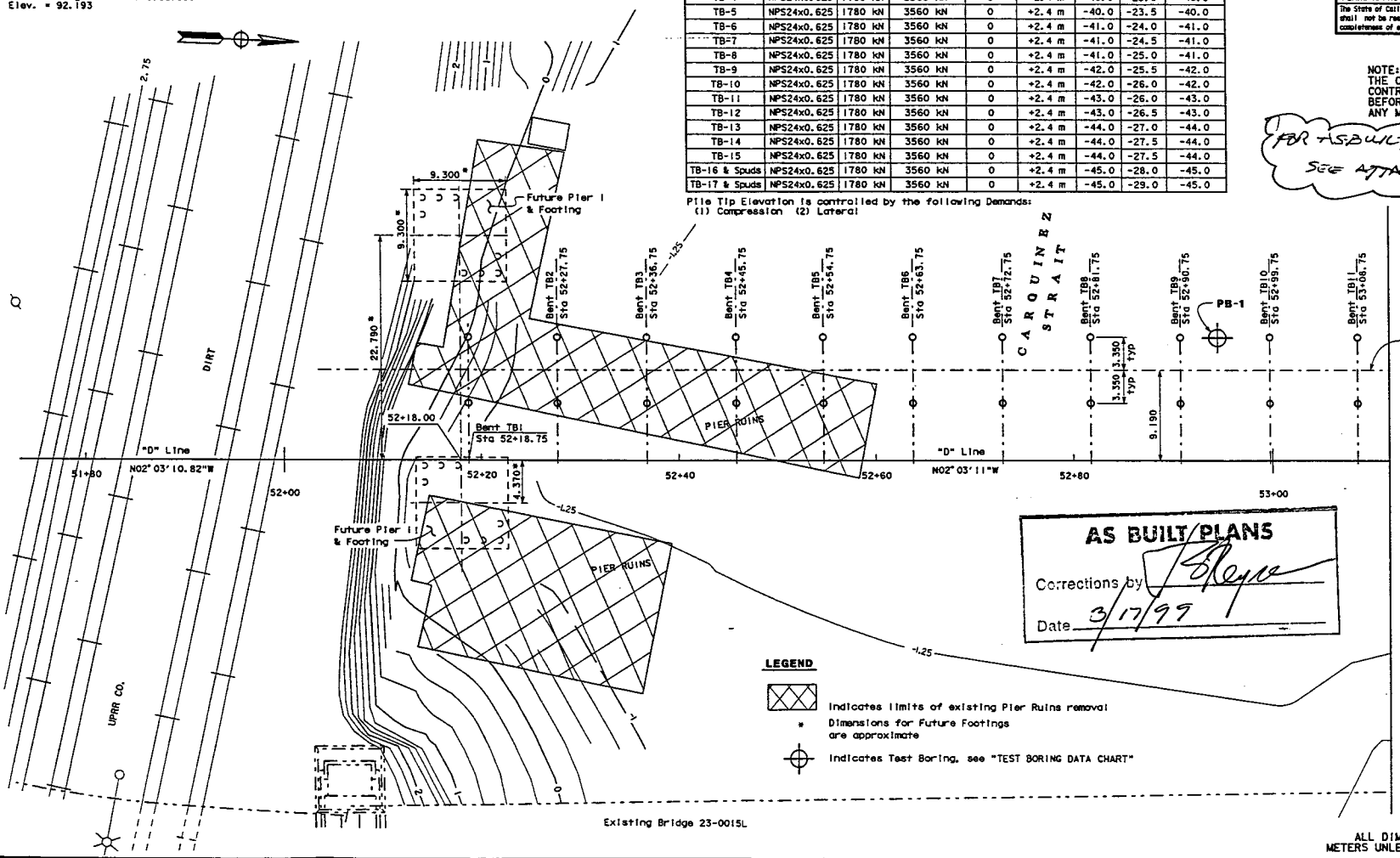

AS BUILT PLANS
Corrections by T Reyes
Date 3/17/99

LEGEND

Indicates limits of existing Pier Ruins removal

* Dimensions for Future Footings are approximate

Indicates Test Boring, see "TEST BORING DATA CHART"

ALL DIMENSIONS ARE IN METERS UNLESS OTHERWISE SHOWN

PRELIMINARY INVESTIGATION SECTION

SCALE	VERT. DATUM NGVD 1929	PHOTOGRAMMETRY AS OF:		
1:200	HORZ. DATUM NAD 83	SURVEYED BY P. CRITES 6/98	DRAFTED BY J. RING 6/98	
ALIGNMENT TIES DIST. TRAVERSE SHEETS		FIELD CHECKED BY	CHECKED BY P. CRITES 6/98	

	BY	CHECKED
DESIGN	D. Yoo	A. Rittenhouse
DETAILS	L. Good 9-98	A. Rittenhouse
QUANTITIES	D. Yoo	A. Rittenhouse

STATE OF CALIFORNIA
DEPARTMENT OF TRANSPORTATION

DIVISION OF STRUCTURES
STRUCTURE DESIGN

CU 04252
EA 013001

BRIDGE NO. 28-0352L
KILOMETER POST N/A

CARQUINEZ TEMPORARY TRESTLE PILE
FOUNDATION PLAN NO. 1

SHEET 2 OF 17

STRUCTURES FOUNDATION PLAN SHEET (METRIC) (REV. 2/17/98)

ORIGINAL SCALE IN MILLIMETERS FOR REDUCED PLANS 0 10 20 30 40 50 60 70 80 90 100

DISREGARD PRINTS BEARING EARLIER REVISION DATES

REVISION DATES (PRELIMINARY STAGE ONLY)

FILE => 352_fpl_21102654

Y PANEL 1 OF 2

DATE PLOTTED => 21-Nov-1998 TIME PLOTTED => 10:28

USERNAME =>

DIST.	COUNTY	ROUTE	KILOMETER POST TOTAL PROJECT	SHEET NO.	TOTAL SHEETS
04	CC, Sol	80	22.0/22.7, 0.0/0.5	9	23

Vincent T. Gastoni 11-10-98
REGISTERED ENGINEER - CIVIL

11-23-98
PLANS APPROVAL DATE

The State of California or its officers or agents shall not be responsible for the accuracy or completeness of electronic copies of this plan sheet.

REGISTERED PROFESSIONAL ENGINEER Vincent T Gastoni No. 52291 Exp. 12-31-98 CIVIL STATE OF CALIFORNIA

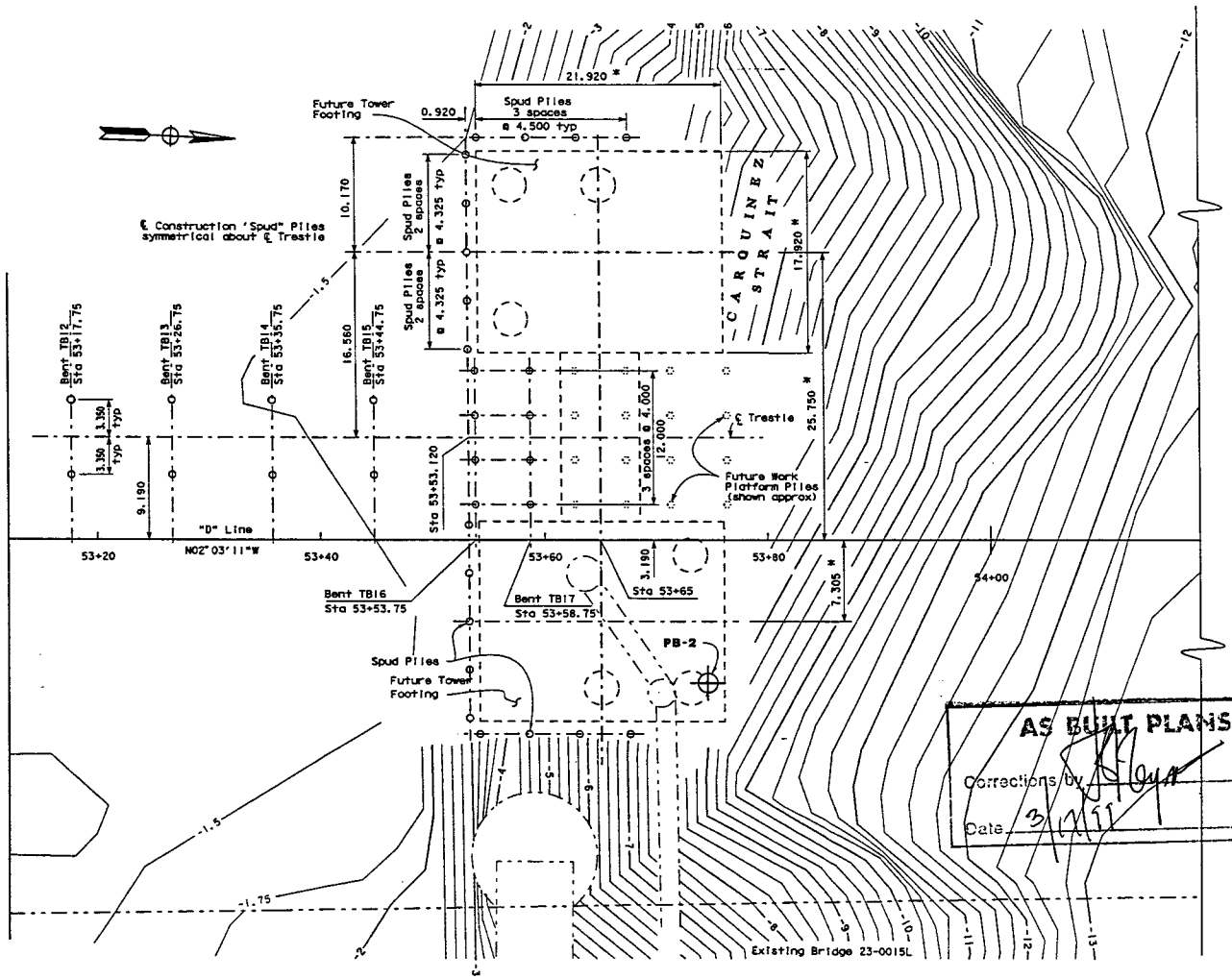

AS BUILT PLANS
Corrections by
Date 3/17/99

GENERAL NOTES
LOAD FACTOR DESIGN

DESIGN: BRIDGE DESIGN SPECIFICATIONS
(1983 AASHTO with Interims and Revisions by CALTRANS)
AASHTO Guide Design Specification for Bridge Temporary Works

DEAD LOAD: Includes 62 kN/m for future trestle load

LIVE LOADING:

CRANE LOADING

Design Machine Dimensions:

Crawler tread length	9.375 m
Crawler tread width	1.220 m
"Out to Out" width	7.925 m

Design Machine Weights:

Machine on Trestle (w/o Boom and Counterweights)	2900 kN
Machine on Platform (w Boom and Counterweights)	3900 kN

Design Machine Loads:

Machine on Trestle (w/o Boom and Counterweights)	2900 kN
Machine on Platform (w Boom and Counterweights Pile Casing, Hammer, etc.)	5650 kN
Drill Torque on Platform	680 kN-m

PEDESTRIAN LOADING
Includes 4.1 kN/m^2 for future Pedestrian

SEISMIC LOADING: Minimum Seismic Load = 2% of anticipated total Dead Load

STEEL PIPE PILES:

f_y = (minimum Yield strength = 250 MPa

f_u = (minimum Ultimate strength = 400 MPa

FOR AS BUILT LOCATIONS SEE ATTACHMENT 1 & 2

LEGEND

⊕ Indicates Test Boring, see "TEST BORING DATA CHART" on "Foundation Plan No. 1" sheet.

* Dimensions for Future Footings are approximate

NOTE:
THE CONTRACTOR SHALL VERIFY ALL CONTROLLING FIELD DIMENSIONS BEFORE ORDERING OR FABRICATING ANY MATERIAL.

ALL DIMENSIONS ARE IN METERS UNLESS OTHERWISE SHOWN

PRELIMINARY INVESTIGATION SECTION

SCALE 1:200	VERT. DATUM NGVD 1929	PHOTOGRAMMETRY AS OF:					
	HORZ. DATUM NAD 83	SURVEYED BY P. CRITES 6/98	DRAFTED BY J. RING 6/98				
ALIGNMENT TIES DIST. TRAVERSE SHEETS		FIELD CHECKED BY	CHECKED BY P. CRITES 6/98				

STRUCTURES FOUNDATION PLAN SHEET (METRIC) REV. 3/17/98

DESIGN	BY D. Yoo	CHECKED A. Rittenhouse
DETAILS	BY L. Good 9-98	CHECKED A. Rittenhouse
QUANTITIES	BY D. Yoo	CHECKED A. Rittenhouse

ORIGINAL SCALE IN MILLIMETERS FOR REDUCED PLANS 0 10 20 30 40 50 60 70 80 90 100

STATE OF CALIFORNIA
DEPARTMENT OF TRANSPORTATION

DIVISION OF STRUCTURES
STRUCTURE DESIGN

CU 04252
EA 0130D1

FILE => 352_fp2_21102659

BRIDGE NO. 28-0352L
KILOMETER POST N/A

CARQUINEZ TEMPORARY TRESTLE PILE
FOUNDATION PLAN NO. 2

DISREGARD PRINTS BEARING EARLIER REVISION DATES

REVISION DATES (PRELIMINARY STAGE ONLY)

SHEET 3 OF 17

Y PANEL 1 OF 2

J1 DATE PLOTTED => 21-Nov-1998 TIME PLOTTED => 10:29

USERNAME =>

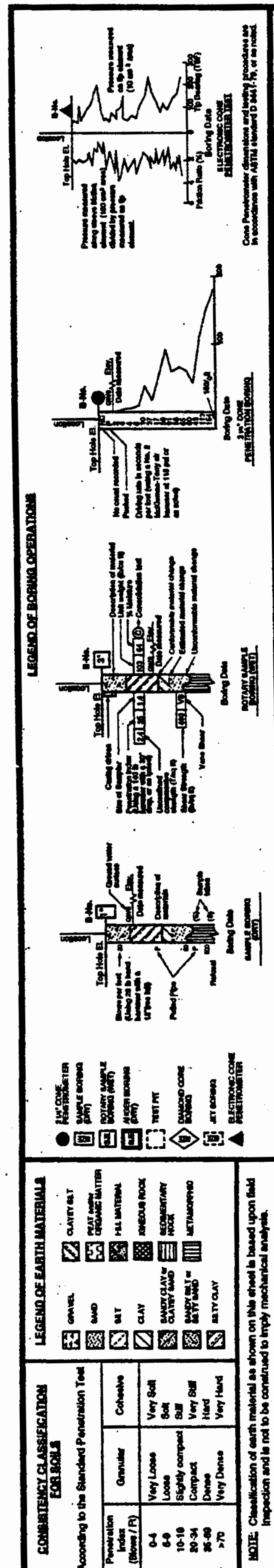

WEATHERING DESCRIPTORS

Descriptors		Diagnostic features					General characteristics (strength, excavation, etc.) §
		Chemical weathering-Discoloration and/or oxidation		Mechanical weathering-Grain boundary conditions (disaggregation) primarily for granitics and some coarse-grained sediments	Texture and solutioning		
Alphanumeric descriptor	Descriptive term	Body of rock	Fracture surfaces†		Texture	Solutioning	
W1	Fresh	No discoloration, not oxidized	No discoloration or oxidation	No separation, intact (tight)	No change	No solutioning	Hammer rings when crystalline rocks are struck. Almost always rock excavation except for naturally weak or weakly cemented rocks such as siltstones or shales.
W2	Slightly weathered to fresh*						
W3	Slightly weathered	Discoloration or oxidation is limited to surface of, or short distance from, fractures; some feldspar crystals are dull	Minor to complete discoloration or oxidation of most surfaces	No visible separation, intact (tight)	Preserved	Minor leaching of some soluble minerals may be noted	Hammer rings when crystalline rocks are struck. Body of rock not weakened. With few exceptions, such as siltstones or shales, classified as rock excavation.
W4	Moderately to slightly weathered*						
W5	Moderately weathered	Discoloration or oxidation extends from fractures usually throughout; Fe-Mg minerals are "rusty", feldspar crystals are "cloudy"	All fracture surfaces are discolored or oxidized	Partial separation of boundaries visible	Generally preserved	Soluble minerals may be mostly leached	Hammer rings when crystalline rocks are struck. Body of rock is slightly weakened. Depending on fracturing, usually is rock excavation except in naturally weak rocks such as siltstones or shales.
W6	Intensely to moderately weathered*						
W7	Intensely weathered	Discoloration or oxidation throughout; all feldspars and Fe-Mg minerals are altered to clay to some extent; or chemical alteration produces in situ disaggregation, see grain boundary conditions	All fracture surfaces are discolored or oxidized, surfaces friable	Partial separation, rock is friable; in semiarid conditions granitics are disaggregated	Texture altered by chemical disintegration (hydration, argillation)	Leaching of soluble minerals may be complete	Dull sound when struck with hammer, usually can be broken with moderate to heavy manual pressure or by light hammer blow without reference to planes of weakness such as incipient or hairline fractures, or veinlets. Rock is significantly weakened. Usually common excavation.
W8	Very intensely weathered						
W9	Decomposed	Discolored or oxidized throughout, but resistant minerals such as quartz may be unaltered; all feldspars and Fe-Mg minerals are completely altered to clay		Complete separation of grain boundaries (disaggregated)	Resembles a soil, partial or complete remnant rock structure may be preserved; leaching of soluble minerals usually complete		Can be granulated by hand. Always common excavation. Resistant minerals such as quartz may be present as "stringers" or "dikes".

Note: This chart and its horizontal categories are more readily applied to rocks with feldspars and mafic minerals. Weathering in various sedimentary rocks, particularly limestones and poorly indurated sediments, will not always fit the categories established. This chart and weathering categories may have to be modified for particular site conditions or alteration such as hydrothermal effects; however, the basic framework and similar descriptors are to be used.

* Combination descriptors are permissible where equal distribution of both weathering characteristics are present over significant intervals or where characteristics present are "in between" the diagnostic features. However, dual descriptors should not be used where significant, identifiable zones can be delineated. When given as a range, only two adjacent terms may be combined (i.e., decomposed-to-lightly weathered or moderately weathered to fresh) are not acceptable.

† Does not include directional weathering along shears or faults and their associated features. For example, a shear zone that carried weathering to great depths into a fresh rock mass would not require the rock mass to be classified as weathered.

§ These are generalizations and should not be used as diagnostic features for weathering or excavation classification. These characteristics vary to a large extent based on naturally weak materials or cementation and type of excavation.

ROCK HARDNESS/ STRENGTH DESCRIPTORS

Alphanumeric descriptor	Descriptor	Criteria
H1	Extremely hard	Core, fragment, or exposure cannot be scratched with knife or sharp pick; can only be chipped with repeated heavy hammer blows.
H2	Very hard	Cannot be scratched with knife or sharp pick. Core of fragment breaks with repeated heavy hammer blows.
H3	Hard	Can be scratched with knife or sharp pick with difficulty (heavy pressure). Heavy hammer blow required to break specimen.
H4	Moderately hard	Can be scratched with knife or sharp pick with light or moderate pressure. Core or fragment breaks with moderate hammer blow.
H5	Moderately soft	Can be grooved 1/16 inch (2 mm) deep by knife or sharp pick with moderate or heavy pressure. Core or fragment breaks with light hammer blow or heavy manual pressure.
H6	Soft	Can be grooved or gouged easily by knife or sharp pick with light pressure, can be scratched with fingernail. Breaks with light to moderate manual pressure.
H7	Very soft	Can be readily indented, grooved or gouged with fingernail, or carved with a knife. Breaks with light manual pressure.

Any bedrock unit softer than H7, very soft, is to be described using USBR 5000 consistency descriptors.

Note: Although "sharp pick" is included in these definitions, descriptions of ability to be scratched, grooved of gouged by a knife is the preferred criteria.

FRACTURE DENSITY

FRACTURE DENSITY - Based on the spacing of all natural fractures in an exposure or core recovery lengths in boreholes; excludes mechanical breaks, shears, and shear zones; however, shear-distributed zones (fracturing outside the shear) are included. Descriptors for fracture density apply to all rock exposures such as tunnel walls, dozer trenches, outcrops, or foundation cut slopes and inverts, as well as boreholes. Descriptive criteria presented below are based on borehole cores where lengths are measured along the core axis, for other exposures the criteria is distance measured between fractures (size of blocks).

UNFRACTURED (FD0) : No fractures.

VERY SLIGHTLY FRACTURED (FD1) : Core recovered mostly in lengths greater than 3 feet (1 m).

SLIGHTLY TO VERY SLIGHTLY FRACTURED (FD2)*

SLIGHTLY FRACTURED (FD3) : Core recovered mostly in lengths from 1 to 3 feet (300 to 1000 mm) with few scattered lengths less than 1 foot (300 mm) or greater than 3 feet (1000 mm).

MODERATELY TO SLIGHTLY FRACTURED (FD4)*

MODERATELY FRACTURED (FD5) : Core recovered mostly in 0.3 to 1.0 foot (100 to 300 mm) lengths with most lengths about 0.6 foot (200 mm)

INTENSELY TO MODERATELY FRACTURED (FD6)*

INTENSELY FRACTURED (FD7) : Lengths average from 0.1 to 0.3 foot (30 to 100 mm) with scattered fragmented intervals. Core recovered mostly in lengths less than 0.3 foot (100 mm).

VERY INTENSELY TO INTENSELY FRACTURED (FD8)*

VERY INTENSELY FRACTURED (FD9) : Core recovered mostly as chips and fragments with a few scattered short core lengths.

* Combinations of fracture densities (e.g. Very Intensely to Intensely Fractured or Moderately to Slightly Fractured) are used where equal distribution of both fracture density characteristics are presently over a significant interval or exposure, or where characteristics are "in between" the descriptor definitions.

BEDDING, FOLIATION, OR FLOW TEXTURE DESCRIPTORS

Descriptors	Thickness / Spacing
Massive	Greater than 10 ft (3 m)
Very thickly (bedded, foliated, or banded)	3 to 10 ft (1 to 3 m)
Thickly	1 to 3 ft (300 mm to 1 m)
Moderately	0.3 to 1 ft (100 to 300 mm)
Thinly	0.1 to 0.3 ft (30 to 100 mm)
Very thinly	0.03 (3/8 in) to 0.1 ft (10 to 30 mm)
Laminated (intensely foliated or banded)	Less than 0.03 ft (3/8 in) (<10 mm)

RQD LOGGING

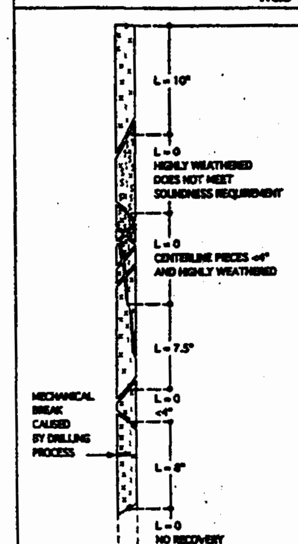

$$RQD = \frac{\sum \text{LENGTH OF SOUND CORE PIECES} > 4 \text{ INCHES (100 mm)}}{\text{TOTAL CORE RUN LENGTH}}$$

$$RQD = \frac{10 + 7.5 + 8}{48} \times 100\%$$

RQD = 53% (FAIR)

RQD (ROCK QUALITY DESIGNATION)	DESCRIPTION OF ROCK QUALITY
0 - 25%	VERY POOR
25 - 50%	POOR
50 - 75%	FAIR
75 - 90%	GOOD
90 - 100%	EXCELLENT

after Deere & Deere, 1989

STRUCTURAL FOUNDATIONS BRANCH - ENGINEERING SERVICE CENTER

As-Built Log of Test Borings sheet is considered an informational document only. As such, the State of California registration seal with signature, license number and registration certificate expiration date confirm that this is a true and accurate copy of the original document. It does not attest to the accuracy or validity of the information contained in the original document. This drawing is available and presented only for the convenience of any bidder, contractor or other interested party.

DIST.	COUNTY	ROUTE	KILOMETER POST - TOTAL PROJECT	Sheet No.	Total Sheets
04	CC,Sol	80	22.0/22.7,0.0/0.5	12	23

C. Michael Huyette — CERTIFIED ENGINEERING GEOLOGIST — 11-23-98 PLANS APPROVAL DATE

REGISTERED GEOLOGIST — C.M. HUYETTE — No. 2035 — Exp. 5-31-00 — CERTIFIED ENGINEERING GEOLOGIST — STATE OF CALIFORNIA

CARQUINEZ TEMPORARY TRESTLE PILE

LOG OF TEST BORINGS 1 OF 12

NOTE: A COPY OF THIS LOG OF TEST BORINGS IS AVAILABLE AT OFFICE OF STRUCTURE MAINTENANCE AND INVESTIGATIONS, SACRAMENTO, CALIFORNIA — CU: 04 EA: 0130D1 — BRIDGE No. 28-0352L

MEASUREMENTS SHOWN ARE NON-METRIC

DIST.	COUNTY	ROUTE	POST MILES TOTAL PROJECT	SHEET NO.	TOTAL SHEETS
04	CC/Sol	80			

R.W. Fox — REGISTERED ENGINEERING GEOLOGIST

PLANS APPROVAL DATE

REGISTERED GEOLOGIST — R.W. FOX — No. 78 — Exp. 8-31-97 — CERTIFIED ENGINEERING GEOLOGIST — STATE OF CALIFORNIA

THE STATE OF CALIFORNIA OR ITS OFFICERS OR AGENTS SHALL NOT BE RESPONSIBLE FOR THE ACCURACY OR COMPLETENESS OF ELECTRONIC COPIES OF THIS PLAN SHEET.

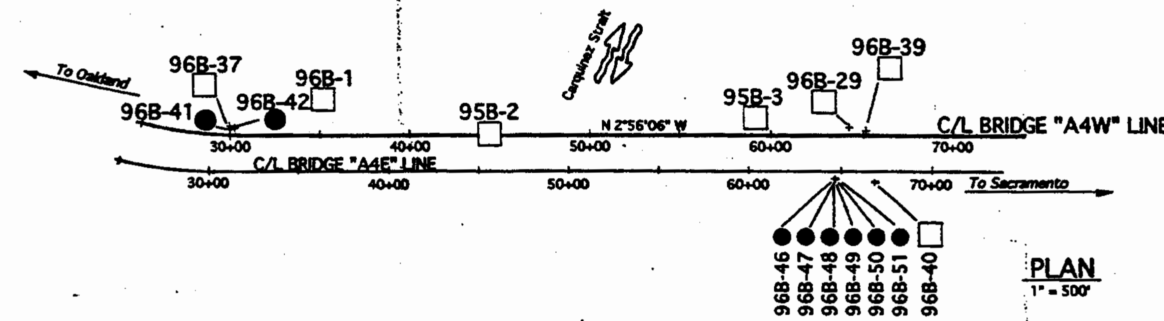

PLAN
1" = 500'

NOTES:

1. UNCONFINED COMPRESSIVE STRENGTH "qu" DETERMINED BY "POCKET PENETROMETER".
2. UNDRAINED SHEAR STRENGTH "Su" DETERMINED BY "TORVANE".
3. CONSISTENCY OF FINE GRAINED SOIL IS BASED ON "Su" & "qu", AS REFERENCE, OREGON DEPARTMENT OF TRANSPORTATION MANUAL WAS USED.
4. ROCK DESCRIPTION IS BASED ON STANDARD PRESENTED IN BUREAU OF RECLAMATION "ENGINEERING GEOLOGY FIELD MANUAL"
5. E= BLOW COUNT FOR ONE FOOT PENETRATION EXTRAPOLATED FROM BLOW COUNT FOR LESS THAN ONE FOOT (DUE TO CHANGE IN MATERIAL OR HARD DRIVING)
6. REC = % ROCK RECOVERY
7. RQD = % ROCK QUALITY DESIGNATION
8. LL = LIQUID LIMIT
   PI = PLASTICITY INDEX
9. FOR ADDITIONAL LABORATORY TEST RESULTS LOOK AT THE FINAL FOUNDATION RECOMMENDATIONS.
10. SOME MODIFICATIONS TO THE "LOGGED" LITHOLOGIC DESCRIPTIONS RECORDED AT THE TIME OF EXPLORATORY DRILLING BY CALTRANS WERE BASED ON INTERPRETATIONS AND FURTHER EVALUATION BY THE PROJECT GEOLOGIST, AND AS SUCH ARE SUBJECT TO INDIVIDUAL BELIEF, JUDGMENT AND CIRCUMSTANCE. THE ORIGINAL "RAW" FIELD LOGS ARE AVAILABLE FOR REVIEW BY CONTACTING THIS OFFICE AT (916) 227-7047.
11. SINCE VARIOUS CALTRANS PERSONNEL WERE INVOLVED IN CONDUCTING THE 1995 AND 1996 CALTRANS EXPLORATORY TEST PROGRAM, MUCH OF THE FIELD DATA AND LABORATORY TESTS PRESENTED ON THESE LOG OF TEST BORING SHEETS REFLECTS ONLY THE COMPILATION AND ORGANIZATION OF THEIR WORK BY THE PROJECT GEOLOGIST.

ENGINEERING SERVICE CENTER | STRUCTURE FOUNDATIONS

DRAWN BY Ken Wd 7/96
CHECKED BY

FIELD INVESTIGATION BY: Amaru, Carter, Felliberti, Gerami, Jensen, Leyva, Palmer, Pratt, Thomas, Valencia, Whitman, Wilcox Reviewed By: Komorniczak

State of CALIFORNIA DEPARTMENT OF TRANSPORTATION

DIVISION OF STRUCTURES
STRUCTURE DESIGN

BRIDGE NO. 23-15R/L
POST MILE

EARTHQUAKE RETROFIT PROJECT NO. SR-611

CARQUINEZ STRAIT BRIDGE MAIN SPANS

LOG OF TEST BORINGS 1 OF 12

ORIGINAL SCALE IN INCHES FOR REDUCED PLANS → 0 1 2 3

CU: 04
EA: 04391L

DISREGARD PRINTS BEARING EARLIER REVISION DATES →

REVISION DATES (PRELIMINARY STAGE ONLY)

SHEET 6 OF 17

TL-6051 REV. 5/95

24" ϕ TRESTLE PILES AS-BUILT

PILE	STATION (METER)	STATION OFFSET (METER)	TIP ELEVATION (FEET)	TIP ELEVATION (METER)
TB 1 - W	52 + 18.820	12.311 L	-93.2	-28.40
TB 1 - E	52 + 18.804	5.815 L	-84.6	-25.80
TB 2 - W	52 + 27.634	12.559 L	-92.8	-28.29
TB 2 - E	52 + 27.732	6.119 L	-82.6	-25.17
TB 3 - W	52 + 36.625	12.445 L	-101.6	-30.97
TB 3 - E	52 + 36.768	5.828 L	-92.1	-28.07
TB 4 - W	52 + 45.674	12.590 L	-106.1	-32.34
TB 4 - E	52 + 45.785	5.903 L	-88.1	-26.85
TB 5 - W	52 + 54.748	12.440 L	-105.1	-32.03
TB 5 - E	52 + 54.790	5.690 L	-91.1	-27.77
TB 6 - W	52 + 63.714	12.552 L	-105.1	-32.03
TB 6 - E	52 + 63.769	5.783 L	-89.1	-27.16
TB 7 - W	52 + 72.808	12.528 L	-101.1	-30.82
TB 7 - E	52 + 72.690	5.771 L	-96.1	-29.29
TB 8 - W	52 + 81.698	12.477 L	-105.1	-32.03
TB 8 - E	52 + 81.688	5.745 L	-101.1	-30.82
TB 9 - W	52 + 90.670	12.509 L	-111.1	-33.86
TB 9 - E	52 + 90.781	5.733 L	-96.1	-29.29
TB 10 - W	52 + 99.700	12.584 L	-92.6	-28.22
TB 10 - E	52 + 99.757	5.771 L	-85.3	-26.00
TB 11 - W	53 + 08.690	12.622 L	-89.6	-27.31
TB 11 - E	53 + 08.733	5.828 L	-85.6	-26.09
TB 12 - W	53 + 17.770	12.609 L	-91.1	-27.77
TB 12 - E	53 + 17.764	5.809 L	-91.1	-27.77
TB 13 - W	53 + 26.680	12.543 L	-88.9	-27.10
TB 13 - E	53 + 26.691	5.815 L	-91.6	-27.92
TB 14 - W	53 + 35.727	12.571 L	-99.1	-30.21
TB 14 - E	53 + 35.816	5.849 L	-98.1	-29.90
TB 15 - W	53 + 44.734	12.528 L	-106.0	-32.31
TB 15 - E	53 + 44.828	5.804 L	-114.0	-34.75
TB 16 - E1	53 + 53.773	7.225 L	-128.0	-39.01
TB 16 - E2	53 + 53.717	3.277 L	-130.9	-39.90
TB 16 - W1	53 + 53.747	11.145 L	-121.4	-37.00
TB 16 - W2	53 + 53.823	15.117 L	-121.1	-36.91
TB 17 - E1	53 + 58.681	7.185 L	-131.0	-39.93
TB 17 - E2	53 + 58.914	3.255 L	-127.4	-38.83
TB 17 - W1	53 + 53.804	11.197 L	-130.3	-39.72
TB 17 - W2	53 + 58.741	15.116 L	-129.5	-39.47

ATTACHMENT 1

24" ϕ SPUD PILES AS-BUILT

PILE	STATION (METER)	STATION OFFSET (METER)	TIP ELEVATION (FEET)	TIP ELEVATION (METER)
WS - 1	53 + 53.054	17.040 L	-115.2	-35.11
WS - 2	53 + 53.033	21.398 L	-120.0	-36.58
WS - 3	53 + 52.992	25.804 L	-122.0	-37.19
WS - 4	53 + 52.964	30.006 L	-128.3	-39.11
WS - 5	53 + 53.143	34.381 L	-125.5	-38.25
WS - 6	53 + 53.992	35.878 L	-126.5	-38.56
WS - 7	53 + 58.464	35.907 L	-131.4	-40.05
WS - 8	53 + 62.956	35.919 L	-125.8	-38.34
WS - 9	53 + 67.544	35.854 L	-128.3	-39.11
ES - 1	53 + 53.043	1.371 L	-115.2	-35.11
ES - 2	53 + 53.245	3.020 R	-126.4	-38.53
ES - 3	53 + 53.160	7.326 R	-129.9	-39.59
ES - 4	53 + 53.111	11.527 R	-128.3	-39.11
ES - 5	53 + 53.127	15.981 R	-124.9	-38.07
ES - 6	53 + 54.091	17.514 R	-121.3	-36.97
ES - 7	53 + 58.550	17.549 R	-131.3	-40.02
ES - 8	53 + 63.167	17.774 R	-135.3	-41.24
ES - 9	53 + 67.539	17.491 R	-144.1	-43.92

AS BUILT PLANS
Corrections by
Date 3/17/95

TEMPORARY TRESTLE PROJECT
Contract No. 04-0130D4

Hammer Make: Conmaco
Model : Steam
E = 60,000 ft-lb
Blow/ft at req'd bearing = 60 @ 3-ft stroke

AS-BUILTS FOR DEEP WATER PILES:

Pile Locations	(1) Length of pile (feet)	(2) Date Complete	(3) Blows per foot	(4) Approx. OG elev. (meter)	(5) Length of cut-off (feet)	(6) Actual length in ground	(7) Top of pile elev. (survey by Manson)	(8) Cut-off (meter)	(9) Actual Pile Tip (feet)	(10) Actual Pile Tip (meter)	(11) Design Tip (meter)	(12) Approx. Tip (meter)
TB 15 - E	155.5	2/4/99	97	-2	33.6	107.4	41.5	2.40	-114.0	-34.75	-27.5	-44
TB 15 - W	155.5	2/4/99	131	-2	41.6	99.4	49.5	2.40	-106.0	-32.31	-27.5	-44
TB 16 - E1	155.5	2/6/99	89	-3.1	19.6	117.8	27.5	2.40	-128.0	-39.01	-28	-45
TB 16 - E2	155.5	2/6/99	84	-3.1	16.7	120.7	24.6	2.40	-130.9	-39.90	-28	-45
TB 16 - W1	155.5	2/6/99	85	-2	26.2	114.8	34.1	2.40	-121.4	-37.00	-28	-45
TB 16 - W2	155.5	2/5/99	92	-2	26.5	114.5	34.4	2.40	-121.1	-36.91	-28	-45
TB 17 - E1	155.5	2/8/99	83	-3.5	16.6	119.5	24.5	2.40	-131.0	-39.93	-29	-45
TB 17 - E2	155.5	2/8/99	85	-3.5	20.2	115.9	28.1	2.40	-127.4	-38.83	-29	-45
TB 17 - W1	155.5	2/6/99	85	-3.5	17.3	118.8	25.2	2.40	-130.3	-39.72	-29	-45
TB 17 - W2	155.5	2/6/99	86	-3.5	18.1	118.0	26.0	2.40	-129.5	-39.47	-29	-45
WS - 1	155.5	2/5/99	94	-2	32.4	108.6	40.3	2.40	-115.2	-35.11	-28	-45
WS - 2	155.5	2/5/99	85	-2	27.6	113.4	35.5	2.40	-120.0	-36.58	-28	-45
WS - 3	155.5	2/5/99	87	-2	25.6	115.4	33.5	2.40	-122.0	-37.19	-28	-45
WS - 4	155.5	2/5/99	87	-2	19.3	121.7	27.2	2.40	-128.3	-39.11	-28	-45
WS - 5	155.5	2/4/99	86	-2	22.1	118.9	30.0	2.40	-125.5	-38.25	-28	-45
WS - 6	155.5	2/4/99	85	-2	21.1	119.9	29.0	2.40	-126.5	-38.56	-28	-45
WS - 7	155.5	2/4/99	84	-2.5	16.2	123.2	24.1	2.40	-131.4	-40.05	-29	-45
WS - 8	155.5	2/8/99	85	-2.9	21.8	116.3	29.7	2.40	-125.8	-38.34	-29	-45
WS - 9	155.5	2/8/99	95	-3.9	19.3	115.5	27.2	2.40	-128.3	-39.11	-29	-45
ES - 1	155.5	2/5/99	99	-3.1	22.2	115.2	30.1	2.40	-125.4	-38.22	-28	-45
ES - 2	155.5	2/3/99	86	-3.1	21.2	116.2	29.1	2.40	-126.4	-38.53	-28	-45
ES - 3	155.5	2/3/99	79	-3.1	17.7	119.7	25.6	2.40	-129.9	-39.59	-28	-45
ES - 4	150.5	2/3/99	85	-3.1	14.3	118.1	22.2	2.40	-128.3	-39.11	-28	-45
ES - 5	150.5	2/3/99	95	-3.1	17.7	114.7	25.6	2.40	-124.9	-38.07	-28	-45
ES - 6	155.5	2/2/99	89	-3.1	26.3	111.1	34.2	2.40	-121.3	-36.97	-28	-45
ES - 7	155.5	2/2/99	95	-4.5	16.3	116.5	24.2	2.40	-131.3	-40.02	-29	-45
ES - 8	155.5	2/2/99	81	-6.25	12.3	114.8	20.2	2.40	-135.3	-41.24	-29	-45
ES - 9	155.5	2/1/99	95	-7.1	3.5	120.8	11.4	2.40	-144.1	-43.92	-29	-45

AS BUILT PLANS
Corrections by
Date 3/17/99

Note:
(4) was approximated from the plans
(5) = (1) - (8)*3.2808 - ABS(9)
(6) = ABS((9)-(4)*3.2808)
(7) was surveyed by Manson Construction Co. (submittal dated 2/11/99)
(9) = (7) - (1)
(10) = (9)*3.2808

Calculated By:_____
Checked By:_____

ATTACHMENT 2