DIST	COUNTY	ROUTE	POST MILES TOTAL PROJECT	SHEET No.	TOTAL SHEETS
X	X	X	X	X	X

REGISTERED CIVIL ENGINEER X DATE

PLANS APPROVAL DATE

REGISTERED PROFESSIONAL ENGINEER No. X X X EXP. CIVIL STATE OF CALIFORNIA

The State of California or its officers or agents shall not be responsible for the accuracy or completeness of electronic copies of this plan sheet.

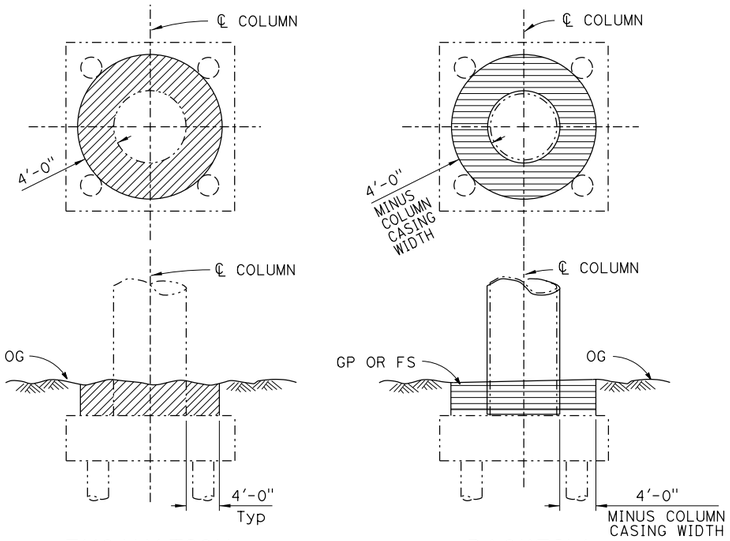

EXCAVATION BACKFILL

NOTE: CIRCULAR COLUMN SHOWN. RECTANGULAR, SQUARE OR OVAL COLUMNS SIMILAR

COLUMN CASING ONLY

1/8" = 1'-0"

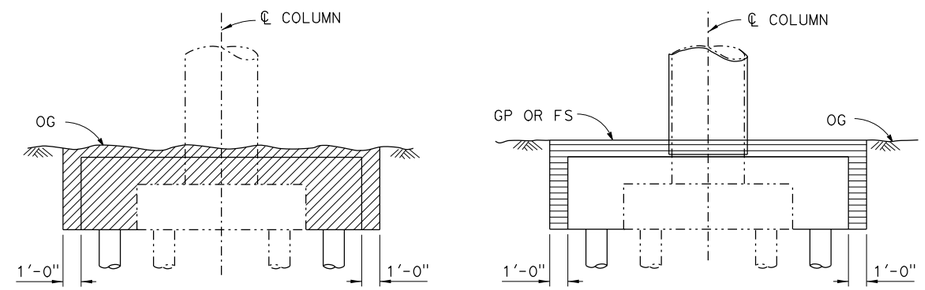

EXCAVATION BACKFILL

COLUMN CASING & FOOTING RETROFIT

1/4" = 1'-0"

LEGEND:

- Indicates existing structure
- Indicates new construction
- Indicates structure excavation
- Indicates structure backfill

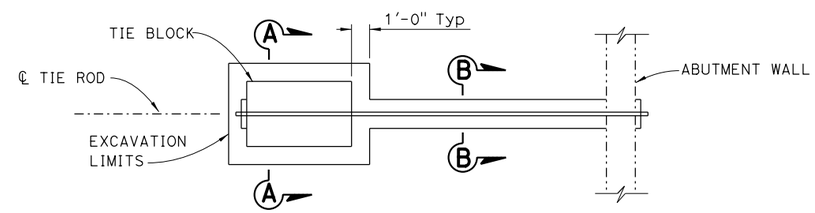

PLAN VIEW - TIE ROD ANCHOR

1/4" = 1'-0"

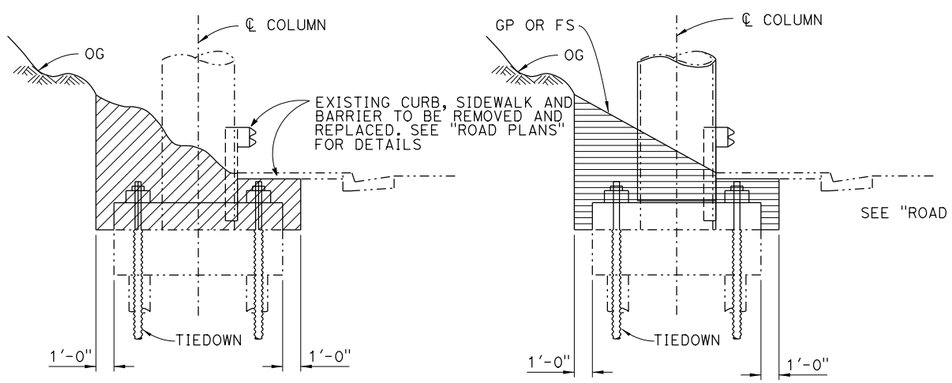

EXCAVATION BACKFILL

BENT FOOTING TIE-DOWNS

1/4" = 1'-0"

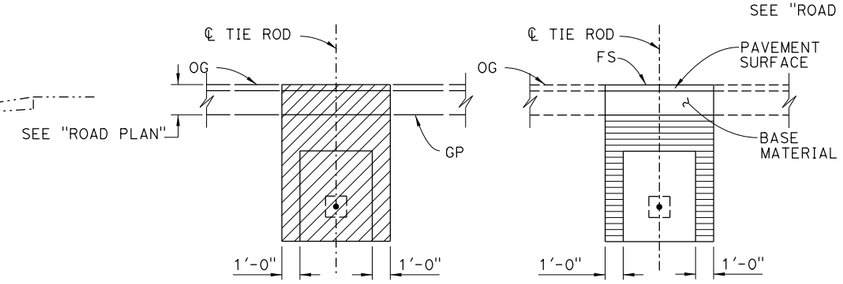

EXCAVATION BACKFILL

SECTION A-A

1/4" = 1'-0"

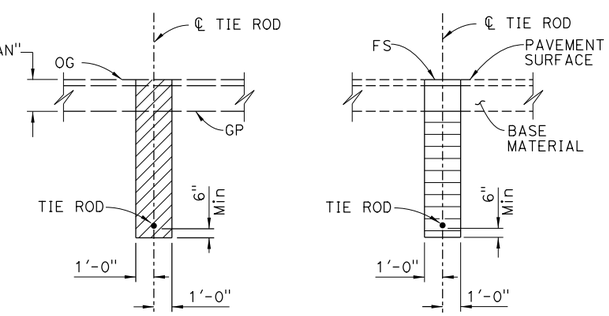

EXCAVATION BACKFILL

SECTION B-B

1/4" = 1'-0"

STANDARD DRAWING		STATE OF CALIFORNIA DEPARTMENT OF TRANSPORTATION	DIVISION OF ENGINEERING SERVICES	BRIDGE NO. X / POST MILE X	X
FILE NO. xs7-030	APPROVAL DATE July 2014				LIMITS OF PAYMENT FOR EXCAVATION AND BACKFILL

DS OSD 2147A (ENGLISH STANDARD DRAWING "XS" BORDER REV. (02-02-11)

ORIGINAL SCALE IN INCHES FOR REDUCED PLANS 0 1 2 3

UNIT: X
PROJECT NUMBER & PHASE: X
CONTRACT NO.: X

DISREGARD PRINTS BEARING EARLIER REVISION DATES

REVISION DATES 4-14-14 SHEET X OF X

FILE => xs7-030.dgn

USERNAME => s136236 DATE PLOTTED => 19-JUN-2014 TIME PLOTTED => 16:56