DIST	COUNTY	ROUTE	POST MILES TOTAL PROJECT	SHEET No.	TOTAL SHEETS
X	X	X	X	X	X

REGISTERED CIVIL ENGINEER X DATE

PLANS APPROVAL DATE

REGISTERED PROFESSIONAL ENGINEER X No. X Exp. X CIVIL STATE OF CALIFORNIA

The State of California or its officers or agents shall not be responsible for the accuracy or completeness of electronic copies of this plan sheet.

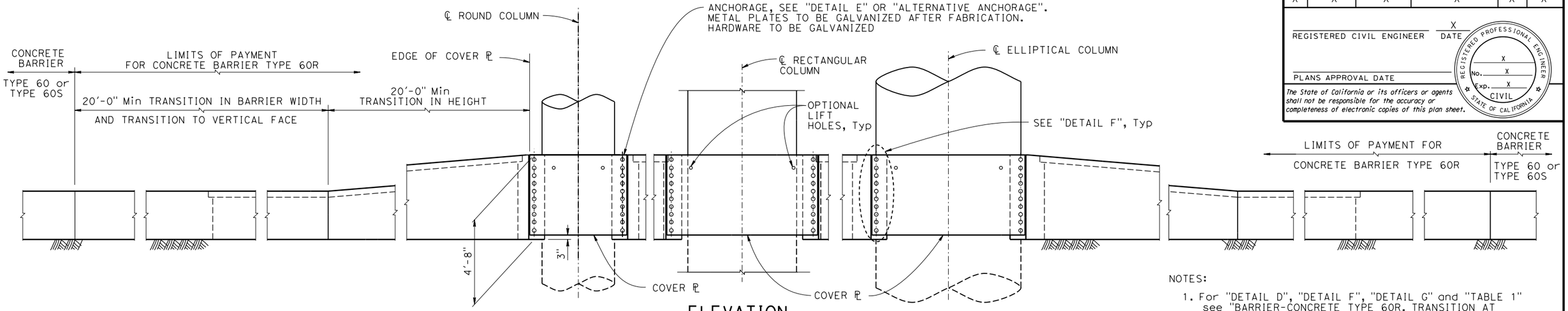

ELEVATION

3/8" = 1'-0"

NOTES:

1. For "DETAIL D", "DETAIL F", "DETAIL G" and "TABLE 1" see "BARRIER-CONCRETE TYPE 60R, TRANSITION AT BRIDGE COLUMN - DETAILS NO. 2" sheet
2. For cover plate length see "TABLE 1" on "TRANSITION AT BRIDGE COLUMN-DETAILS NO. 2" sheet
3. Adjust height of concrete barriers wall on low side of offset or superelevated roadways to provide level grade across top of concrete barrier cap.

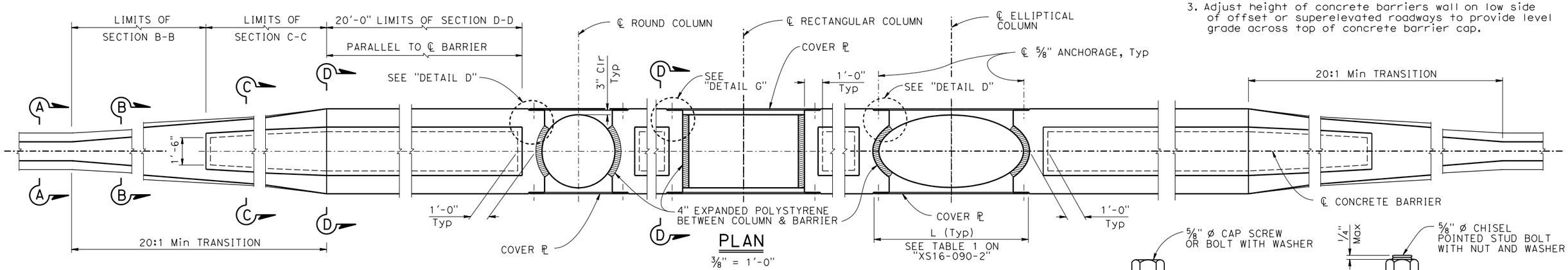

PLAN

3/8" = 1'-0"

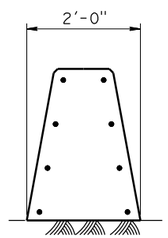

SECTION A-A

3/4" = 1'-0"

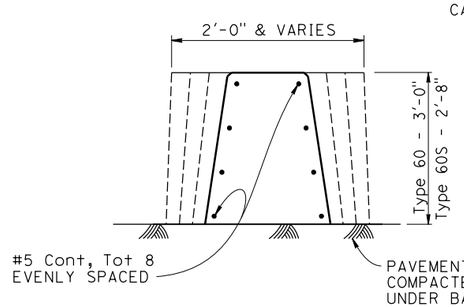

SECTION B-B

3/4" = 1'-0"

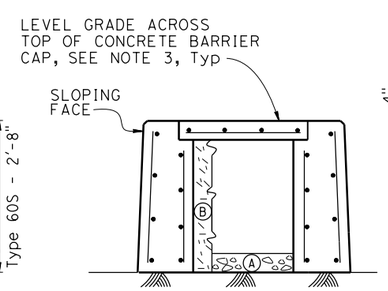

SECTION C-C

3/4" = 1'-0"

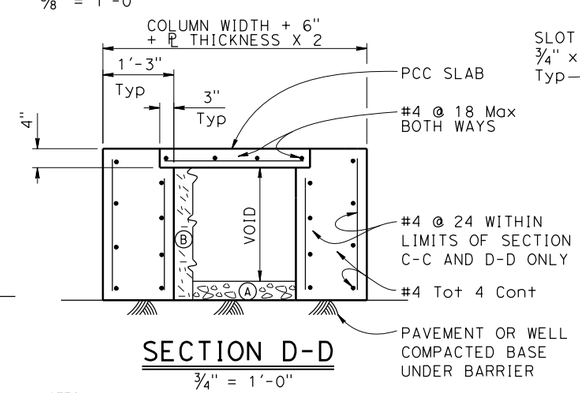

SECTION D-D

3/4" = 1'-0"

NOTES:

1. Contractor options for fill between barrier walls
   - (A) Place 4" PCC at base between barrier walls
   - (B) Place granular material from base to bottom of 4" cap

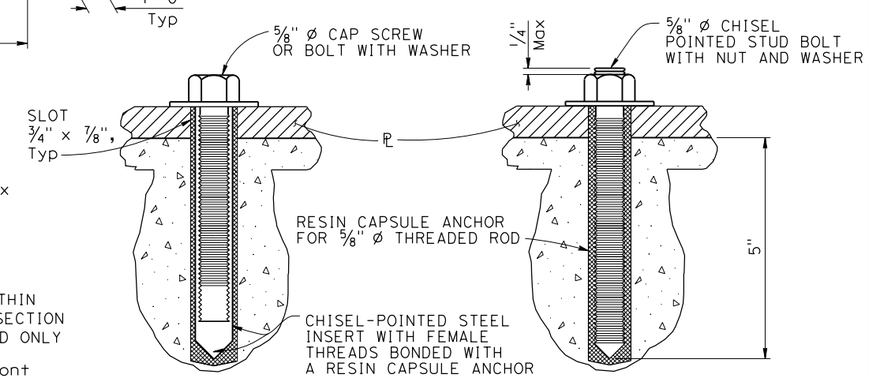

ALTERNATIVE A

ALTERNATIVE B

ALTERNATIVE ANCHORAGE

NO SCALE

STANDARD DRAWING

FILE NO. xs16-090-1

APPROVAL DATE July 2014

STATE OF CALIFORNIA DEPARTMENT OF TRANSPORTATION

DIVISION OF ENGINEERING SERVICES

BRIDGE NO. X

POST MILE X

X

CONCRETE BARRIER TYPE 60R TRANSITION AT BRIDGE COLUMN-DETAILS No. 1

DS OSD 2147A (ENGLISH STANDARD DRAWING "XS" BORDER REV. (02-02-11)

ORIGINAL SCALE IN INCHES FOR REDUCED PLANS 0 1 2 3

UNIT: X
PROJECT NUMBER & PHASE: X
CONTRACT NO.: X

DISREGARD PRINTS BEARING EARLIER REVISION DATES

REVISION DATES 6-26-14

SHEET X OF X

FILE => $REQUEST

USERNAME => $USER DATE PLOTTED => $DATE TIME PLOTTED => $TIME