DIST	COUNTY	ROUTE	KILOMETER POST TOTAL PROJECT	SHEET NO.	TOTAL SHEETS

Caltrans Metric

REGISTERED CIVIL ENGINEER

October 26, 2000
PLANS APPROVAL DATE

REGISTERED PROFESSIONAL ENGINEER Jeffrey B. Woody No. C41260 Exp. 3-31-03 CIVIL STATE OF CALIFORNIA

The State of California or its officers or agents shall not be responsible for the accuracy or completeness of electronic copies of this plan sheet.

To accompany plans dated _____

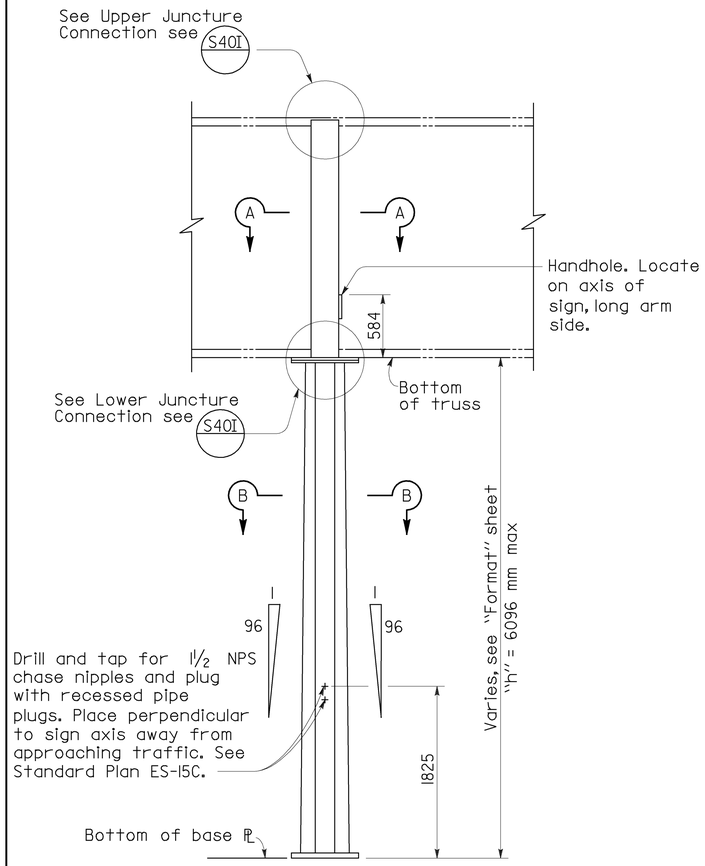

ELEVATION

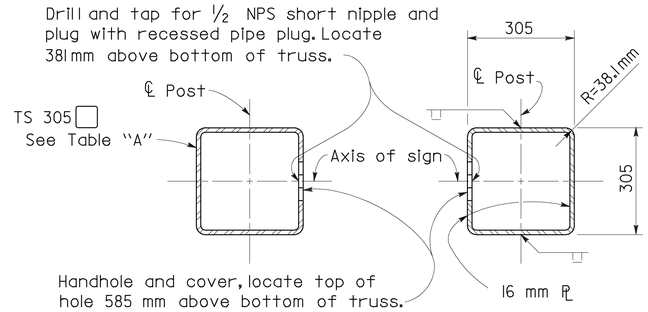

TYPE F-1 THRU F-3 TYPE F-4 AND F-5

SECTION A-A

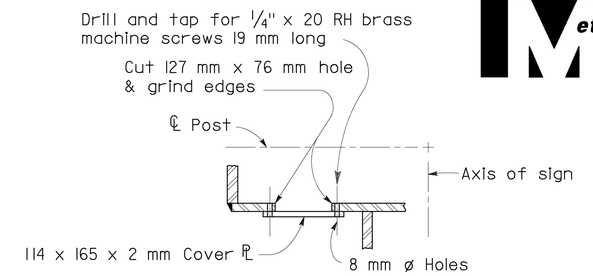

NOTE

Face handhole away from traveled way. On F-1 type post locate handhole on centerline post in Plate "A".

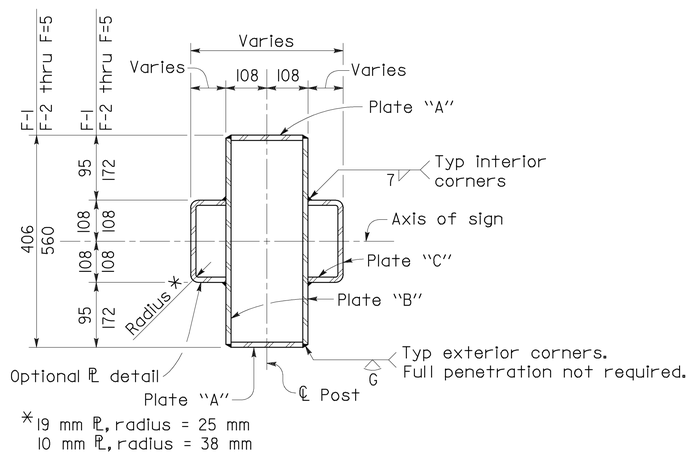

SECTION B-B

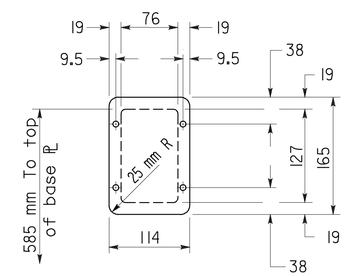

NOTE

For foundation details see S39

HANDHOLE AND COVER DETAIL

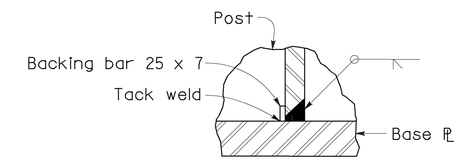

PLATES A, B AND C POST TO BASE PLATE WELDING DETAILS

TABLE "A"						
Post Type	Plate "A" (mm)	Plate "B" (mm)	Plate "C" (mm)	Base Plate (mm)	* Anchor Bolts No & Dia	Structural Tube
F-1	6.4x204	6.4	6.4	51x762x915	8-51 mm ø	305x305x7.9
F-2	12.7x204	6.4	6.4	51x762x915	12-45 mm ø	305x305x9.5
F-3	38.1x204	6.4	6.4	51x762x915	12-51 mm ø	305x305x12.7
F-4	38.1x197	9.5	9.5	64x762x915	12-57 mm ø	See Section A-A
F-5	38.1x178	19.1	19.1	70x762x915	12-57 mm ø	

* 51 mm Φ Anchor bolts may be substituted for 45 mm Φ bolts.

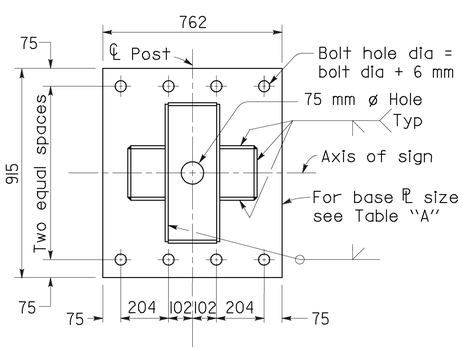

TYPE F-1

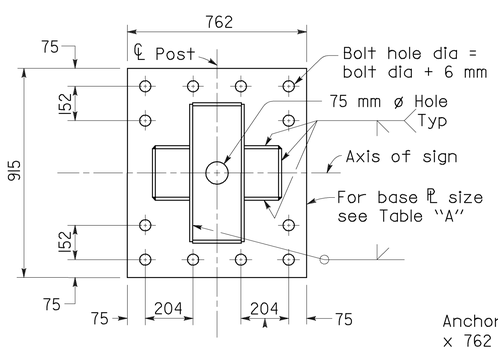

TYPE F-2 THRU F-5

BASE PLATE DETAILS

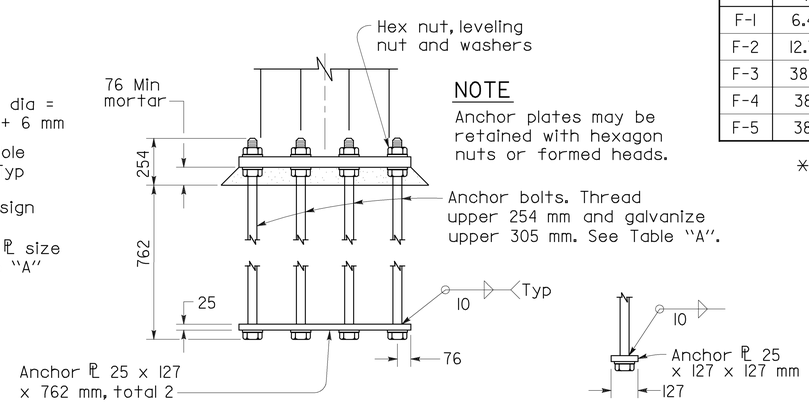

NOTE

Anchor plates may be retained with hexagon nuts or formed heads.

SINGLE SIDE BOLT

ANCHORAGE DETAILS

STATE OF CALIFORNIA
DEPARTMENT OF TRANSPORTATION

OVERHEAD SIGNS-BOX BEAM CLOSED TRUSS SINGLE POST BUTTERFLY POST DETAILS

NO SCALE

ALL DIMENSIONS ARE IN MILLIMETERS UNLESS OTHERWISE SHOWN

RSP S40M DATED OCTOBER 26, 2000 SUPERSEDES STANDARD PLAN S40M DATED JULY 1, 1999-PAGE 255 OF THE STANDARD PLANS BOOK DATED JULY 1999.

REVISED STANDARD PLAN RSP S40M

1999 STD. PLAN RSP S40M