DIST	COUNTY	ROUTE	KILOMETER POST TOTAL PROJECT	SHEET NO.	TOTAL SHEETS

Caltrans Metric

Jeffrey B. Woody
REGISTERED CIVIL ENGINEER

October 26, 2000
PLANS APPROVAL DATE

REGISTERED PROFESSIONAL ENGINEER Jeffrey B. Woody No. C41260 Exp. 3-31-03 CIVIL STATE OF CALIFORNIA

The State of California or its officers or agents shall not be responsible for the accuracy or completeness of electronic copies of this plan sheet.

To accompany plans dated _____

TABLE XIV

Post Type	Pipe Size NPS	Pipe Size Wall Thickness (mm)	Split (mm)	Base Plate Size (See Note 3) (mm)	Anchor Bolts (mm)	Pedestal Size (See Note 3) (mm)	Footing Size (See Note 3) meter x meter	Longitudinal Footing Reinforcement Top	Longitudinal Footing Reinforcement Bottom	J Bars
I-S	14	12.70	127	890 x 788 x 51	8-57 ø	1075 x 975	2.5 x 4.3	8-#16 bars	8-#29 bars	#29
II-S	16	12.70	152	890 x 788 x 51	8-57 ø	1075 x 975	2.5 x 4.3	8-#16 bars	8-#29 bars	#29
III-S	18	12.70	178	940 x 840 x 51	8-57 ø	1125 x 1025	2.5 x 4.9	8-#16 bars	8-#29 bars	#29
IV-S	20	12.70	204	1042 x 840 x 51	8-57 ø	1225 x 1025	2.8 x 5.2	9-#16 bars	9-#32 bars	#32
V-S	24	12.70	204	1143 x 991 x 51	8-57 ø	1350 x 1200	3.1 x 5.5	10-#19 bars	10-#36 bars	#36
VI-S or VII-S	24	24.60	204	1143 x 991 x 51	8-64 ø	1350 x 1200	3.7 x 6.1	13-#36 bars	13-#36 bars	#36

NOTES

1. For "General Notes" see Standard Plan S1.
2. Longer sides of base plates, pedestals and footings; shall be normal to axis of sign.
3. Backfill shall be in place prior to erection of post.
4. Thread upper 200 mm of anchor bolts and galvanize upper 300 mm.
5. Spread footing shown, use pile foundation when shown on the Project Plans.
6. Anchor plates may be retained with hex nut or formed head as an alternative to details shown.
7. When foundation is located on a steep slope with exposed face of concrete adjacent to traffic, see "Detail C" on Standard Plan S13.
8. Slope protection required when indicated on Project Plans.

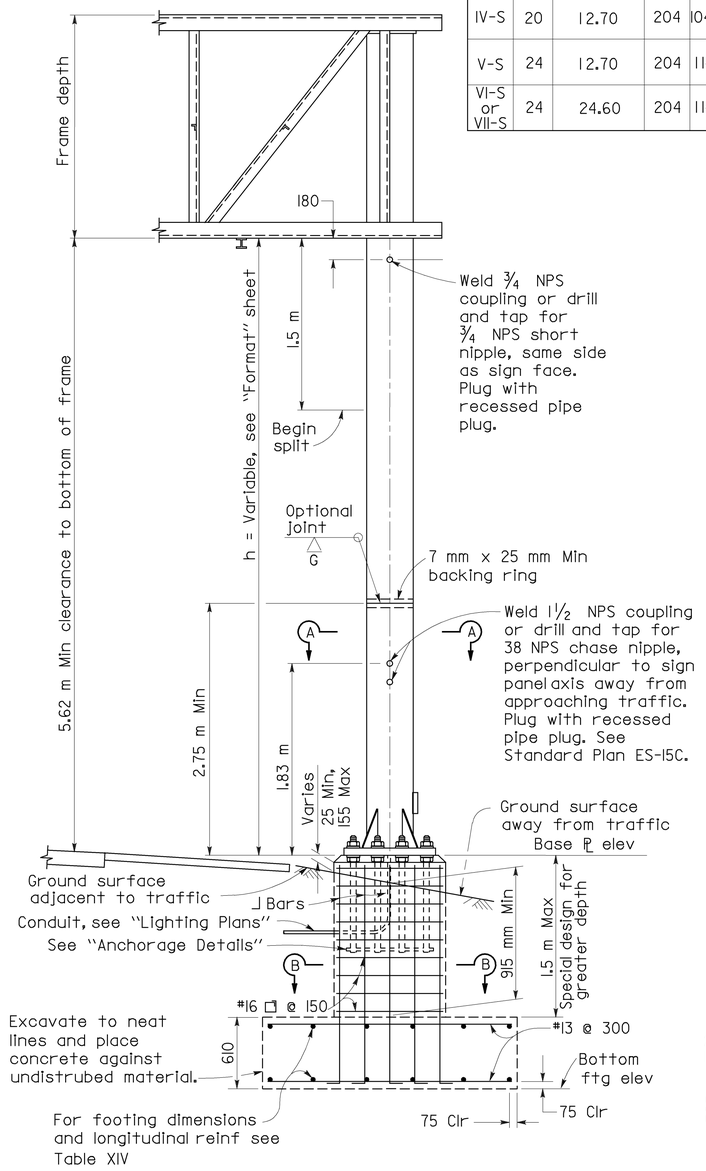

ELEVATION

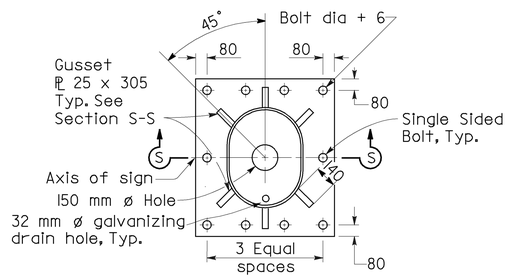

8 BOLT TYPE

TYPICAL BASE PLATE

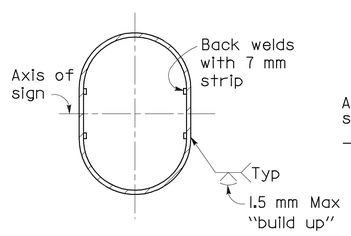

SECTION A-A

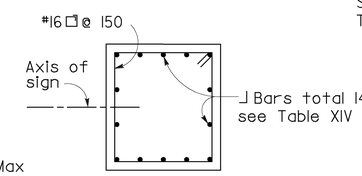

SECTION B-B

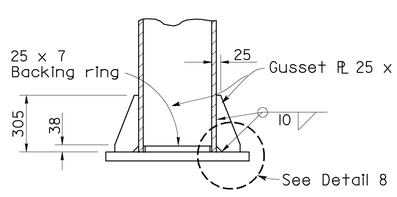

SECTION S-S

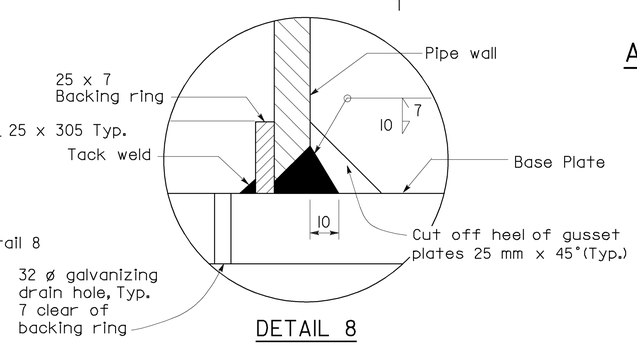

DETAIL 8

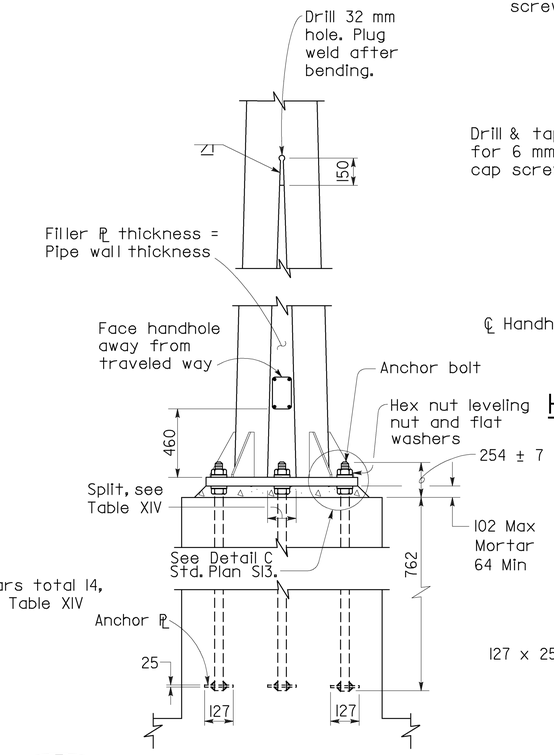

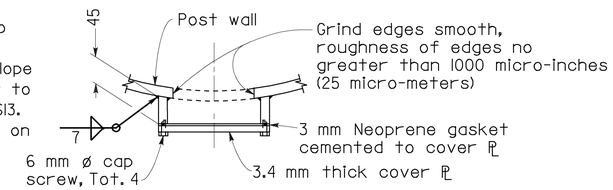

PLAN

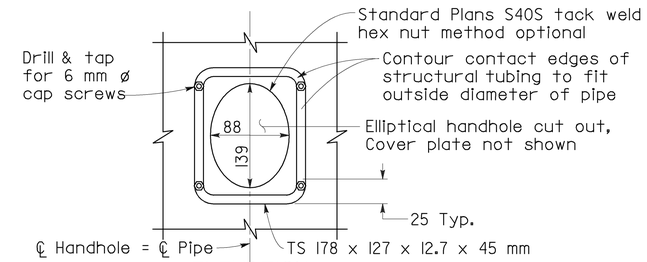

ELEVATION

TYPICAL DETAILS OF HANDHOLE AND COVER

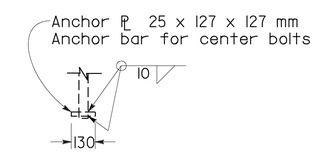

SINGLE SIDE BOLT

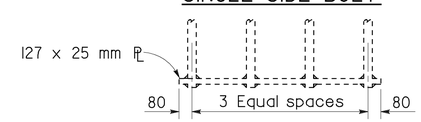

8 BOLT TYPE

ANCHORAGE DETAILS

STATE OF CALIFORNIA
DEPARTMENT OF TRANSPORTATION

OVERHEAD SIGNS-TRUSS TWO POST TYPE POST TYPES I-S THROUGH VII-S

NO SCALE

ALL DIMENSIONS ARE IN MILLIMETERS UNLESS OTHERWISE SHOWN

RSP S3 DATED OCTOBER 26, 2000 SUPERSEDES STANDARD PLAN S3 DATED JULY 1, 1999-PAGE 220 OF THE STANDARD PLANS BOOK DATED JULY 1999.

REVISED STANDARD PLAN RSP S3

1999 REVISED STD. PLAN RSP S3