DIST	COUNTY	ROUTE	KILOMETER POST TOTAL PROJECT	SHEET NO.	TOTAL SHEETS

Caltrans Metric

REGISTERED CIVIL ENGINEER

October 26, 2000
PLANS APPROVAL DATE

REGISTERED PROFESSIONAL ENGINEER Jeffrey B. Woody No. C41260 Exp. 3-31-03 CIVIL STATE OF CALIFORNIA

The State of California or its officers or agents shall not be responsible for the accuracy or completeness of electronic copies of this plan sheet.

To accompany plans dated _____

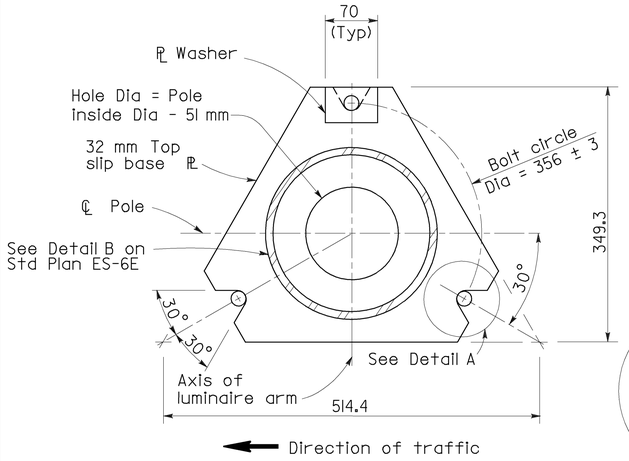

BASE PLATE

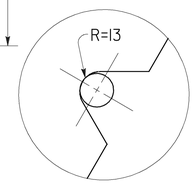

DETAIL A

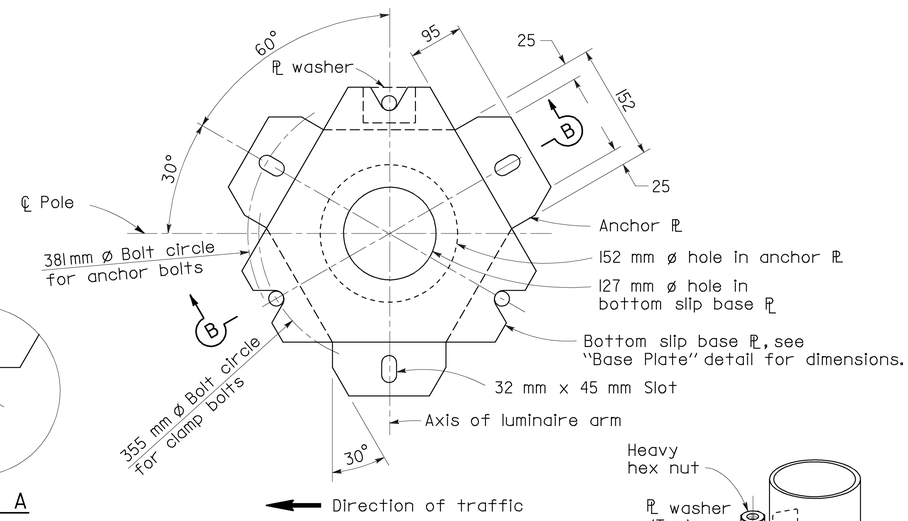

BOTTOM PLATES

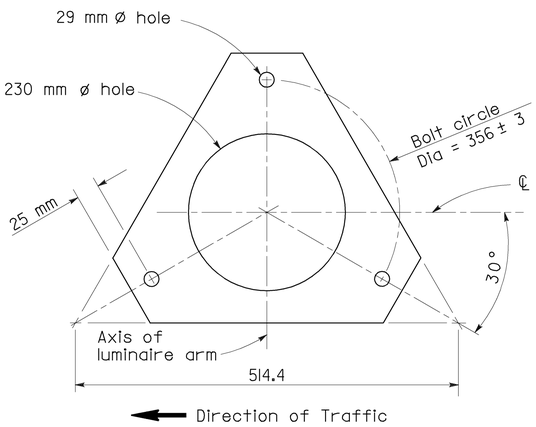

KEEPER PLATE

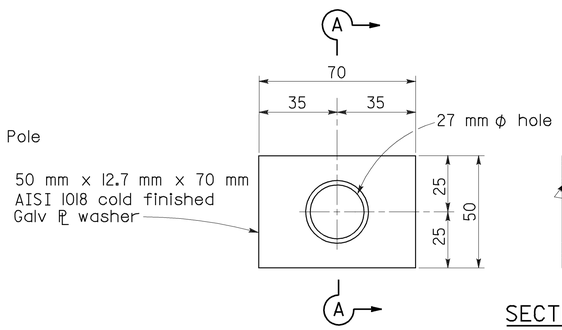

PLATE WASHER

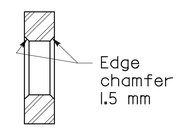

SECTION A-A

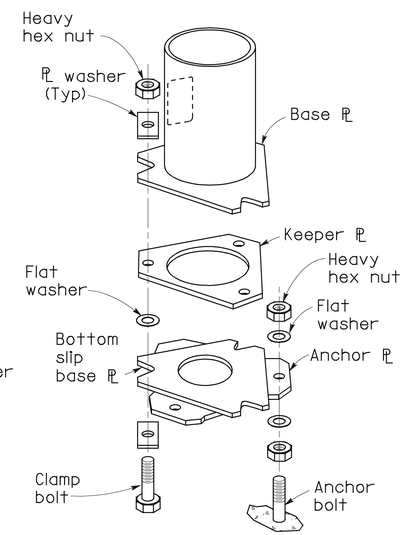

SLIP BASE DETAIL

ELEVATION

NOTES

1. M24X3 HS anchor bolts, wrench tighten, torque requirements waived. For clamp bolts, see specifications.
2. Conduit shall not protrude more than 50 mm above top of foundation.
3. Locate handhole on downstream side of traffic.
4. For Type 30 fixed base, use Type 22 foundation and base plate details. For Type 31 fixed base, use Type 32 foundation and base plate details.

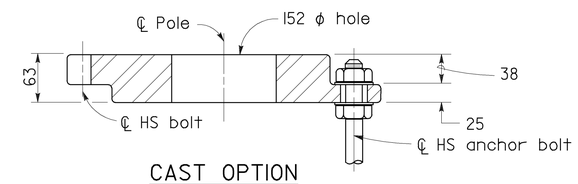

CAST OPTION

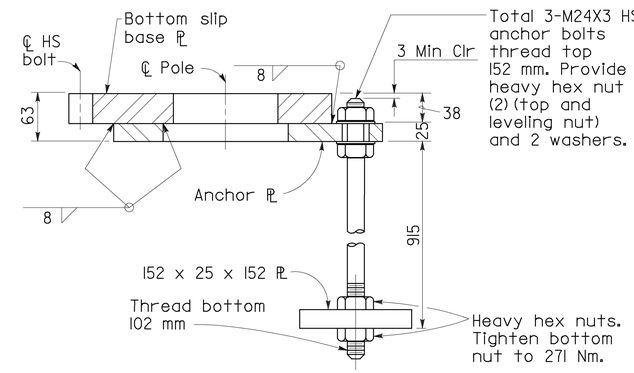

WELDED OPTION

SECTION B-B

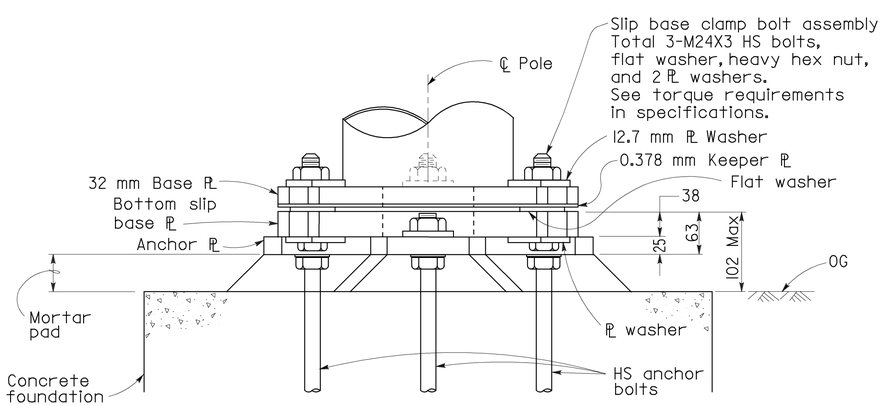

ELEVATION - SLIP BASE

STATE OF CALIFORNIA
DEPARTMENT OF TRANSPORTATION

LIGHTING STANDARDS TYPES 30 AND 31 BASE PLATE DETAILS

NO SCALE

ALL DIMENSIONS ARE IN MILLIMETERS UNLESS OTHERWISE SHOWN

RSP ES-6F DATED OCTOBER 26, 2000 SUPERSEDES STANDARD PLAN ES-6F DATED JULY 1, 1999-PAGE 294 OF THE STANDARD PLANS BOOK DATED JULY 1999.

REVISED STANDARD PLAN RSP ES-6F

1999 REVISED STD. PLAN RSP ES-6F