DIST	COUNTY	ROUTE	KILOMETER POST TOTAL PROJECT	SHEET NO.	TOTAL SHEETS

Caltrans Metric

REGISTERED CIVIL ENGINEER

October 26, 2000
PLANS APPROVAL DATE

REGISTERED PROFESSIONAL ENGINEER Overcomer Y. Hor No. C45803 Exp. 12-31-02 CIVIL STATE OF CALIFORNIA

The State of California or its officers or agents shall not be responsible for the accuracy or completeness of electronic copies of this plan sheet.

To accompany plans dated _____

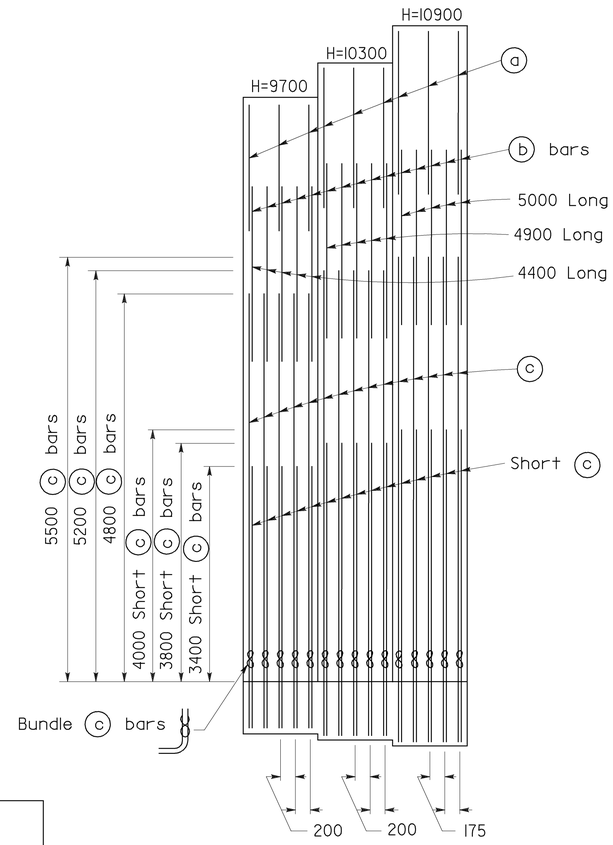

ELEVATION

TABLE OF REINFORCING STEEL, DIMENSIONS AND DATA				
Design H		9700	10300	10900
W		5600	5900	6200
C		1800	1900	2000
B		3800	4000	4200
F Spread Footing		1000	1100	1200
Batter		100:8	100:8	100:8
ⓐ bars		#19@400	#19@400	#19@350
ⓑ bars		#29@200	#29@200	#29@175
ⓒ bars		#36@200 ∞	#36@200 ∞	#36@175 ∞
ⓓ bars		#29@200 ∞	#29@200 ∞	#29@175 ∞
Total ⓔ bars		6-#19	6-#19	6-#19
Total ⓕ bars		4-#16	4-#16	4-#16
Loading Case I	H Comp kN	110	125	140
	V Comp kN	265	300	330
	Toe Pr. kPa	300	325	350
Loading Case II	H Comp kN	165	185	210
	V Comp kN	365	410	455
	Toe Pr. kPa	370	400	435
Loading Case III	H Comp kN	130	145	160
	V Comp kN	295	330	370
	Toe Pr. kPa	380	400	425

∞ Denotes a bundle of 2 bars.

NOTES

1. For details not shown and drainage notes see B3-8
2. For wall stem joint details, see B0-3/3-3 and B0-3/3-4
3. At ⓒ and Short ⓒ bars:
   H ≤ 1800 mm, no splices are allowed within 500 mm above the top of footing.
   H > 1800 mm, no splices are allowed within H/4 above the top of footing.

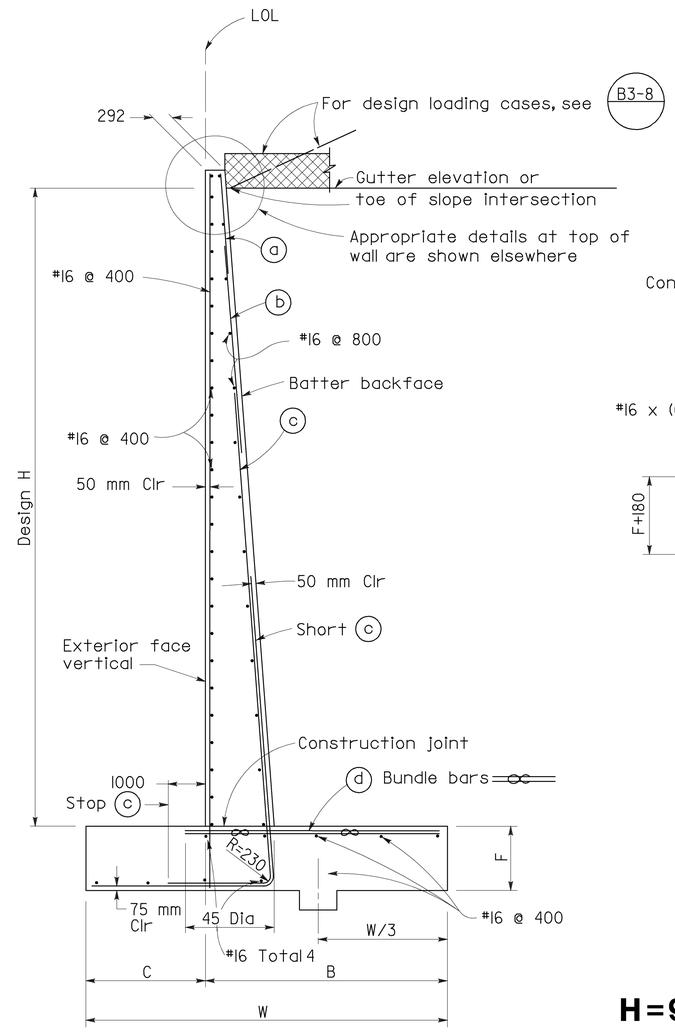

SPREAD FOOTING SECTION

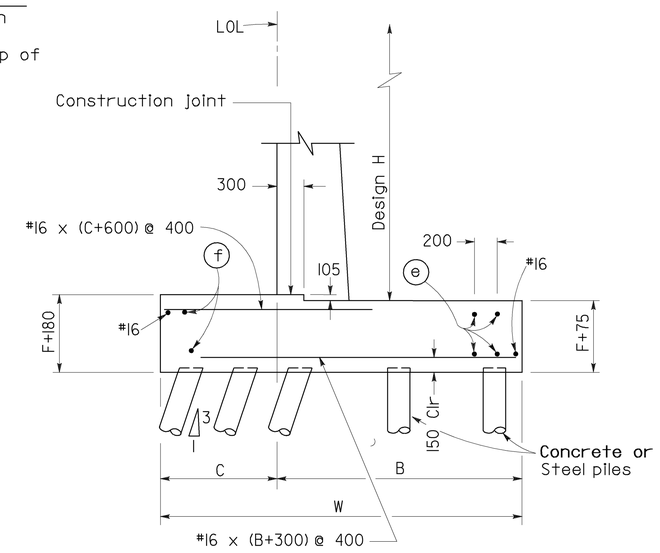

400 kN PILE FOOTING SECTION

Reinforcement detailed is to be placed in addition to that shown for spread footing. See Pile Layout on other sheets.

STATE OF CALIFORNIA
DEPARTMENT OF TRANSPORTATION

RETAINING WALL TYPE 1 H=9700 THROUGH 10 900 mm

NO SCALE

ALL DIMENSIONS ARE IN MILLIMETERS UNLESS OTHERWISE SHOWN

RSP B3-2 DATED OCTOBER 26, 2000 SUPERSEDES STANDARD PLAN B3-2 DATED JULY 1, 1999-PAGE 183 OF THE STANDARD PLANS BOOK DATED JULY 1999.

REVISED STANDARD PLAN RSP B3-2

1999 REVISED STD. PLAN RSP B3-2