DIST	COUNTY	ROUTE	KILOMETER POST TOTAL PROJECT	SHEET NO.	TOTAL SHEETS

Caltrans Metric

REGISTERED CIVIL ENGINEER

October 26, 2000
PLANS APPROVAL DATE

REGISTERED PROFESSIONAL ENGINEER Overcomer Y. Hor No. C45803 Exp. 12-31-02 CIVIL STATE OF CALIFORNIA

The State of California or its officers or agents shall not be responsible for the accuracy or completeness of electronic copies of this plan sheet.

To accompany plans dated _____

1999 REVISED STD. PLAN RSP B3-1

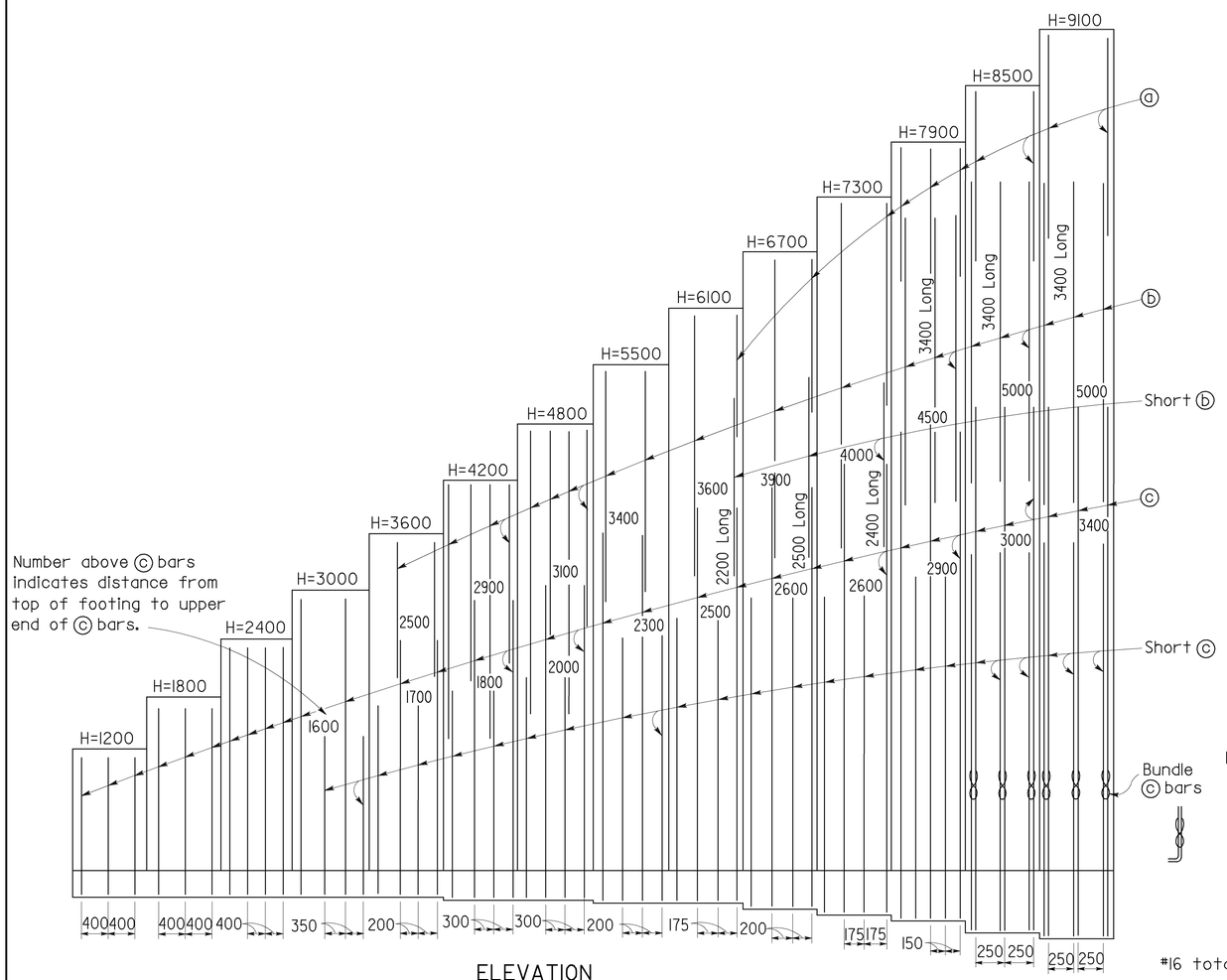

ELEVATION

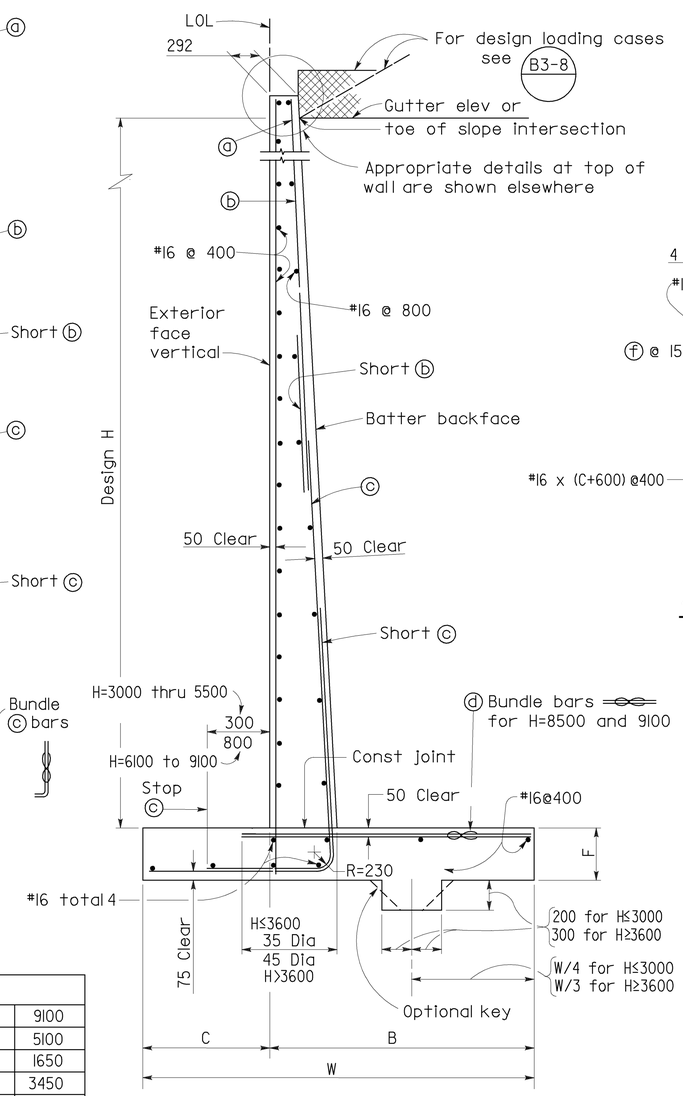

SPREAD FOOTING SECTION

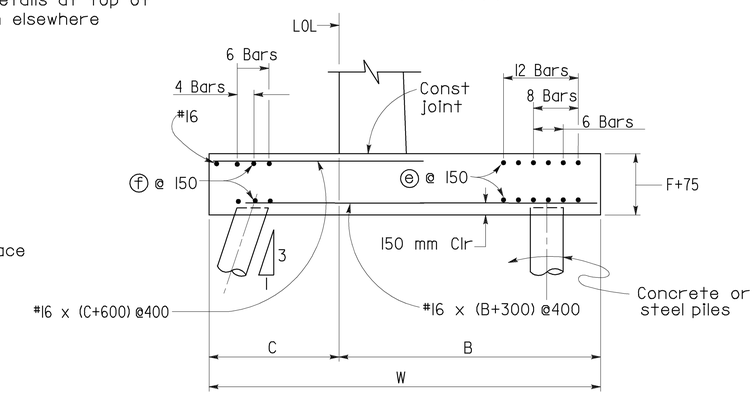

400 kN PILE FOOTING SECTION

Reinforcement detailed is to be placed in addition to that shown for spread footing. All piles not shown, see Pile Layout on other sheets.

TABLE OF REINFORCING STEEL DIMENSIONS AND DATA

Design H		1200	1800	2400	3000	3600	4200	4800	5500	6100	6700	7300	7900	8500	9100
W		1000	1300	1600	1900	2200	2450	2750	3050	3350	3700	4050	4350	4650	5100
C		300	400	500	600	700	800	900	1000	1100	1200	1350	1450	1550	1650
B		700	900	1100	1300	1500	1650	1850	2050	2250	2500	2700	2900	3100	3450
F		400	400	400	400	400	450	450	450	450	500	550	650	750	850
Batter		100:4	100:4	100:4	100:4	100:4	100:4	100:4	100:4	100:4	100:4	100:5	100:6	100:6	100:7
ⓐ bars		—	—	—	—	—	—	—	—	#16@700	#16@800	#16@700	#16@300	#16@500	#25@500
ⓑ bars		—	—	—	—	#16@400	#16@300	#16@300	#19@400	#25@350	#25@400	#25@350	#25@300	#25@250	#29@250
ⓒ bars		#16@400	#16@400	#16@400	#19@350	#19@200	#25@300	#29@300	#29@200	#29@175	#36@200	#36@175	#36@150	#36@250 ⧖	#36@250 ⧖
ⓓ bars		#16@400	#16@400	#16@400	#16@350	#16@200	#25@300	#29@300	#29@200	#29@175	#36@200	#36@175	#36@150	#36@250 ⧖	#36@250 ⧖
Total ⓔ bars		6-#19	6-#19	6-#19	12-#19	12-#19	12-#19	12-#19	8-#19	8-#19	8-#19	6-#19	6-#19	6-#19	6-#19
Total ⓕ bars		—	—	—	6-#19	6-#19	6-#19	6-#19	6-#19	6-#19	6-#19	4-#16	4-#16	4-#16	4-#16
Loading Case I	Toe Pressure kPa	80	90	105	120	135	160	170	190	205	220	235	255	275	300
Loading Case II	Toe Pressure kPa	55	70	95	110	130	160	175	200	225	265	285	310	340	360
Loading Case III	Toe Pressure kPa	65	80	100	120	140	165	180	205	230	260	280	310	345	360

⧖ Denotes a bundle of 2 bars

NOTES

1. For details not shown and drainage notes see B3-8
2. For wall stem joint details see B0-3/3-3 and B0-3/3-4
3. For pile footing for design H=1200 use same footing dimensions as for design H=1800.

STATE OF CALIFORNIA
DEPARTMENT OF TRANSPORTATION

RETAINING WALL TYPE 1 H=1200 THROUGH 9100 mm

NO SCALE

ALL DIMENSIONS ARE IN MILLIMETERS UNLESS OTHERWISE SHOWN

RSP B3-1 DATED OCTOBER 26, 2000 SUPERSEDES STANDARD PLAN B3-1 DATED JULY 1, 1999-PAGE 182 OF THE STANDARD PLANS BOOK DATED JULY 1999.

REVISED STANDARD PLAN RSP B3-1