DIST	COUNTY	ROUTE	KILOMETER POST TOTAL PROJECT	SHEET NO.	TOTAL SHEETS

Caltrans Metric

REGISTERED CIVIL ENGINEER

October 26, 2000
PLANS APPROVAL DATE

REGISTERED PROFESSIONAL ENGINEER Nahed Abdin No. C48719 Exp. 9-30-04 CIVIL STATE OF CALIFORNIA

The State of California or its officers or agents shall not be responsible for the accuracy or completeness of electronic copies of this plan sheet.

To accompany plans dated _____

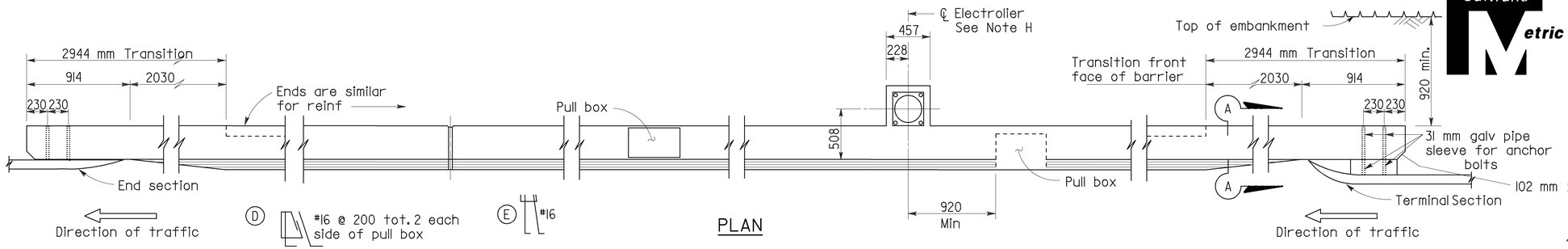

PLAN

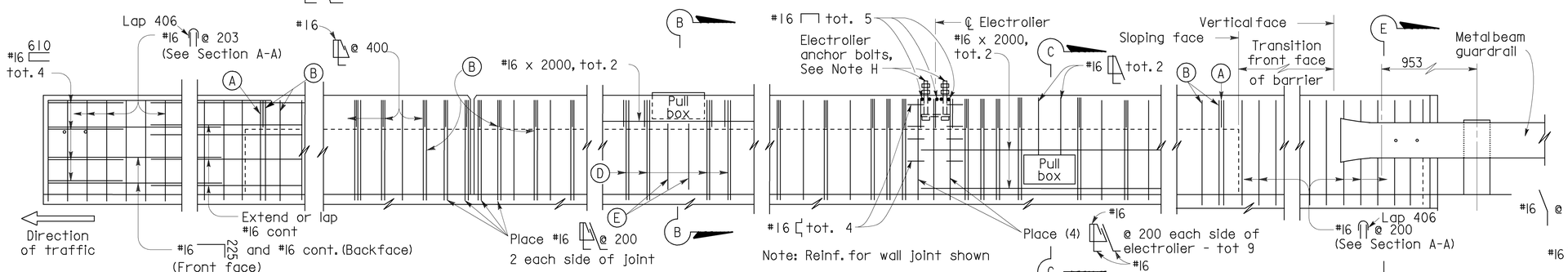

METAL BEAM GUARDRAIL CONNECTION

DECK OR WALL JOINT

ELEVATION

ELECTROLIER (See Note F)

TYPE 736A

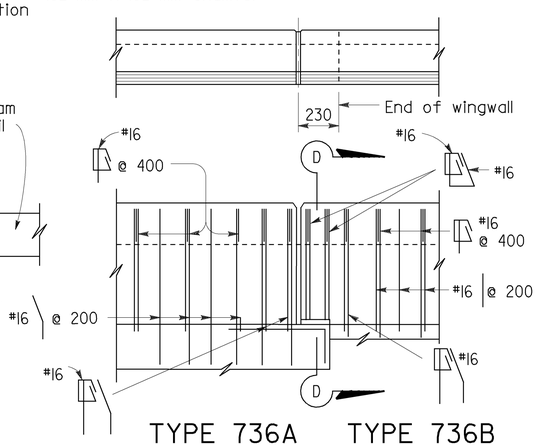

TYPE 736A TYPE 736B

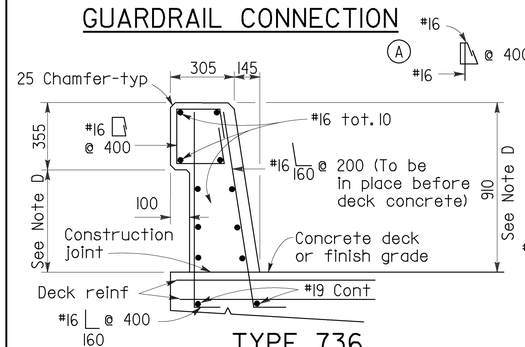

TYPE 736

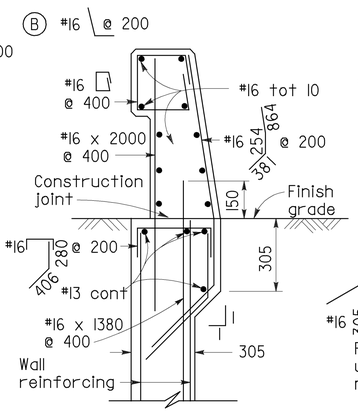

TYPE 736A

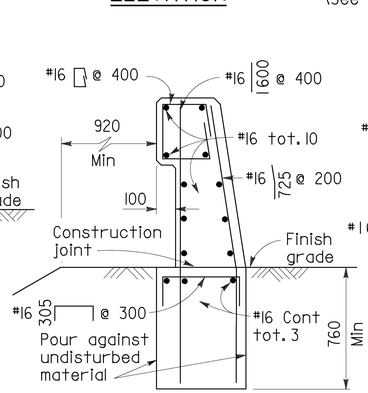

TYPE 736B

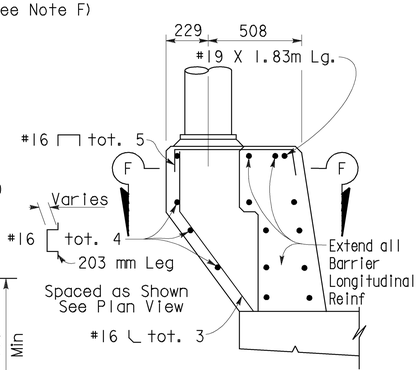

ELEVATION PEDESTAL

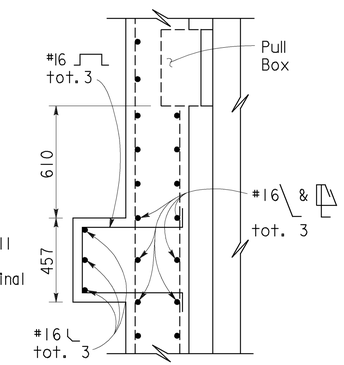

SECTION F-F

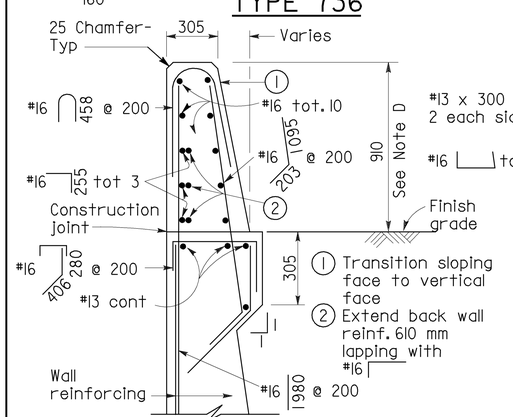

Details shown for barrier anchorage to Type 736A. Anchorgae for barrier Types 736 and 736B are similar to their respective details.

SECTION A-A

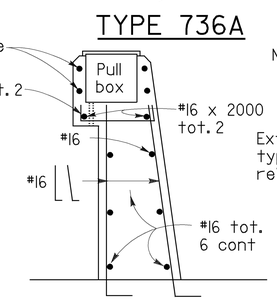

SECTION B-B

Note: Types 736A & 736B are similar to Type 736 except as noted

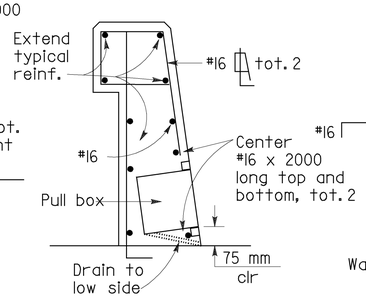

SECTION C-C

See Notes

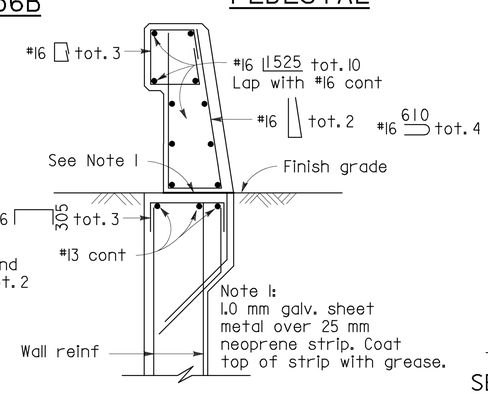

SECTION D-D

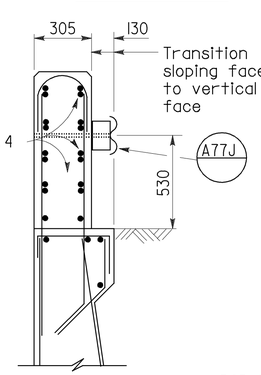

SECTION E-E

See Note E

NOTES

A. Walls are to be backfilled before barrier is placed.

B. Clearance to reinforcing steel in barrier to be 25 mm except as noted. Longitudinal reinforcement to stop at all expansion joints.

C. See Project Plans for locations of electroliers and pull boxes.

D. Dimensions may vary with roadway cross slope and with certain thickness of surfacing. See Project Plans.

E. For Metal Beam Guardrail Connection details not shown, see General Plan and Standard Plans.

F. Refer to Project Plans and Standard Plan Sheets ES-9A, ES-9C and ES-9D for electrical details concerning barriers. The maximum number of conduits in a barrier is limited to two (2) 50 mm conduits (max.) along with one (1) 75 mm conduit. When a 75 mm conduit is used, it is restricted to the base of barrier.

G. Minimum concrete edge distance to reinforcing shown, shall be maintained, edge distance may be adjusted to accomodate increase in concrete cover for architectural treatment. See Typical Section.

H. For Electrolier mounting Details, See Revised Standard Plans ES-6A and ES-6B.

STATE OF CALIFORNIA
DEPARTMENT OF TRANSPORTATION

CONCRETE BARRIER TYPE 736

NO SCALE

ALL DIMENSIONS ARE IN MILLIMETERS UNLESS OTHERWISE SHOWN

RSP B11-56 DATED OCTOBER 26, 2000 SUPERSEDES STANDARD PLAN B11-56 DATED JULY 1, 1999-PAGE 209 OF THE STANDARD PLANS BOOK DATED JULY 1999.

REVISED STANDARD PLAN RSP B11-56

1999 STD. PLAN RSP B11-56