DIST	COUNTY	ROUTE	KILOMETER POST TOTAL PROJECT	SHEET NO.	TOTAL SHEETS

REGISTERED CIVIL ENGINEER

July 1, 2004
PLANS APPROVAL DATE

REGISTERED PROFESSIONAL ENGINEER
Tiliat Sattar
No. C42892
Exp. 03-31-2006
CIVIL
STATE OF CALIFORNIA

The State of California or its officers or agents shall not be responsible for the accuracy or completeness of electronic copies of this plan sheet.

To get to the Caltrans web site, go to: http://www.dot.ca.gov

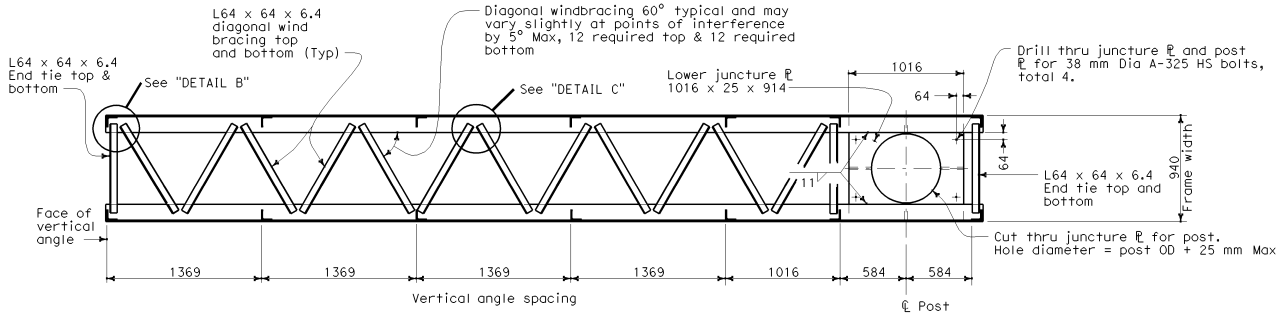

SECTION A-A
LOWER JUNCTURE CONNECTION

See Standard Plan S110

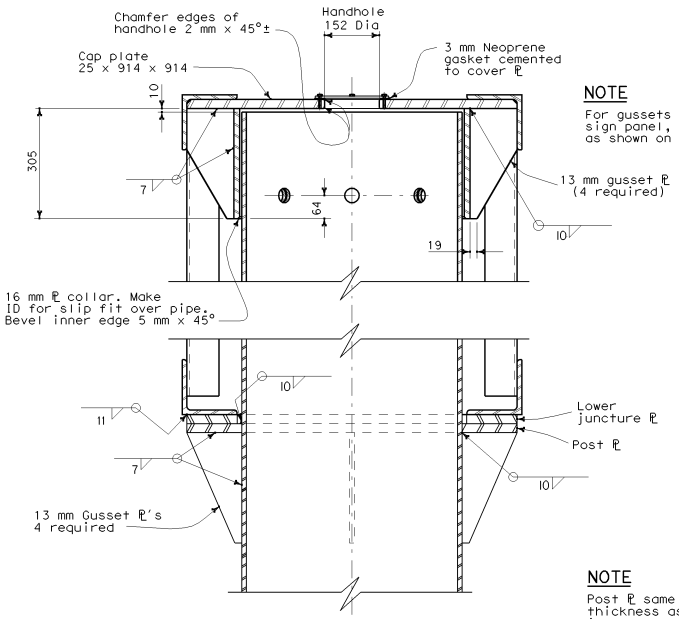

NOTE

For gussets parallel to the sign panel, cut to clear bolts as shown on Standard Plan S110.

SECTION B-B

See Standard Plan S110

NOTE

Post ℙ same size and thickness as lower juncture plate. Cut for post OD + 25 mm Max and weld to post

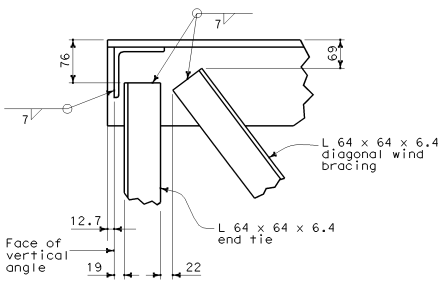

DETAIL B

NOTES

1. In all cases truss shall be supported at lower juncture connection.
2. Post to truss connections shall be fitted in shop. Faying surfaces shall meet tolerances noted in contract documents.

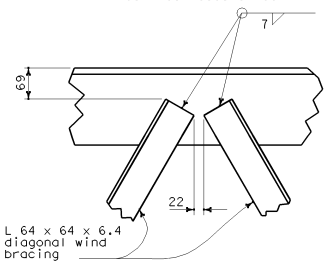

DETAIL C

STATE OF CALIFORNIA
DEPARTMENT OF TRANSPORTATION

OVERHEAD SIGN-TRUSS SINGLE POST TYPE FRAME JUNCTURE DETAILS FULL CANTILEVER CHANGEABLE MESSAGE SIGNS MODEL 500

NO SCALE

ALL DIMENSIONS ARE IN MILLIMETERS UNLESS OTHERWISE SHOWN

S112

08-02-04