DIST	COUNTY	ROUTE	KILOMETER POST TOTAL PROJECT	SHEET NO.	TOTAL SHEETS

REGISTERED CIVIL ENGINEER

July 1, 2004
PLANS APPROVAL DATE

REGISTERED PROFESSIONAL ENGINEER Tiliat Sattar No. C42892 Exp. 03-31-2006 CIVIL STATE OF CALIFORNIA

The State of California or its officers or agents shall not be responsible for the accuracy or completeness of electronic copies of this plan sheet.

To get to the Caltrans web site, go to: http://www.dot.ca.gov

Caltrans Metric

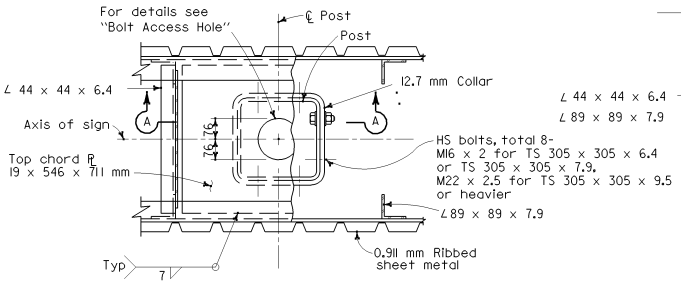

PLAN

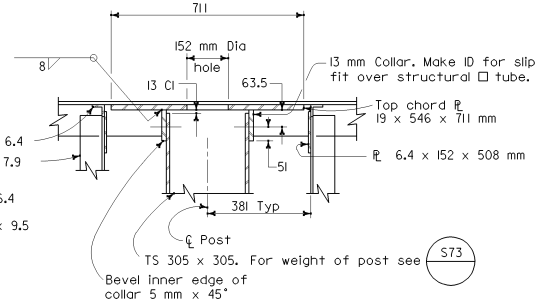

SECTION A-A

UPPER JUNCTURE CONNECTION

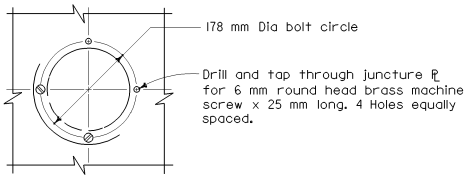

PLAN

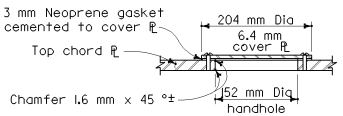

SECTION

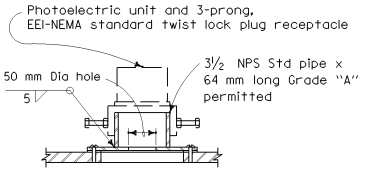

SECTION
With photoelectric unit

BOLT ACCESS HOLE

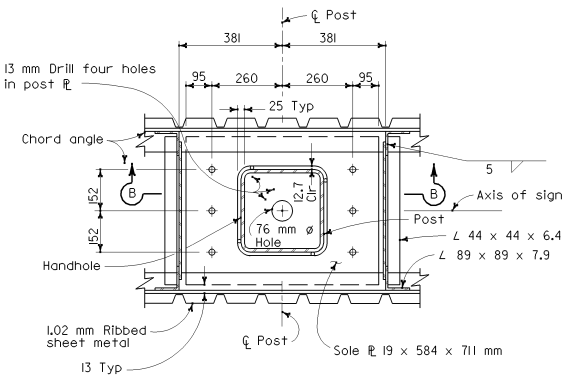

PLAN

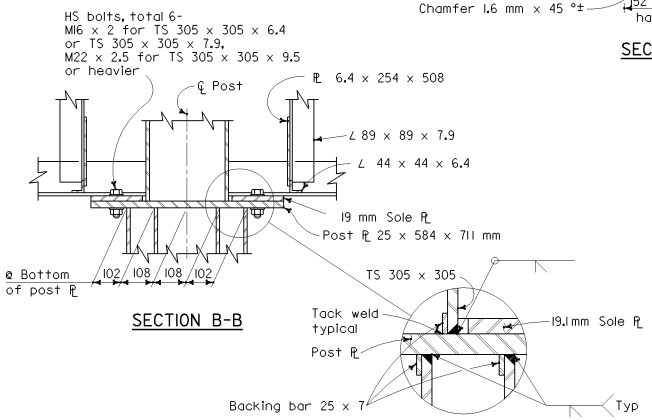

SECTION B-B

NOTE

Lower connection plates shall be machined or straightened after welding to provide full contact between faying surfaces before bolting.

LOWER JUNCTURE CONNECTION

STATE OF CALIFORNIA
DEPARTMENT OF TRANSPORTATION

OVERHEAD SIGNS-BOX BEAM CLOSED TRUSS SINGLE POST BUTTERFLY FRAME JUNCTURE DETAILS

NO SCALE

ALL DIMENSIONS ARE IN MILLIMETERS UNLESS OTHERWISE SHOWN

S72

2004 Std PLAN S72

08-05-04