DIST	COUNTY	ROUTE	KILOMETER POST TOTAL PROJECT	SHEET NO.	TOTAL SHEETS

Caltrans Metric

REGISTERED CIVIL ENGINEER

July 1, 2004
PLANS APPROVAL DATE

REGISTERED PROFESSIONAL ENGINEER Tiliat Sattar No. C42892 Exp. 03-31-2006 CIVIL STATE OF CALIFORNIA

The State of California or its officers or agents shall not be responsible for the accuracy or completeness of electronic copies of this plan sheet.

To get to the Caltrans web site, go to: http://www.dot.ca.gov

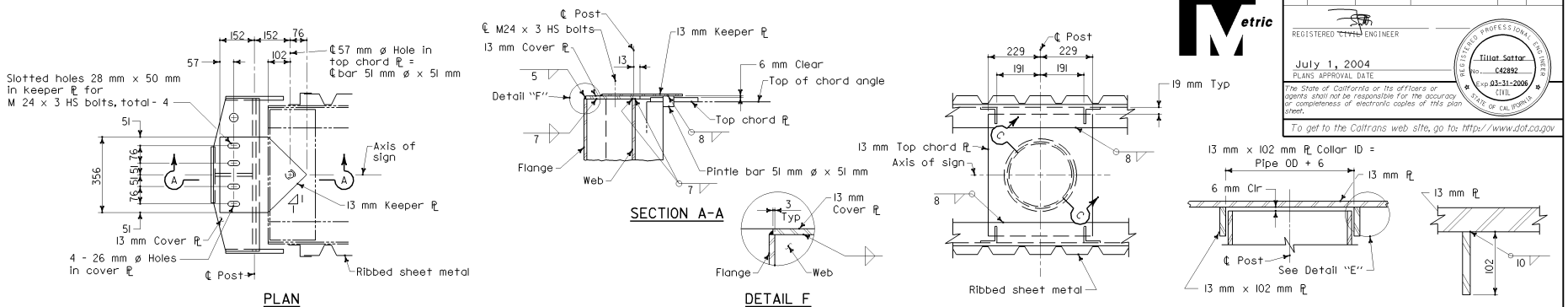

UPPER JUNCTURE CONNECTION
END POST

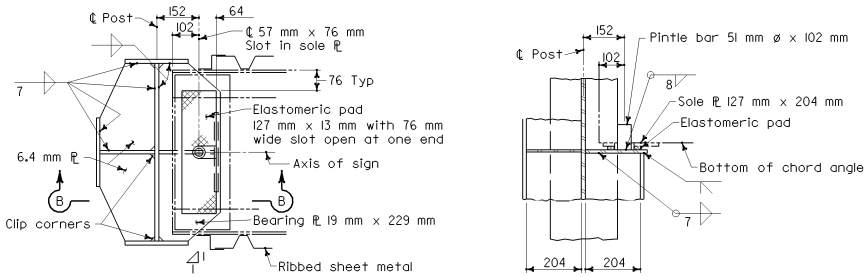

LOWER JUNCTURE CONNECTION
END POST

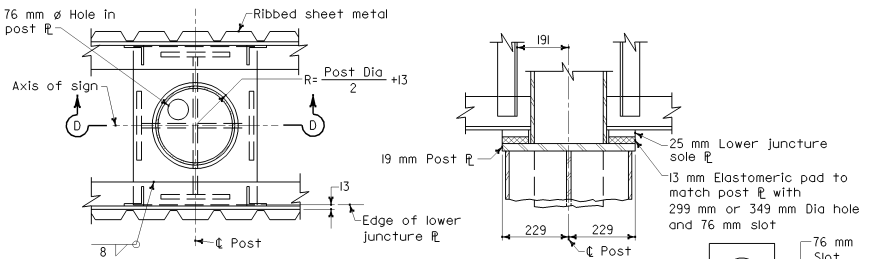

LOWER JUNCTURE CONNECTION
INSET POST

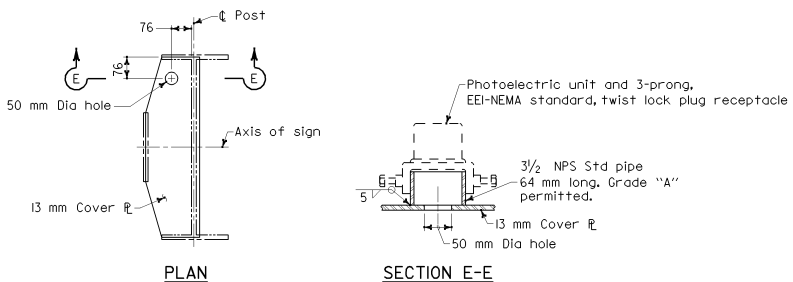

PHOTOELECTRIC CONTROL UNIT

STATE OF CALIFORNIA
DEPARTMENT OF TRANSPORTATION

OVERHEAD SIGNS-BOX BEAM CLOSED TRUSS-TWO POST TYPE FRAME JUNCTURE DETAILS

NO SCALE

ALL DIMENSIONS ARE IN MILLIMETERS UNLESS OTHERWISE SHOWN

S65

2004 Std PLAN S65

354

08-05-04