DIST	COUNTY	ROUTE	KILOMETER POST TOTAL PROJECT	SHEET NO.	TOTAL SHEETS

Caltrans Metric

LICENSED LANDSCAPE ARCHITECT

July 1, 2004
PLANS APPROVAL DATE

The State of California or its officers or agents shall not be responsible for the accuracy or completeness of electronic copies of this plan sheet.

To get to the Caltrans web site, go to: http://www.dot.ca.gov

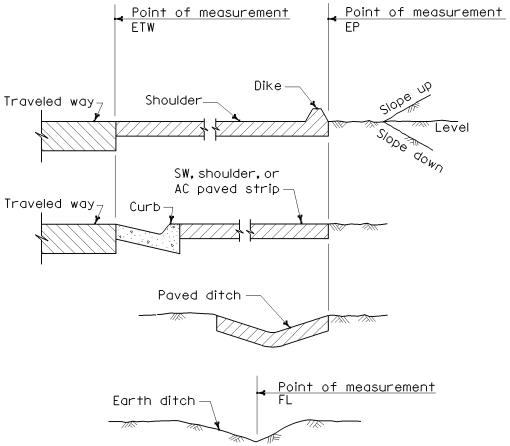

SECTION
POINTS OF MEASUREMENT

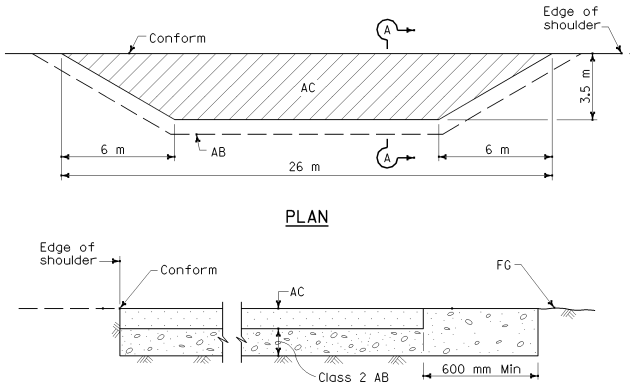

PLAN

SECTION A-A
MAINTENANCE VEHICLE PULLOUT

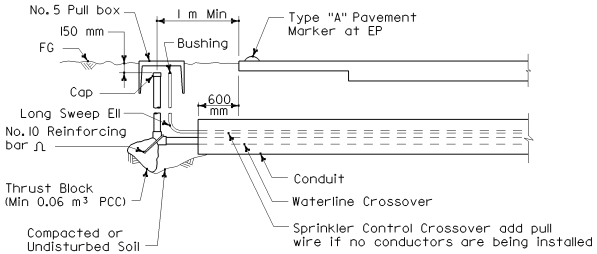

SECTION
IRRIGATION CROSSOVER

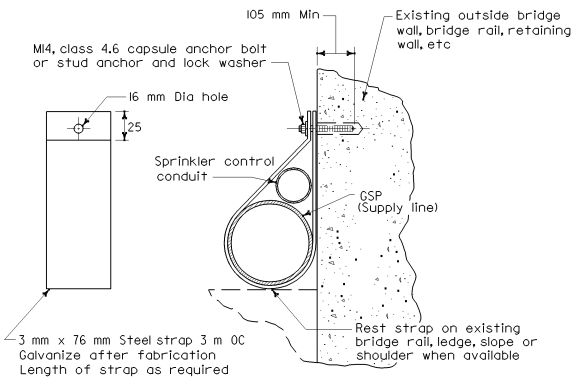

PIPE ANCHOR TYPE I

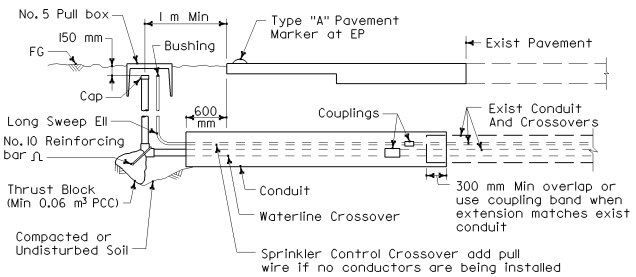

SECTION
EXTEND IRRIGATION CROSSOVER

STATE OF CALIFORNIA
DEPARTMENT OF TRANSPORTATION

PLANTING AND IRRIGATION DETAILS

NO SCALE

ALL DIMENSIONS ARE IN
MILLIMETERS UNLESS OTHERWISE SHOWN

H9

2004 Std PLAN H9

04-08-04