DIST	COUNTY	ROUTE	KILOMETER POST TOTAL PROJECT	SHEET NO.	TOTAL SHEETS

Caltrans Metric

REGISTERED CIVIL ENGINEER

July 1, 2004
PLANS APPROVAL DATE

REGISTERED PROFESSIONAL ENGINEER Tiliat Sattar No. C42892 Exp. 03-31-2006 CIVIL STATE OF CALIFORNIA

The State of California or its officers or agents shall not be responsible for the accuracy or completeness of electronic copies of this plan sheet.

To get to the Caltrans web site, go to: http://www.dot.ca.gov

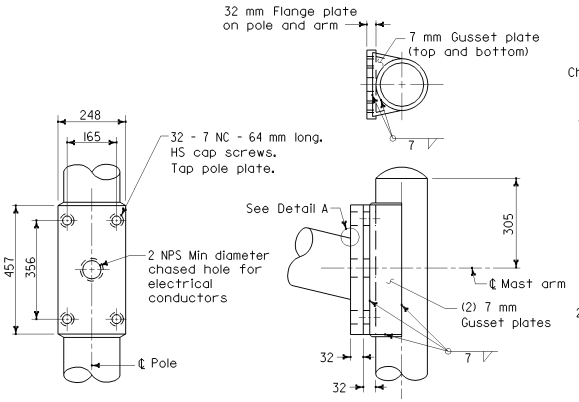

MAST ARM CONNECTION DETAILS

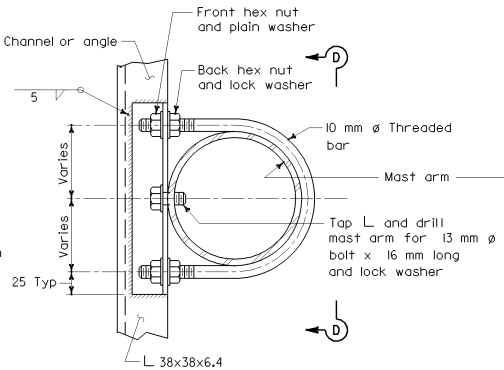

NOTE

Tighten front hex nuts first, then tighten back hex nuts.

NOTE

Lighting details not shown see Note 5 on Standard Plan ES-7K. Mounting to channel shown, mounting to angle similar.

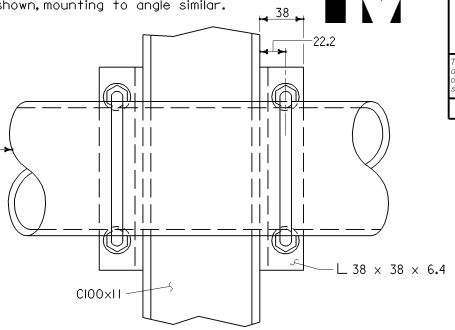

VIEW D-D

SIGN FRAME MOUNTING DETAILS

All types

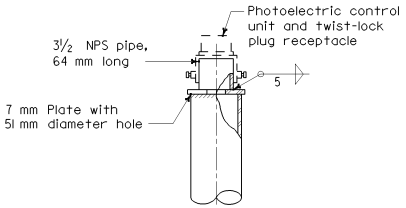

POLE TOP DETAIL

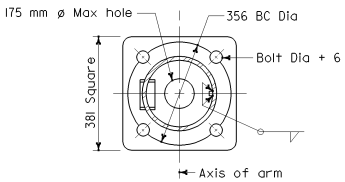

PLAN

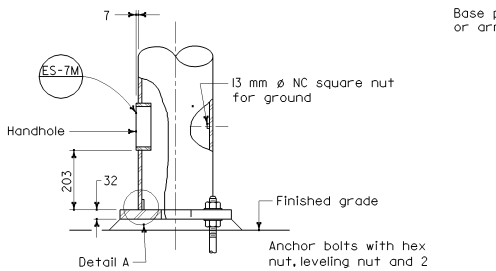

ELEVATION

BASE PLATE AND ANCHORAGE DETAILS

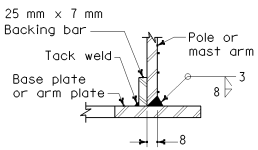

DETAIL A

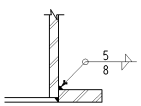

ALTERNATIVE DETAIL A

For pole-base plate only.

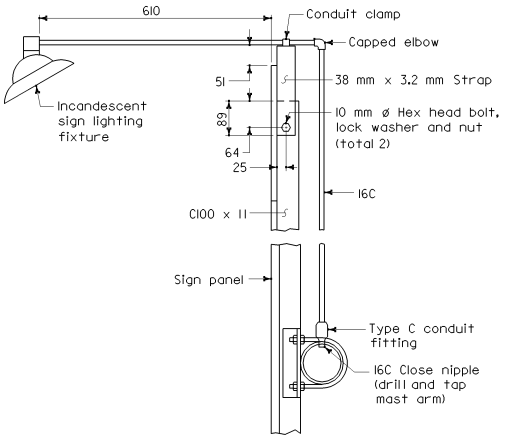

INCANDESCENT LIGHTING FIXTURE TYPES 9A AND 9B

See Note 4 on Standard Plan ES-7K.

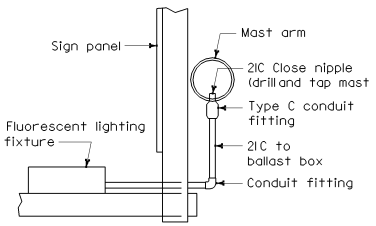

FLUORESCENT LIGHTING FIXTURE TYPE 9 FRAME

STATE OF CALIFORNIA
DEPARTMENT OF TRANSPORTATION

ELECTRICAL SYSTEMS (SIGNAL, LIGHTING AND ELECTRICAL SYSTEMS CANTILEVER FLASHING BEACON TYPES 9, 9A AND 9B)

NO SCALE

ALL DIMENSIONS ARE IN MILLIMETERS UNLESS OTHERWISE SHOWN

ES-7L