DIST	COUNTY	ROUTE	KILOMETER POST TOTAL PROJECT	SHEET NO.	TOTAL SHEETS

Caltrans Metric

REGISTERED CIVIL ENGINEER

July 1, 2004
PLANS APPROVAL DATE

REGISTERED PROFESSIONAL ENGINEER Dallas Forester No. C37765 Exp. 12-31-04 CIVIL STATE OF CALIFORNIA

The State of California or its officers or agents shall not be responsible for the accuracy or completeness of electronic copies of this plan sheet.

To get to the Caltrans web site, go to: http://www.dot.ca.gov

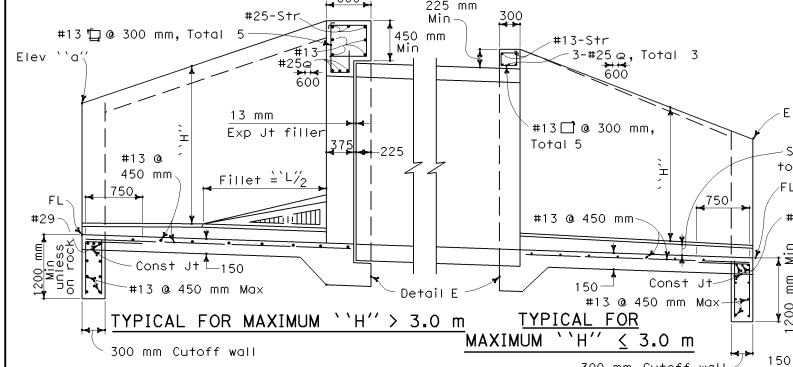

TYPICAL FOR MAXIMUM ``H'' > 3.0 m

TYPICAL FOR MAXIMUM ``H'' ≤ 3.0 m

PART LONGITUDINAL SECTION

NOTE

RCP shown. Metal pipe similar except eliminate the expansion joint and use hook bolts @ 480 mm± spacing. Size and length provided by manufacturer.

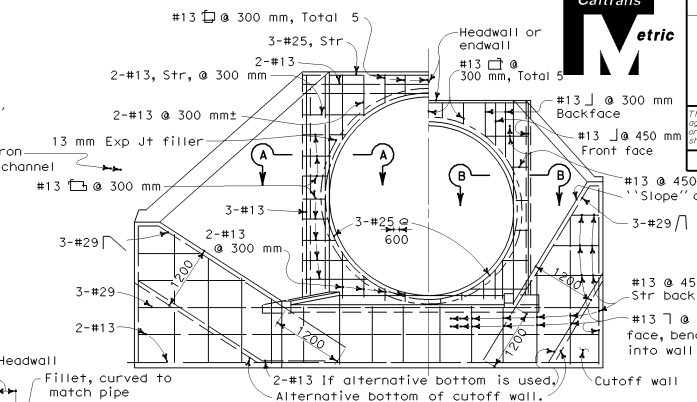

TYPICAL FOR MAXIMUM ``H'' > 3 m

TYPICAL FOR MAXIMUM ``H'' ≤ 3 m

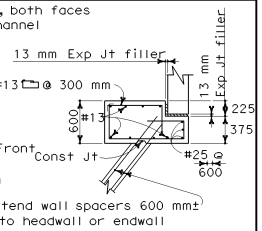

SECTION A-A

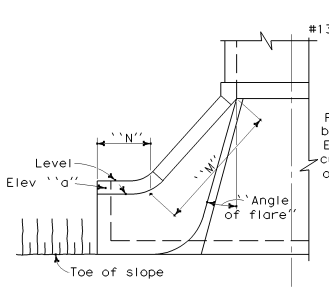

ALTERNATIVE WARPED WINGWALL

Use where additional protection to toe of embankment is required. If at upstream end, fillet is not shown.

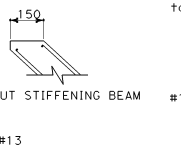

WITHOUT STIFFENING BEAM

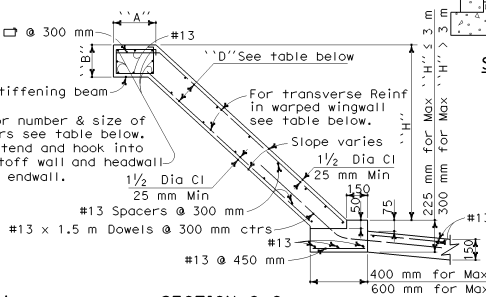

SECTION C-C

Where abrasion is anticipated, increase apron thickness to 175 mm minimum to provide 50 mm minimum reinforcement coverage.

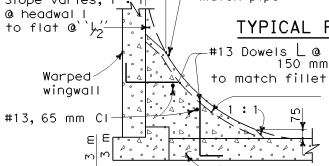

SECTION F-F

Extend wall spacers 600 mm± into headwall or endwall. Rotate if necessary.

(Near spring-line, eliminate face extension and hook rear extension outward, if possible.)

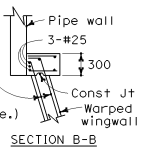

SECTION B-B

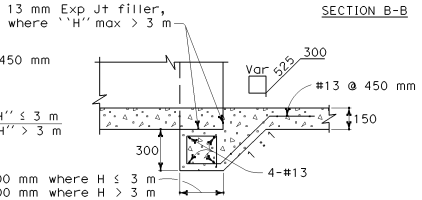

Dim is 300 mm where H ≤ 3 m
Dim is 600 mm where H > 3 m

DETAIL E

END ELEVATION

If at upstream end, fillet is not shown

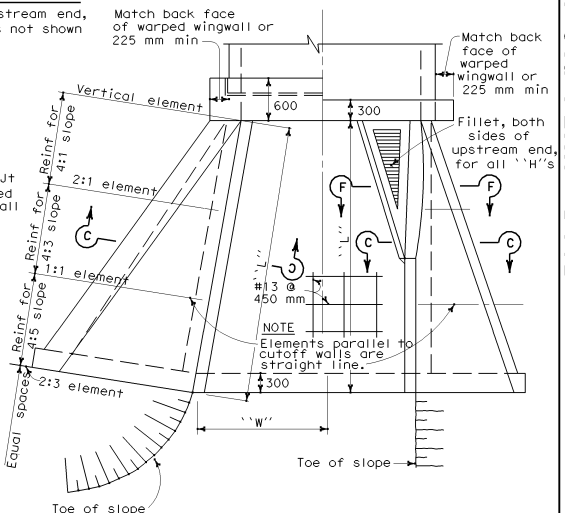

STATE OF CALIFORNIA
DEPARTMENT OF TRANSPORTATION

PIPE CULVERT HEADWALLS, ENDWALLS AND WARPED WINGWALLS

NO SCALE

ALL DIMENSIONS ARE IN MILLIMETERS UNLESS OTHERWISE SHOWN

D86B

WARPED WINGWALLS

WALL DIMENSIONS AND REINFORCING

Element Slope	``H''	2.4 m or less	3.0 m	3.7 m	4.3 m	4.9 m	5.5 m	6.1 m
4:1	Front face Reinf	#13@300	#13@175	#16@175	#16@125	#19@150	#22@175	#22@150
	Rear face Reinf	#13@300	#13@300	#13@300	#13@300	#13@300	#13@300	#13@300
4:3	Front face Reinf	#13@300	#13@300	#13@300	#13@300	#13@250	#13@200	#13@150
	Rear face Reinf	#13@300	#13@300	#13@300	#13@250	#13@175	#13@150	#16@200
4:5	Front face Reinf	#13@300	#13@300	#13@300	#13@300	#13@300	#13@300	#13@300
	Rear face Reinf	#13@200	#13@200	#13@125	#16@150	#19@175	#19@150	#22@150
``D'' at Cutoff Wall (mm)		150	150	150	190	200	240	280
``D'' at Culvert (mm)		150	150	150	200	240	280	330

STIFFENING BEAM DIMENSIONS AND REINFORCING

``H'' Max \ ``L''	3.7 m	4.3 m	4.9 m	5.5 m	6.1 m	7.6 m	9.1 m	10.7 m	12.2 m or more
1.8 m	No beam. Place 2-#19 in each face along top of wall.								
2.4 m				``A''= 300					
3.0 m									
3.7 m				``B''= 225		``A''= 450			
4.3 m			Total 6-#19		``B''= 300			``A''= 560	
4.9 m							``B''= 300		``A''= 600
5.5 m				Total 6-#22		Total 6-#25		``B''= 450	
6.1 m							Total 8-#29		

NOTES Walls designed for 600 mm surcharge; earth density = 1900 kg/m³; equivalent fluid pressure = 5.66 kPa/m.
Vary ``D'' of warped wall uniformly from that at cutoff wall to that at headwall or endwall, for maximum ``H'' > 3.7m.
Dimensions ``L'', ``W'', ``H'', ``M'', ``N'', Elevation ``a'', `` Angle of flare'', and end ``Slope'' (as apply) are shown on the plans.

2004 Std PLAN D86B

04-01-04