DIST	COUNTY	ROUTE	KILOMETER POST TOTAL PROJECT	SHEET NO.	TOTAL SHEETS

Caltrans Metric

REGISTERED CIVIL ENGINEER

July 1, 2004
PLANS APPROVAL DATE

REGISTERED PROFESSIONAL ENGINEER Douglas J. Dunnuck No. C47240 Exp. 12-31-05 CIVIL STATE OF CALIFORNIA

The State of California or its officers or agents shall not be responsible for the accuracy or completeness of electronic copies of this plan sheet.

To get to the Caltrans web site, go to: http://www.dot.ca.gov

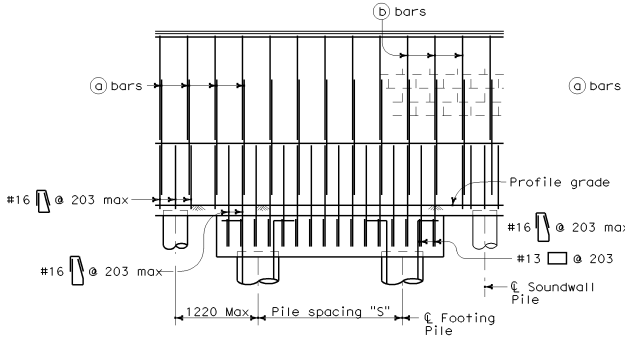

CASE 1

For details not shown, see Case 2.

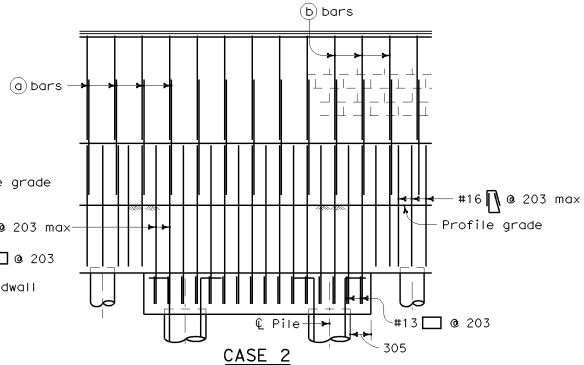

CASE 2

For details not shown, see Case 1.

PART ELEVATIONS

DESIGN NOTES

DESIGN

Uniform Building Code, 1997 Edition
and the Bridge Design Specifications.

DESIGN WIND LOAD

1293 Pa for all heights (H)

DESIGN SEISMIC LOAD

0.57 Dead load

REINFORCED CONCRETE

f'c = 22.408 MPa
fy = 413.688 MPa

CONCRETE MASONRY

REGULAR STRENGTH	HIGH STRENGTH	
f'm = 10.34 MPa	f'm = 13.79 MPa	f'm = 17.24 MPa
fb = 3.41 MPa	fb = 4.55 MPa	fb = 5.72 MPa
fs = 165.5 MPa	fs = 165.5 MPa	fs = 165.5 MPa
n = 25.8	n = 19.3	n = 15.5

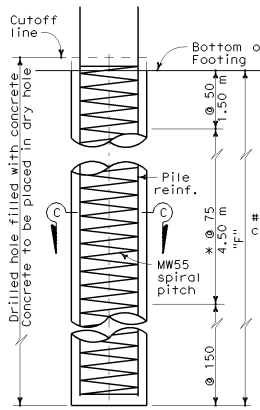

ELEVATION

* @ 50 at option of contractor.

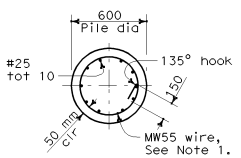

SECTION C-C

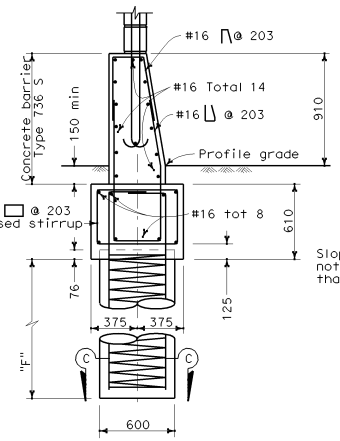

CASE 1

Level ground ±10% on both sides of barrier.
For details not shown, see Case 2.

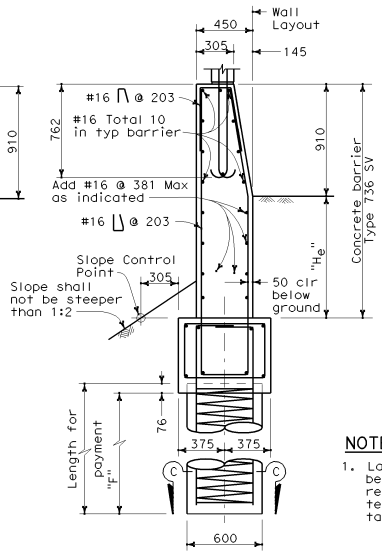

CASE 2

Level ground ±10% at the traffic side of barrier
and sloping ground on the opposite side.
For details now shown, see Case 1.

BARRIER SECTIONS

CASE 1 : PILE DATA

H	Ø = 25 min Maximum S	F	Ø = 30 min Maximum S	F	Ø = 35 min Maximum S	F	H
1930	5000	2300	5000	2000	5000	1600	1930
2540	5000	2600	5000	2200	5000	1900	2540
3150	5000	2900	5000	2500	5000	2100	3150
3759	5000	3200	5000	2700	5000	2300	3759
4369	5000	3500	5000	2900	5000	2500	4369
4978	5000	3700	5000	3200	5000	2700	4978

CASE 2 : PILE DATA

	H	Ø = 30 min Maximum S	F	Ø = 35 min Maximum S	F	H
H_e = 300	1930	5000	4600	5000	3600	1930
	2540	5000	5000	5000	4000	2540
	3150	5000	5400	5000	4300	3150
	3759	5000	5800	5000	4600	3759
	4369	5000	6200	5000	4900	4369
	4978	5000	6500	5000	5200	4978
H_e = 600	1930	5000	5300	5000	4100	1930
	2540	5000	5600	5000	4400	2540
	3150	5000	6000	5000	4700	3150
	3759	5000	6300	5000	5000	3759
	4369	5000	6700	5000	5300	4369
	4978	4800	6800	5000	5600	4978
H_e = 900	1930	5000	6000	5000	4600	1930
	2540	5000	6300	5000	4900	2540
	3150	5000	6600	5000	5200	3150
	3759	4500	6700	5000	5400	3759
	4369	4100	6700	4900	5700	4369
	4978	3800	6800	4500	5700	4978
H_e = 1200	1930	4200	6300	5000	5200	1930
	2540	3900	6400	5000	5400	2540
	3150	3700	6500	4600	5500	3150
	3759	3400	6500	4200	5500	3759
	4369	3200	6600	3900	5600	4369
	4978	3000	6700	3600	5600	4978

NOTES

1. Lapped splices in Spiral reinforcement shall be lapped at least 80 wire diameters. Spiral reinforcement at splices and at ends shall be terminated with a 135° hook with a 150 mm tail hooked around a logitudinal bar.

STATE OF CALIFORNIA
DEPARTMENT OF TRANSPORTATION

SOUNDWALL MASONRY BLOCK ON TYPE 736S/SV BARRIER ON PILE FOOTING FOR SPANNING UTILITIES

NO SCALE

ALL DIMENSIONS ARE IN MILLIMETERS UNLESS OTHERWISE SHOWN

B15-15

2004 Std PLAN B15-15

305

06-18-04