DIST	COUNTY	ROUTE	KILOMETER POST TOTAL PROJECT	SHEET NO.	TOTAL SHEETS

Caltrans Metric

REGISTERED CIVIL ENGINEER

July 1, 2004
PLANS APPROVAL DATE

REGISTERED PROFESSIONAL ENGINEER NAHED ABDIN No. C48719 Exp. 9-30-04 CIVIL STATE OF CALIFORNIA

The State of California or its officers or agents shall not be responsible for the accuracy or completeness of electronic copies of this plan sheet.

To get to the Caltrans web site, go to: http://www.dot.ca.gov

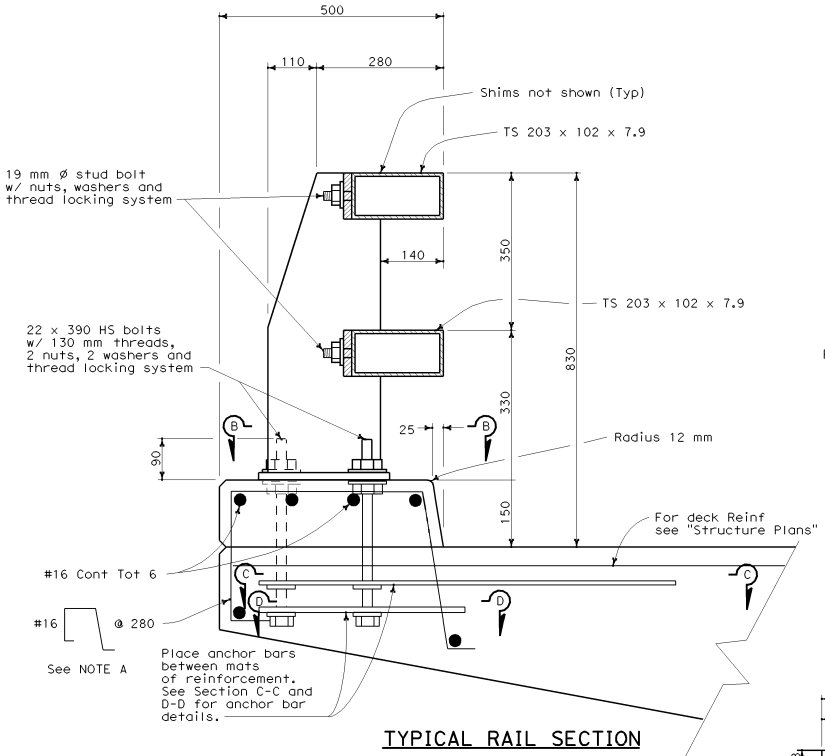

TYPICAL RAIL SECTION

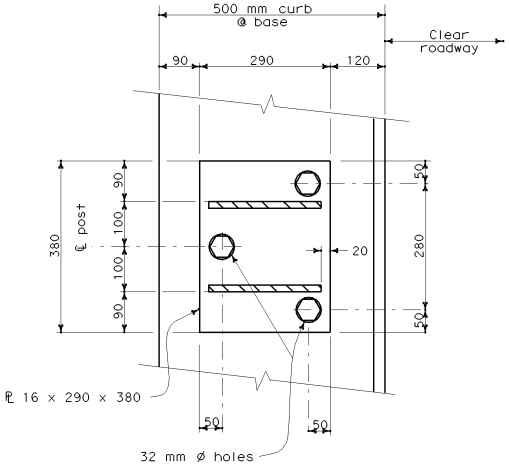

SECTION B-B

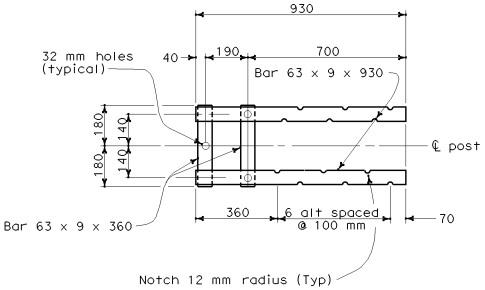

SECTION C-C
Top Anchorage

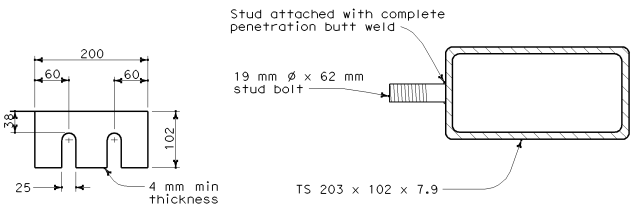

SECTION AT POST

SHIMS REQUIRED FOR TOP AND BOTTOM RAIL

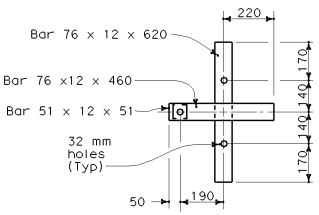

SECTION D-D
Lower Anchorage

STUD BOLT DETAIL

NOTE A

Adjust spacing to clear scupper opening by 50 mm if applicable.

STATE OF CALIFORNIA
DEPARTMENT OF TRANSPORTATION

CALIFORNIA ST-10 BRIDGE RAIL (SHEET 1 OF 3)

NO SCALE

ALL DIMENSIONS ARE IN MILLIMETERS UNLESS OTHERWISE SHOWN

B11-68

2004 Std PLAN B11-68

07-08-04