DIST	COUNTY	ROUTE	KILOMETER POST TOTAL PROJECT	SHEET NO.	TOTAL SHEETS

Caltrans Metric

REGISTERED CIVIL ENGINEER

July 1, 2004
PLANS APPROVAL DATE

REGISTERED PROFESSIONAL ENGINEER Madhwesh Raghavendracharya No. C51119 Exp. 9-30-05 CIVIL STATE OF CALIFORNIA

The State of California or its officers or agents shall not be responsible for the accuracy or completeness of electronic copies of this plan sheet.

To get to the Caltrans web site, go to: http://www.dot.ca.gov

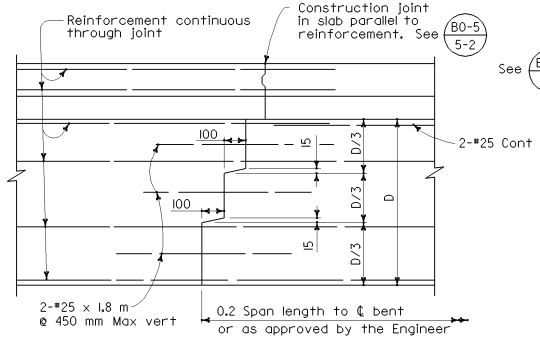

TRANSVERSE GIRDER CONSTRUCTION JOINTS

DETAIL J-3

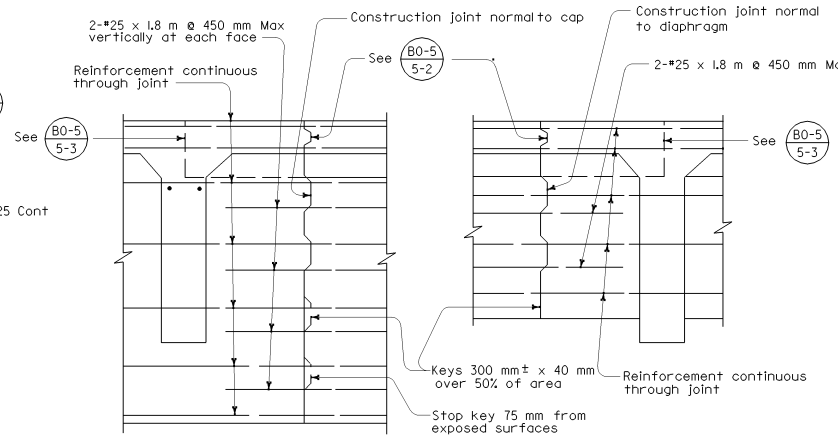

LONGITUDINAL CONSTRUCTION JOINTS

DETAIL J-4

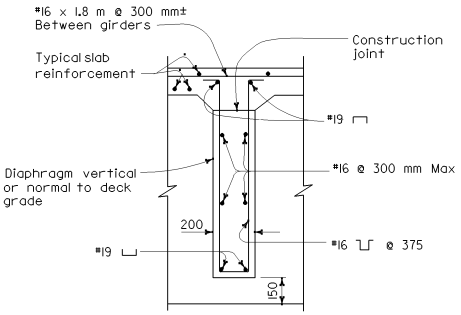

INTERMEDIATE DIAPHRAGM SECTION

DETAIL D-1

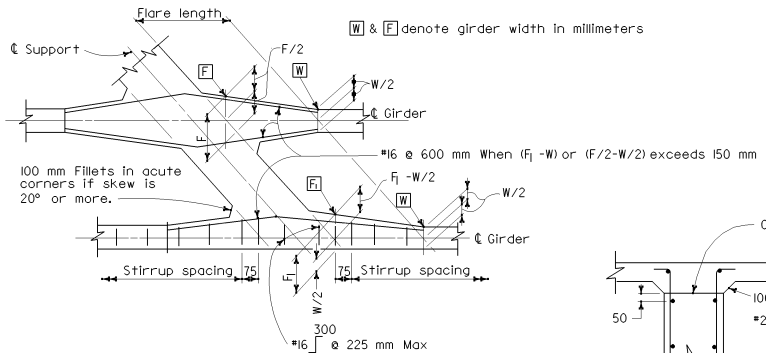

TYPICAL GIRDER FLARE AND STIRRUP SPACING DIAGRAM

DETAIL S-3

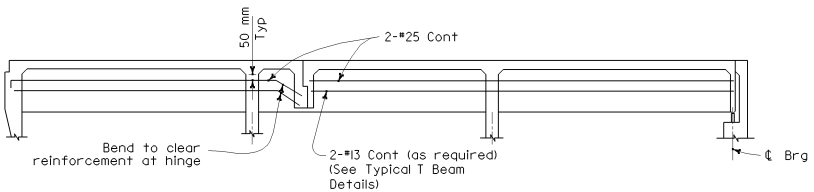

GIRDER WEB REINFORCEMENT

DETAIL J-1

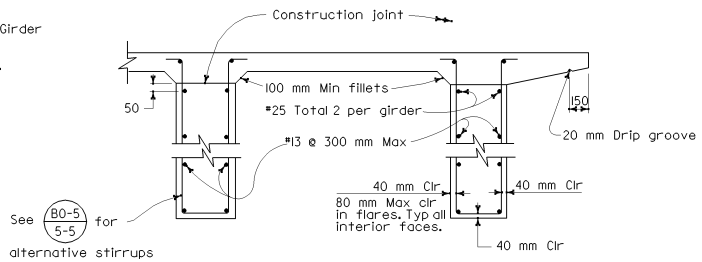

TYPICAL T BEAM DETAILS

DETAIL T-1

STATE OF CALIFORNIA
DEPARTMENT OF TRANSPORTATION

T-BEAM DETAILS

NO SCALE

ALL DIMENSIONS ARE IN MILLIMETERS UNLESS OTHERWISE SHOWN

B6-1

06-08-04