DIST	COUNTY	ROUTE	KILOMETER POST TOTAL PROJECT	SHEET NO.	TOTAL SHEETS

Caltrans Metric

Daniel T. Adams
REGISTERED CIVIL ENGINEER

July 1, 2004
PLANS APPROVAL DATE

REGISTERED PROFESSIONAL ENGINEER Daniel T. Adams No. 46476 Exp. 06-30-07 CIVIL STATE OF CALIFORNIA

The State of California or its officers or agents shall not be responsible for the accuracy or completeness of electronic copies of this plan sheet.

To get to the Caltrans web site, go to: http://www.dot.ca.gov

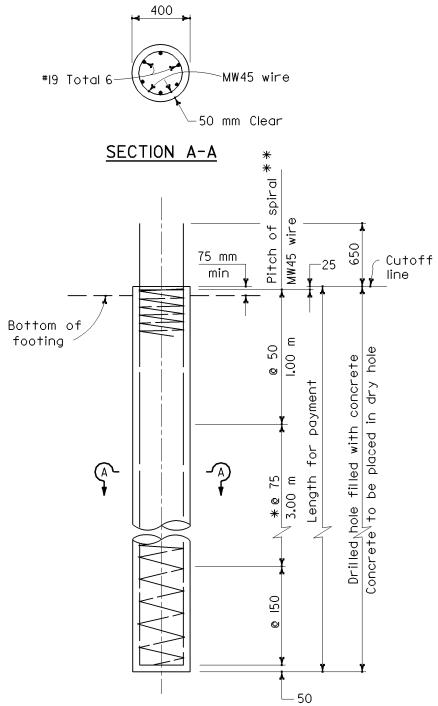

ELEVATION
400 AND 625 KILONEWTON DESIGN CAPACITY

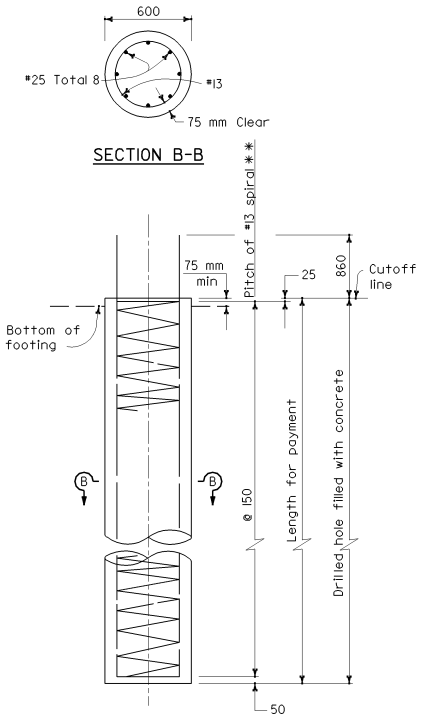

ELEVATION
900 KILONEWTON DESIGN CAPACITY

* @ 50 at option of contractor

** Extend at 50 mm pitch to top of anchor piles and load test piles. For longitudinal reinforcement for anchor piles and load test piles, see "Load Test Pile Details (2)", Standard Plan B2-10.

NOTES

Reinforcement extending into footing shall be hooked as required to provide clearance to top of footing.

Lapped splices in spiral pile reinforcement shall be lapped at least 80 wire/bar diameters. Spiral pile reinforcement at splices and at ends shall be terminated with a 135° hook with a 150 mm tail hooked around a longitudinal bar.

Piles shall be extended only in accordance with details shown in the Project Plans.

DESIGN NOTES

REINFORCED CONCRETE

f_y = 420 MPa

f'_c = 28 MPa

DESIGN CAPACITY

400 & 625 KILONEWTON PILE

COMPRESSION:

625 kN (Service state)
1250 kN (Nominal axial strength)

TENSION:

250 kN (Service state)
625 kN (Nominal axial strength)

900 KILONEWTON PILE

COMPRESSION:

900 kN (Service state)
1800 kN (Nominal axial strength)

TENSION:

360 kN (Service state)
900 kN (Nominal axial strength)

STATE OF CALIFORNIA
DEPARTMENT OF TRANSPORTATION

400 mm AND 600 mm CAST-IN-DRILLED-HOLE CONCRETE PILE

NO SCALE

ALL DIMENSIONS ARE IN MILLIMETERS UNLESS OTHERWISE SHOWN

B2-3

06-17-04