DIST	COUNTY	ROUTE	KILOMETER POST TOTAL PROJECT	SHEET NO.	TOTAL SHEETS

Caltrans Metric

REGISTERED CIVIL ENGINEER

July 1, 2004
PLANS APPROVAL DATE

REGISTERED PROFESSIONAL ENGINEER Ellis K. Hirst No. C17926 Exp. 6-30-05 CIVIL STATE OF CALIFORNIA

The State of California or its officers or agents shall not be responsible for the accuracy or completeness of electronic copies of this plan sheet.

To get to the Caltrans web site, go to: http://www.dot.ca.gov

NOTES

1. For additional details of Crash Cushion (Type REACT 9CBB), see Standard Plan A82C1.
2. For additional details of the concrete backup block, see Standard Plan A82C2.
3. Transitions for other types of concrete barrier similar to that shown for Type 60.

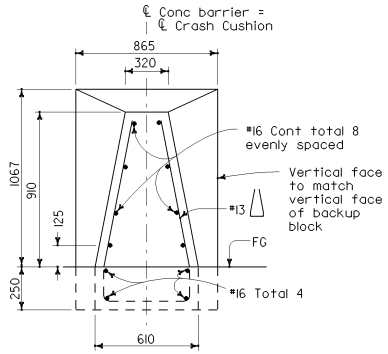

SECTION A-A
See Note 3

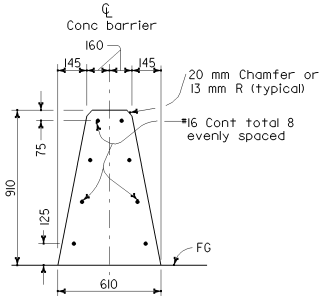

SECTION B-B
(Type 60 Barrier shown)

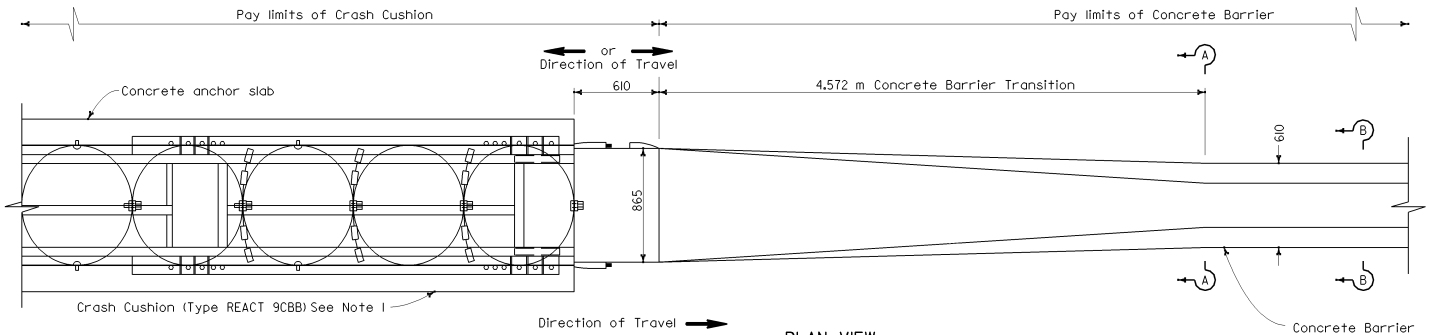

PLAN VIEW

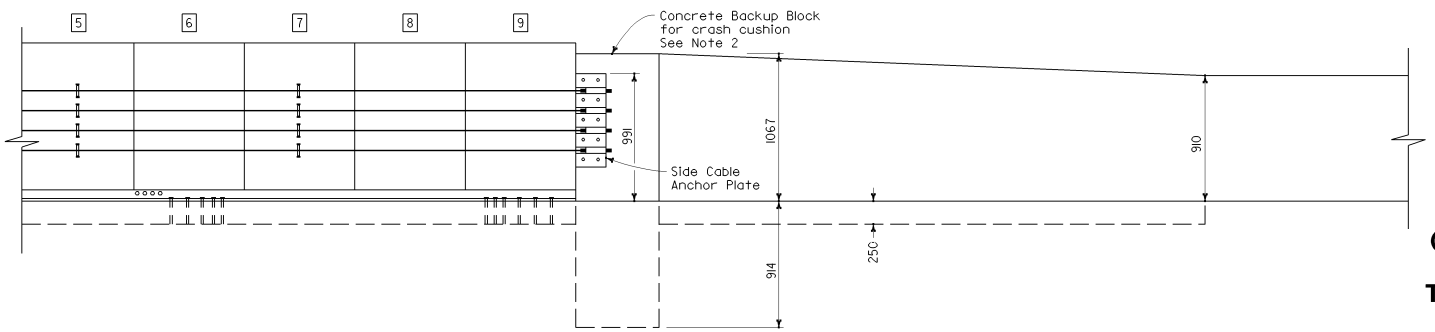

ELEVATION

STATE OF CALIFORNIA
DEPARTMENT OF TRANSPORTATION

CRASH CUSHION (TYPE REACT 9CBB) CONCRETE BARRIER TRANSITION DETAILS

NO SCALE

ALL DIMENSIONS ARE IN MILLIMETERS UNLESS OTHERWISE SHOWN

A82C3

2004 Std PLAN 182C3

04-21-04