DIST	COUNTY	ROUTE	KILOMETER POST TOTAL PROJECT	SHEET NO.	TOTAL SHEETS

Caltrans Metric

REGISTERED CIVIL ENGINEER

July 1, 2004
PLANS APPROVAL DATE

REGISTERED PROFESSIONAL ENGINEER Ellis K. Hirst No. C17926 Exp. 6-30-05 CIVIL STATE OF CALIFORNIA

The State of California or its officers or agents shall not be responsible for the accuracy or completeness of electronic copies of this plan sheet.

To get to the Caltrans web site, go to: http://www.dot.ca.gov

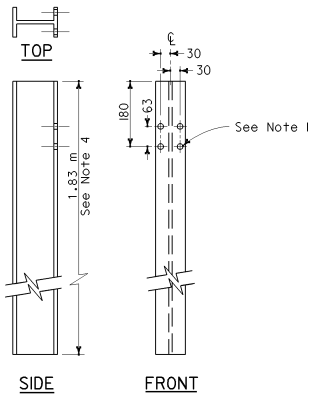

MW 150 x 14
STEEL POST

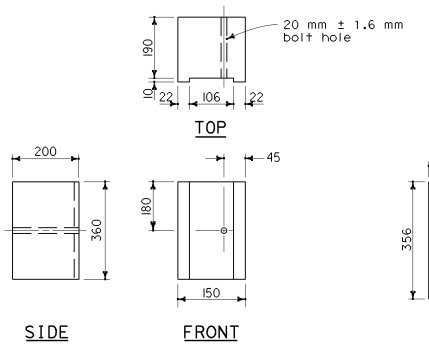

150 mm x 200 mm
NOTCHED WOOD BLOCK
See Notes 2 and 3

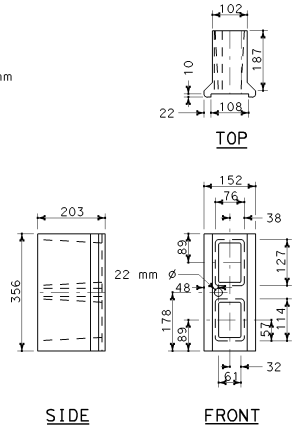

NOTCHED PLASTIC BLOCK
Option 'A'

NOTES

1. All holes in steel post shall be 21 mm dia maximum.
2. Dimensions shown for wood block are nominal.
3. Notched face of block faces steel post.
4. 2.13-meter length posts to be used for narrow roadway installation. See Standard Plan A77FA.

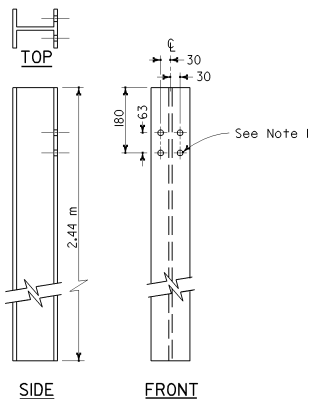

MW 150 x 22
STEEL POST

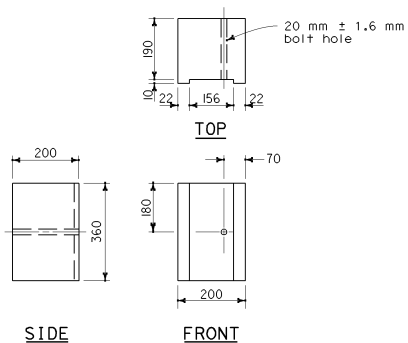

200 mm x 200 mm
NOTCHED WOOD BLOCK
See Notes 2 and 3

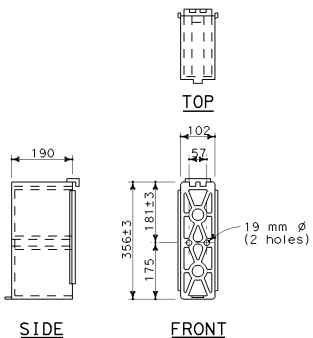

NOTCHED PLASTIC BLOCK
Option 'B'

STATE OF CALIFORNIA
DEPARTMENT OF TRANSPORTATION

METAL BEAM GUARD RAILING STEEL POST, NOTCHED WOOD BLOCK AND NOTCHED PLASTIC BLOCK DETAILS

NO SCALE

ALL DIMENSIONS ARE IN MILLIMETERS UNLESS OTHERWISE SHOWN

A77C2

2004 Std PLAN A77C2

04-30-04