DIST	COUNTY	ROUTE	KILOMETER POST TOTAL PROJECT	SHEET NO.	TOTAL SHEETS

Caltrans Metric

REGISTERED CIVIL ENGINEER

July 1, 2004
PLANS APPROVAL DATE

REGISTERED PROFESSIONAL ENGINEER
Overcomer Y. Hor
No. 45803
Exp. 12-31-06
CIVIL
STATE OF CALIFORNIA

The State of California or its officers or agents shall not be responsible for the accuracy or completeness of electronic copies of this plan sheet.

To get to the Caltrans web site, go to: http://www.dot.ca.gov

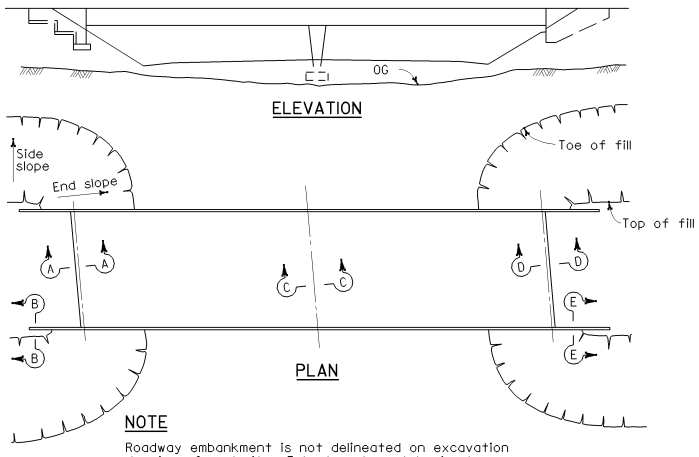

NOTE

Roadway embankment is not delineated on excavation drawings for clarity. Embankment must be in place before structure excavation is made.

IN FILL

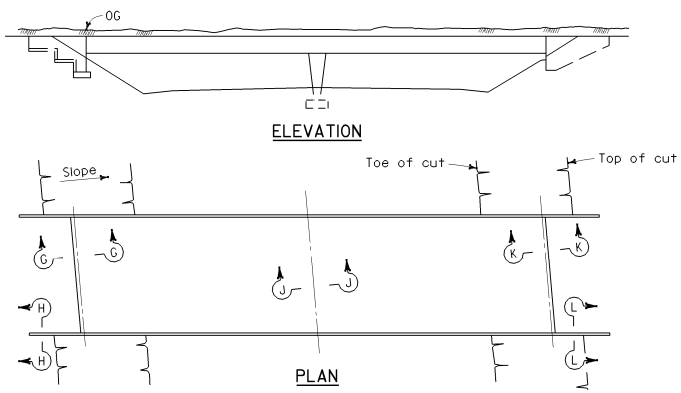

NOTE

If no roadway excavation is involved at bridge, structure excavation is measured from original ground.

IN CUT

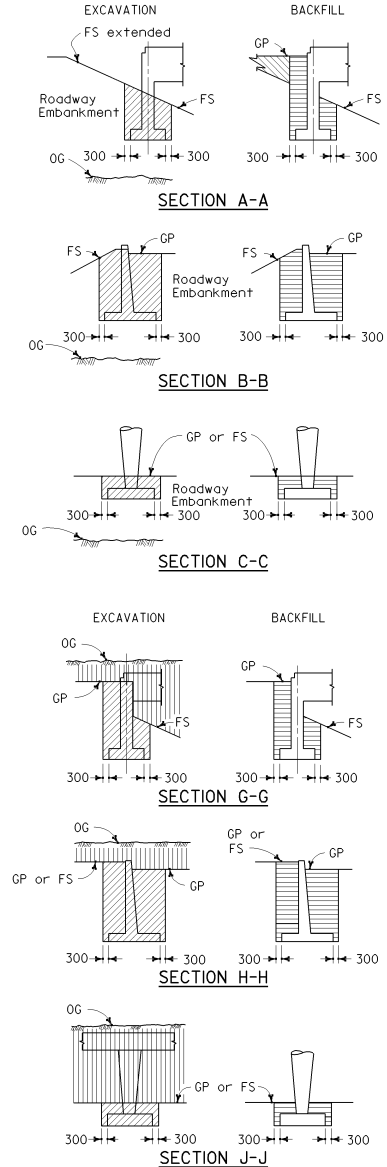

ABBREVIATIONS

OG	Original Ground
FS	Planned Finished Surface
GP	Planned Grading Plane

LEGEND

- Structure Excavation
- Structure Backfill
- Roadway Excavation
- Roadway Embankment

STATE OF CALIFORNIA
DEPARTMENT OF TRANSPORTATION

LIMITS OF PAYMENT FOR EXCAVATION AND BACKFILL BRIDGE

NO SCALE

ALL DIMENSIONS ARE IN MILLIMETERS UNLESS OTHERWISE SHOWN

A62C

03-26-04