DIST	COUNTY	ROUTE	KILOMETER POST TOTAL PROJECT	SHEET NO.	TOTAL SHEETS

REGISTERED CIVIL ENGINEER

July 1, 2002
PLANS APPROVAL DATE

REGISTERED PROFESSIONAL ENGINEER Jeffrey B. Woody No. C41260 Exp. 3-31-03 CIVIL STATE OF CALIFORNIA

The State of California or its officers or agents shall not be responsible for the accuracy or completeness of electronic copies of this plan sheet.

Caltrans now has a web site! To get to the web site, go to: http://www.dot.ca.gov

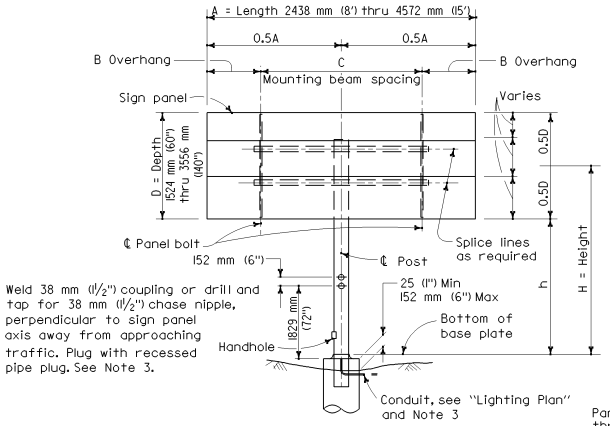

ELEVATION A

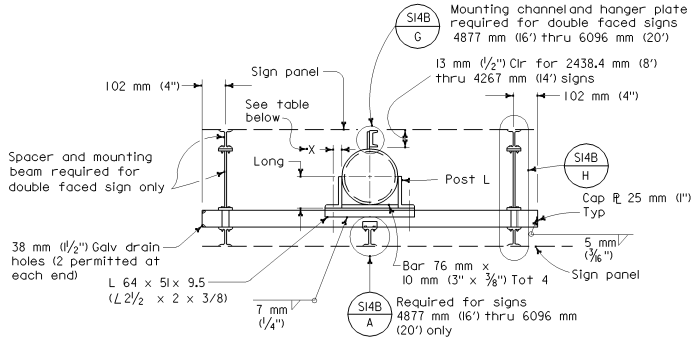

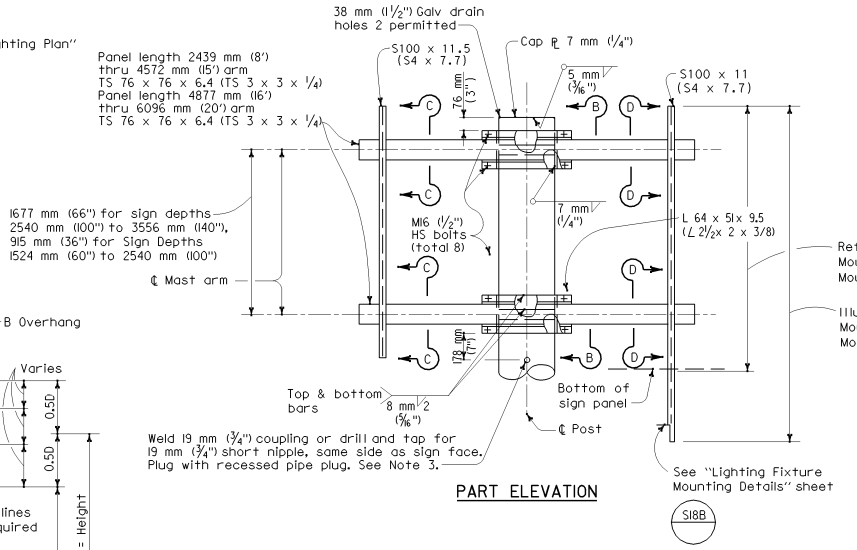

PART ELEVATION

MOUNTING BEAM SPACING

Sign Panel Length	Number Mounting Beams	Sign Panel Overhang	Mounting Beam Spacing	
A		B	C	E
1524 mm (5')	2	229 mm (9")	1066 mm (42")	
1829 mm (6')	2	305 mm (12")	1219 mm (48")	
2134 mm (7')	2	381 mm (15")	1372 mm (54")	
2438 mm (8')	2	457 mm (18")	1524 mm (60")	
2743 mm (9')	2	559 mm (22")	1625 mm (64")	
3048 mm (10')	2	610 mm (24")	1829 mm (72")	
3353 mm (11')	2	610 mm (24")	2134 mm (84")	
3657 mm (12')	2	762 mm (30")	2134 mm (84")	
3962 mm (13')	2	762 mm (30")	2438 mm (96")	
4267 mm (14')	2	762 mm (30")	2743 mm (108")	
4572 mm (15')	2	914.5 mm (36")	2743 mm (108")	
4877 mm (16')	3	152.5 mm (6")	2286 mm (90")	2286 mm (90")
5182 mm (17')	3	305 mm (12")	2286 mm (90")	2286 mm (90")
5486 mm (18')	3	305 mm (12")	2438 mm (96")	2438 mm (96")
5792 mm (19')	3	305 mm (12")	2591 mm (102")	2591 mm (102")
6096 mm (20')	3	457 mm (18")	2591 mm (102")	2591 mm (102")

NOTES:

1. For sections and detail not shown see S14B
2. For post and foundation details see Standard Plans S20A and S20B.
3. Drilled holes, plugs, conduit and handhole required on illuminated signs only.

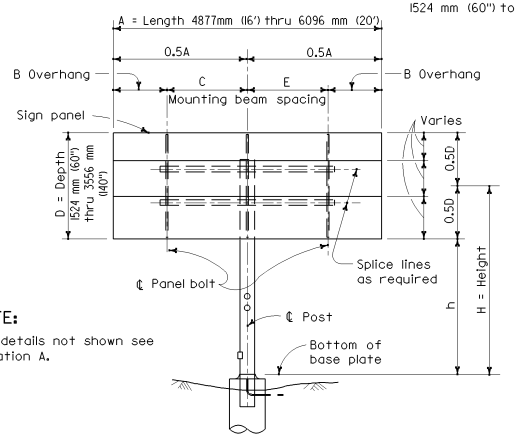

ELEVATION B

NOTE:

For details not shown see Elevation A.

Post Size (Pipe) NPS	Min "t"	Post Angles: Angle	X	Weld
6	7.11 mm (9/32")	89 mm x 76 mm x 12.7mm (3½" x 3" x ½")	45 mm (1¾")	7 mm (1/4")
6	10.97 mm (7/16")	89 mm x 76 mm x 12.7mm (3½" x 3" x ½")	45 mm (1¾")	7 mm (1/4")
8	8.18 mm (5/16")	127 mm x 76 mm x 12.7 mm (5" x 3" x ½")	45 mm (1¾")	7 mm (1/4")
8	12.7 mm (½")	127 mm x 76 mm x 12.7 mm (5" x 3" x ½")	45 mm (1¾")	7 mm (1/4")
10	12.7 mm (½")	152 mm x 102 mm x 15.9 mm (6" x 4" x ⅝")	64 mm (2½")	7 mm (1/4")
12	12.7 mm (½")	178 mm x 102 mm x 15.9 mm (7" x 4" x ⅝")	64 mm (2½")	8 mm (5/16")
14	12.7 mm (½")	203 mm x 102 mm x 19.0 mm (8" x 4" x ¾")	64 mm (2½")	8 mm (5/16")
14	15.88 mm (⅝")	203 mm x 102 mm x 19.0 mm (8" x 4" x ¾")	64 mm (2½")	8 mm (5/16")

STATE OF CALIFORNIA
DEPARTMENT OF TRANSPORTATION

OVERHEAD SIGNS-LIGHTWEIGHT BALANCED-SINGLE STEEL POST CONNECTION AND MOUNTING DETAILS

These "Standard Plans for Construction of Local Streets and Roads" contain units in two systems of measurement: International System of Units (SI or "metric") and United States Standard Measures shown in the parentheses ( ). The measurements expressed in the two systems are not necessarily equal or interchangeable. See the "Foreword" at the beginning of this publication.

NO SCALE

S14A

2002 DUAL UNITS STD PLAN S14A