DIST	COUNTY	ROUTE	KILOMETER POST TOTAL PROJECT	SHEET NO.	TOTAL SHEETS

Paul Cotter
REGISTERED CIVIL ENGINEER

July 1, 2002
PLANS APPROVAL DATE

REGISTERED PROFESSIONAL ENGINEER Paul Cotter No. C34509 EXP. 9-30-03 CIVIL STATE OF CALIFORNIA

The State of California or its officers or agents shall not be responsible for the accuracy or completeness of electronic copies of this plan sheet.

Caltrans now has a web site! To get to the web site, go to: http://www.dot.ca.gov

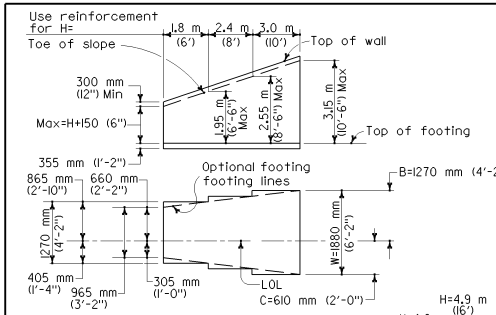

TYPICAL LAYOUT EXAMPLE

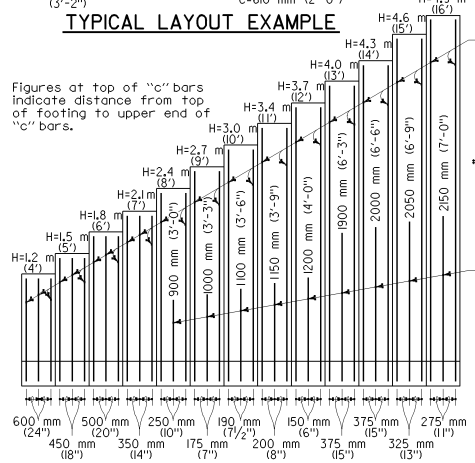

NOTE:

Where 1:1.5 (1½:1) surcharge exceeds 1.5 m (5'), use Type 2 retaining wall.

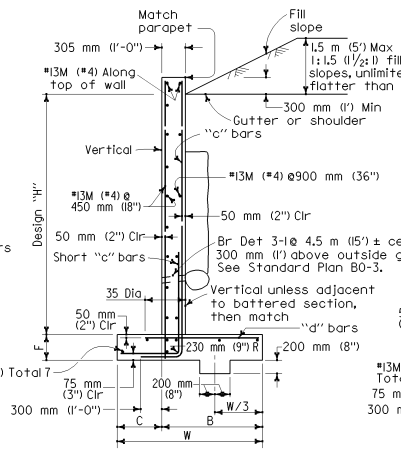

TYPICAL SECTION
H=1.2 m (4') THRU 3.7 m (12')

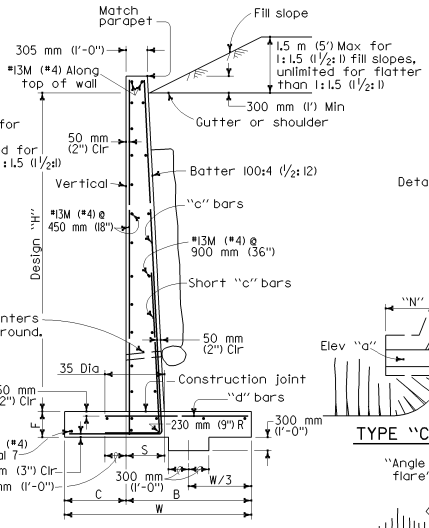

TYPICAL SECTION
H=4.0 m (13') THRU 4.9 m (16')

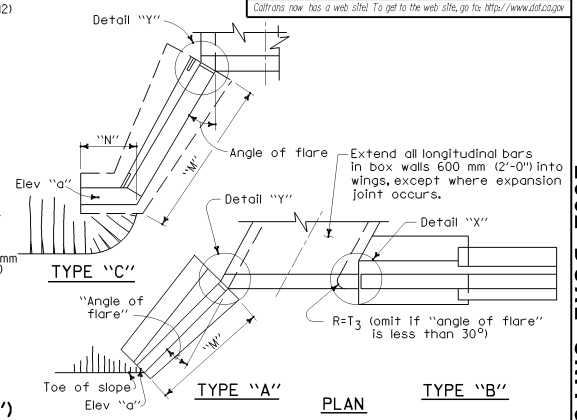

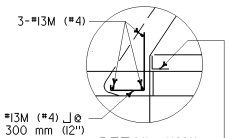

DETAIL "X"

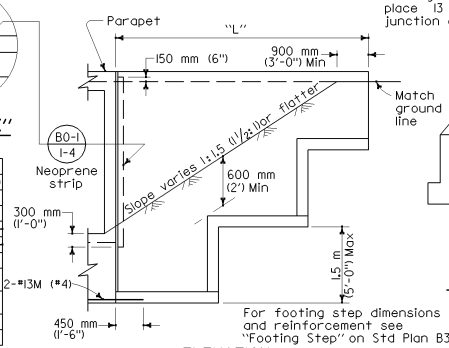

For footing step dimensions and reinforcement see "Footing Step" on Std Plan B3-8.

ELEVATION

Where design "H" exceeds 2.7 m (9') or length of wingwall exceeds 1.5 "H", place 13 mm (½") Exp joint filler at junction of box and wall.

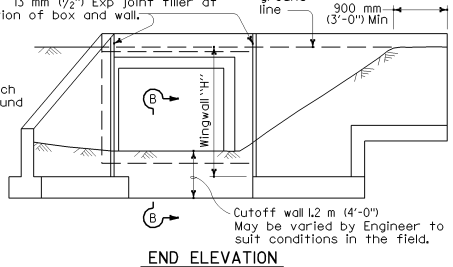

END ELEVATION

TYPE "A" TYPE "B"

STRAIGHT WINGWALLS

REINFORCED CONCRETE WINGWALLS

"H" m (ft)	1.2 (4')	1.5 (5')	1.8 (6')	2.1 (7')	2.4 (8')	2.7 (9')	3.0 (10')	3.4 (11')	3.7 (12')	4.0 (13')	4.3 (14')	4.6 (15')	4.9 (16')
W mm (ft-in)	965 (3'-2")	1120 (3'-8")	1270 (4'-2")	1420 (4'-8")	1575 (5'-2")	1730 (5'-8")	1880 (6'-2")	2030 (6'-8")	2185 (7'-2")	2335 (7'-8")	2490 (8'-2")	2640 (8'-8")	2795 (9'-2")
C mm (ft-in)	305 (1'-0")	355 (1'-2")	405 (1'-4")	455 (1'-6")	510 (1'-8")	560 (1'-10")	610 (2'-0")	660 (2'-2")	710 (2'-4")	760 (2'-6")	815 (2'-8")	865 (2'-10")	915 (3'-0")
B mm (ft-in)	660 (2'-2")	765 (2'-6")	865 (2'-10")	965 (3'-2")	1065 (3'-6")	1170 (3'-10")	1270 (4'-2")	1370 (4'-6")	1475 (4'-10")	1575 (5'-2")	1675 (5'-6")	1775 (5'-10")	1880 (6'-2")
F mm (ft-in)	355 (1'-2")												
Batter	None									4:100 (½:12)			
S mm (ft-in)	305 (1'-0")	305 (1'-0")	305 (1'-0")	305 (1'-0")	305 (1'-0")	305 (1'-0")	305 (1'-0")	305 (1'-0")	305 (1'-0")	465 (1'-6½")	475 (1'-7")	490 (1'-7½")	500 (1'-8")
"c" Bars	13M (#4) @ 600 (24")	13M (#4) @ 450 (18")	16M (#5) @ 500 (20")	16M (#5) @ 350 (14")	16M (#5) @ 250 (10")	16M (#5) @ 175 (7")	19M (#6) @ 190 (7½")	22M (#7) @ 200 (8")	22M (#7) @ 150 (6")	29M (#9) @ 375 (15")	32M (#10) @ 375 (15")	32M (#10) @ 325 (13")	32M (#10) @ 275 (11")
"d" Bars	13M (#4) @ 600 (24")	13M (#4) @ 450 (18")	16M (#5) @ 500 (20")	16M (#5) @ 350 (14")	16M (#5) @ 250 (10")	19M (#6) @ 350 (14")	22M (#7) @ 380 (15")	25M (#8) @ 400 (16")	22M (#7) @ 300 (12")	25M (#8) @ 375 (15")	29M (#9) @ 375 (15")	29M (#9) @ 325 (13")	29M (#9) @ 275 (11")
Conc m³/m (cy/lf)	0.80 (0.32)	0.95 (0.38)	1.10 (0.44)	1.23 (0.49)	1.38 (0.55)	1.53 (0.61)	1.68 (0.67)	1.83 (0.73)	1.98 (0.79)	2.56 (1.02)	2.76 (1.10)	2.96 (1.18)	3.16 (1.26)
Reinf kg/m (lb/lf)	19 (13)	24 (16)	28 (19)	37 (25)	45 (30)	55 (37)	73 (49)	92 (62)	113 (76)	109 (73)	134 (90)	155 (104)	186 (125)

Quantities do not include that portion above the design "H" limit.

NOTES:

Unit Stresses: f_s =165 MPa (24,000 psi), f_c=9 MPa (1,300 psi), n=10

Maximum Toe Pressure = 140 kPa (1½ Tons/sq.ft.)

Elevations, length and angle of flare of wings may be varied by the Engineer to suit conditions encountered in the field. Walls designed for 600 mm (2') liveload surcharge, 1:1.5 (1½:1) sloping surcharge not to exceed 1.5 m (5') in elevation plus 600 mm (2') liveload surcharge, or unlimited 1:2 (2:1) surcharge.

Dimensions "H","L","M","N", Elevation "a" and "Angle of flare" (as apply) are shown on the plans.

Wall height may be exceeded by 150 mm (6") before going to next greater "H".

Eliminate cutoff wall if adjacent channel is paved and skew is 20° maximum.

For wall offset values, see Standard Plan B3-8.

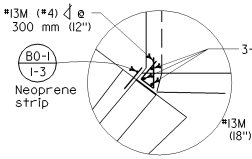

DETAIL "Y"

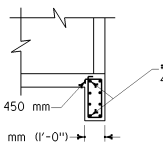

SECTION B-B

STATE OF CALIFORNIA
DEPARTMENT OF TRANSPORTATION

BOX CULVERT WINGWALLS TYPES A, B AND C

These "Standard Plans for Construction of Local Streets and Roads" contain units in two systems of measurement: International System of Units (SI or "metric") and United States Standard Measures shown in the parentheses ( ). The measurements expressed in the two systems are not necessarily equal or interchangeable. See the "Foreword" at the beginning of this publication.

NO SCALE

D84

THIS STANDARD PLAN D84 INCLUDES CHANGES THAT WERE INCORPORATED IN REVISED STANDARD PLAN RSP D84, DATED OCTOBER 26, 2000, AND ISSUED AS A PART OF ERRATUM NO. 99-1 FOR THE 1999 METRIC STANDARD PLANS.

2002 DUAL UNITS STD PLAN D84