Dist	COUNTY	ROUTE	POST MILES TOTAL PROJECT	SHEET No.	TOTAL SHEETS

REGISTERED CIVIL ENGINEER

October 30, 2015
PLANS APPROVAL DATE

Stanley P. Johnson
No. C57793
Exp. 3-31-16
CIVIL
STATE OF CALIFORNIA

THE STATE OF CALIFORNIA OR ITS OFFICERS OR AGENTS SHALL NOT BE RESPONSIBLE FOR THE ACCURACY OR COMPLETENESS OF SCANNED COPIES OF THIS PLAN SHEET.

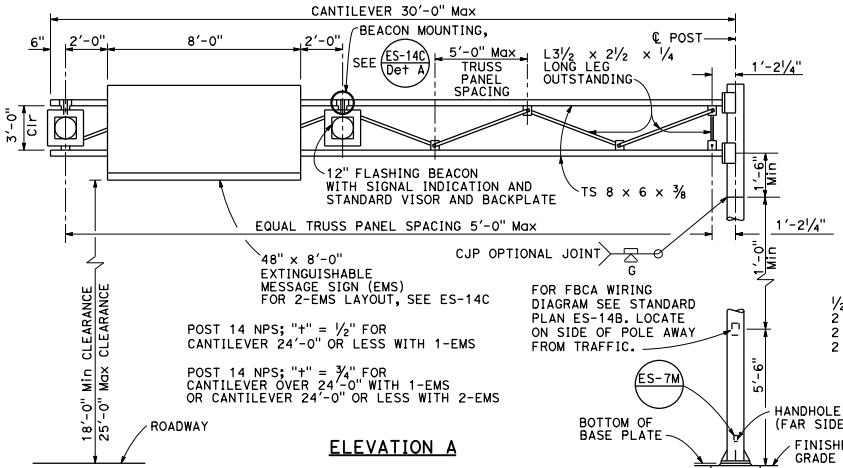

ELEVATION A

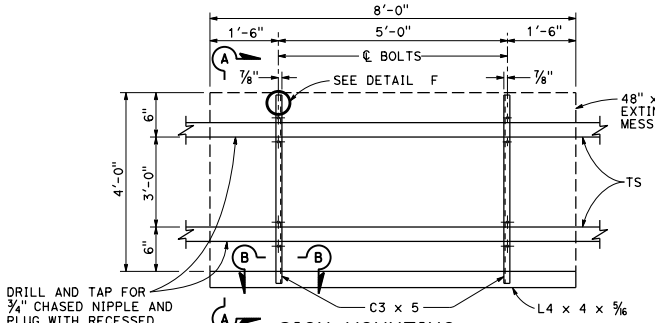

SIGN MOUNTING
DETAIL H

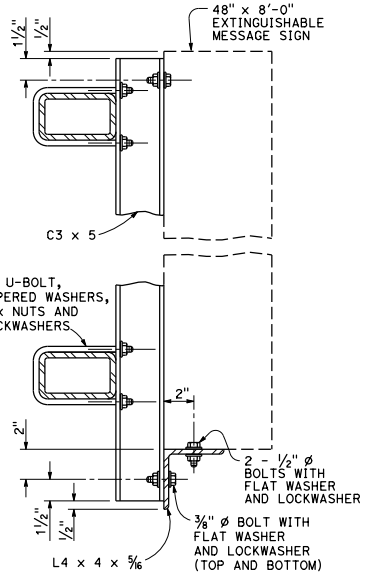

SECTION A-A

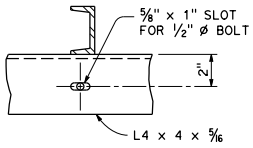

SECTION B-B

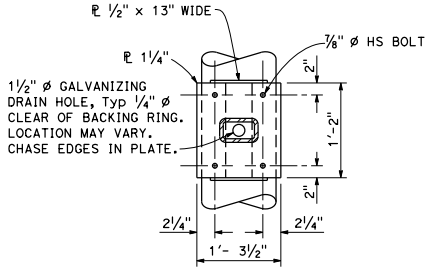

SECTION C-C

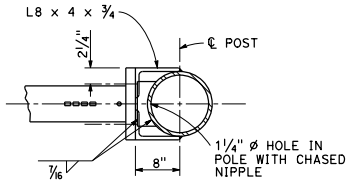

SECTION D-D

Steel not shown for clarity

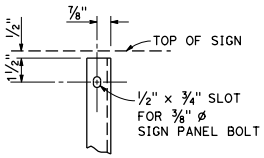

DETAIL F

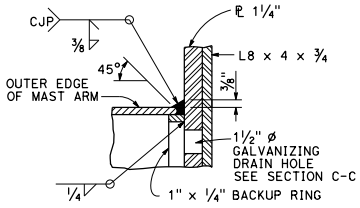

DETAIL G

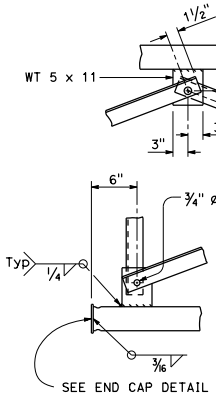

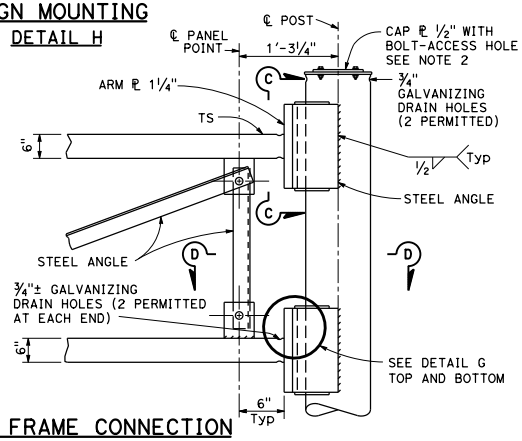

TRUSS FRAME CONNECTION
DETAIL I

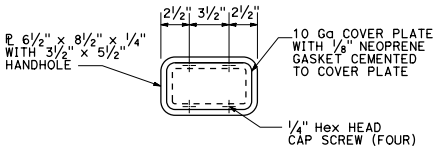

END CAP
DETAIL D

NOTES:

1. For sign structure dimensions, see Project Plans.
2. For Bolt-Access Hole Details, see Standard Plan S13

STATE OF CALIFORNIA
DEPARTMENT OF TRANSPORTATION

OVERHEAD SIGNS-LIGHTWEIGHT EXTINGUISHABLE MESSAGE SIGN AND FLASHING BEACONS

NO SCALE

S50

2015 STANDARD PLAN S50

9-22-15