Dist	COUNTY	ROUTE	POST MILES TOTAL PROJECT	SHEET No.	TOTAL SHEETS

REGISTERED CIVIL ENGINEER

October 30, 2015

PLANS APPROVAL DATE

REGISTERED PROFESSIONAL ENGINEER Tiliat Satter No. C42892 Exp. 3-31-16 CIVIL STATE OF CALIFORNIA

THE STATE OF CALIFORNIA OR ITS OFFICERS OR AGENTS SHALL NOT BE RESPONSIBLE FOR THE ACCURACY OR COMPLETENESS OF SCANNED COPIES OF THIS PLAN SHEET.

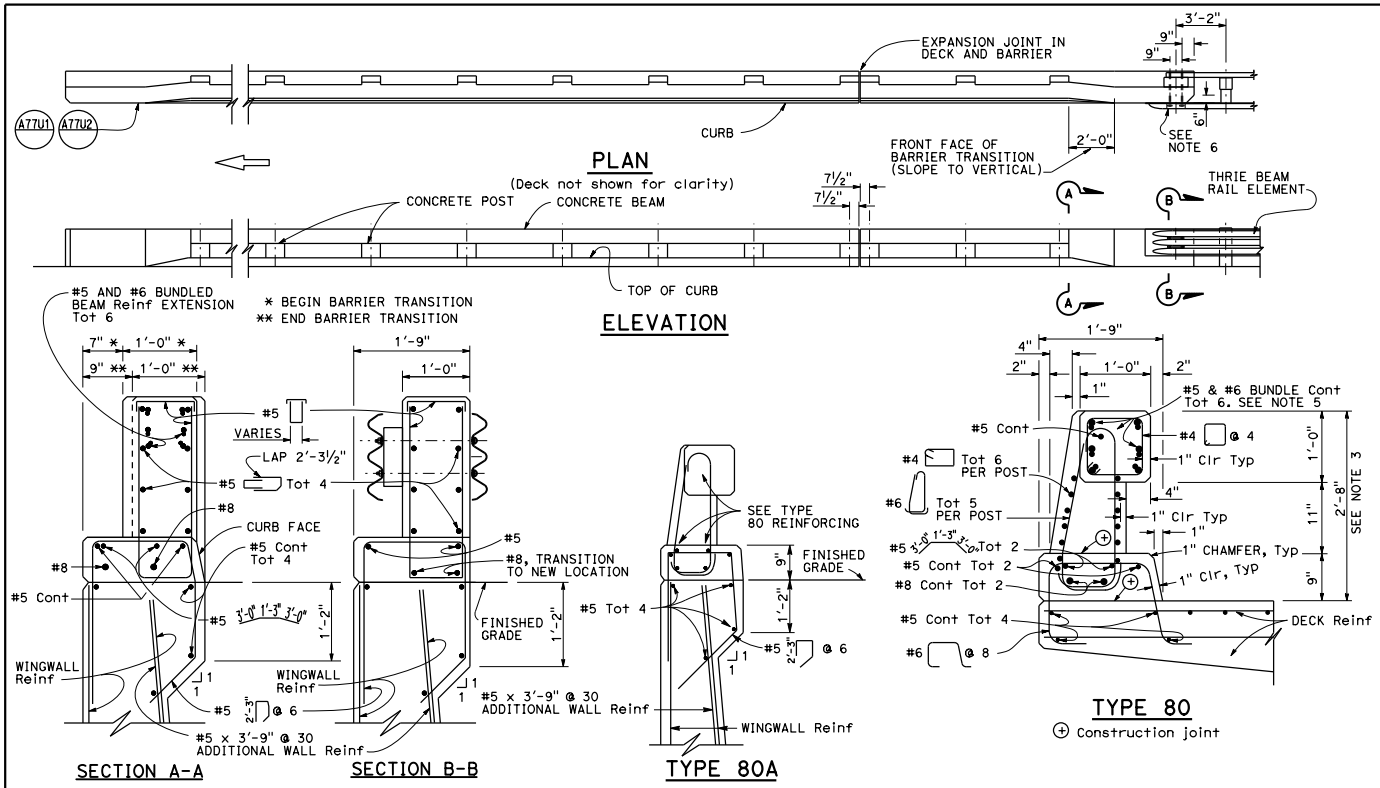

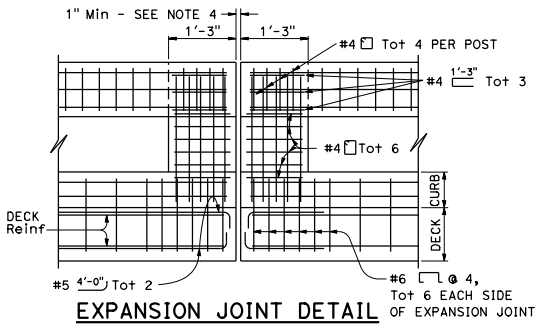

EXPANSION JOINT DETAIL

NOTES:

1. Walls are to be backfilled before the barrier is placed.
2. Longitudinal reinforcing steel to stop at all expansion joints.
3. The front face dimensions are to be constant above the finish roadway profile, but the overall height will vary with certain thicknesses of surfacing and roadway slopes.
4. Expansion joint to match deck joint.
5. No lap splicing allowed on the longitudinal rail reinforcing. Splicing shall be staggered.
6. For typical metal railing connection details not shown, see Standard Plans A77U1 and A77U2.
7. Chain link railing is not allowed on Type 80 Barriers.
8. Post to be spaced equally, typically 6'-6" spacing. Post spacing may be reduced where location of hinges or expansion joints or the length of wingwalls will not accommodate the 6'-6" spacing. Maximum see-through availability is to be strived for, where 6'-6" post spacing can not be achieved.

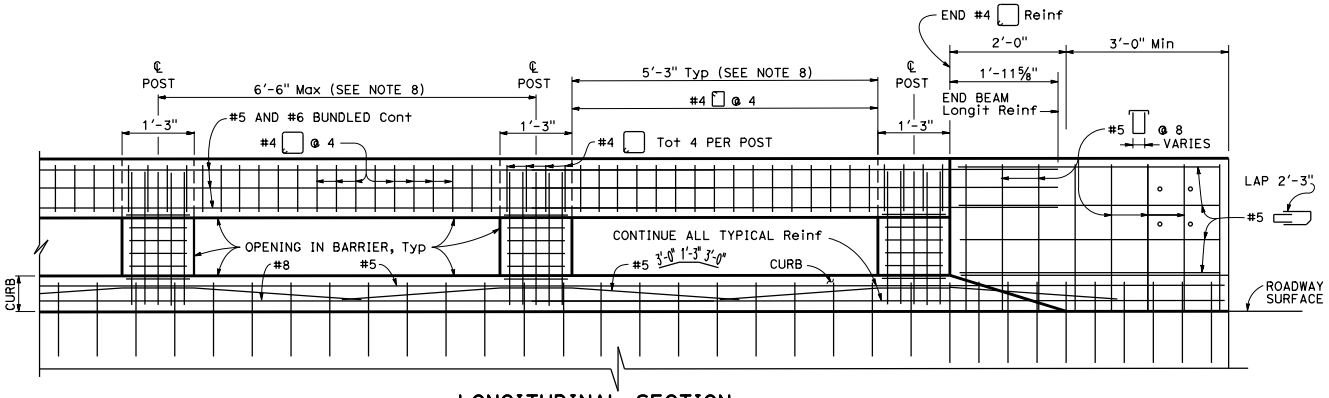

LONGITUDINAL SECTION

(Deck or wingwall reinforcing not shown)

STATE OF CALIFORNIA
DEPARTMENT OF TRANSPORTATION

CONCRETE BARRIER TYPE 80 (SHEET 1 OF 2)

NO SCALE

B11-60

2015 STANDARD PLAN B11-60

9-22-15