DIST	COUNTY	ROUTE	POST MILES TOTAL PROJECT	SHEET NO.	TOTAL SHEETS

REGISTERED CIVIL ENGINEER

May 1, 2006
PLANS APPROVAL DATE

REGISTERED PROFESSIONAL ENGINEER
Jeffrey B. Woody
No. C41260
Exp. 3-31-07
CIVIL
STATE OF CALIFORNIA

The State of California or its officers or agents shall not be responsible for the accuracy or completeness of electronic copies of this plan sheet.

To get to the Caltrans web site, go to: http://www.dot.ca.gov

NOTE:

Diagonal ∠s in plane of truss not shown. Bracing shown is at all vertical ∠s of truss.

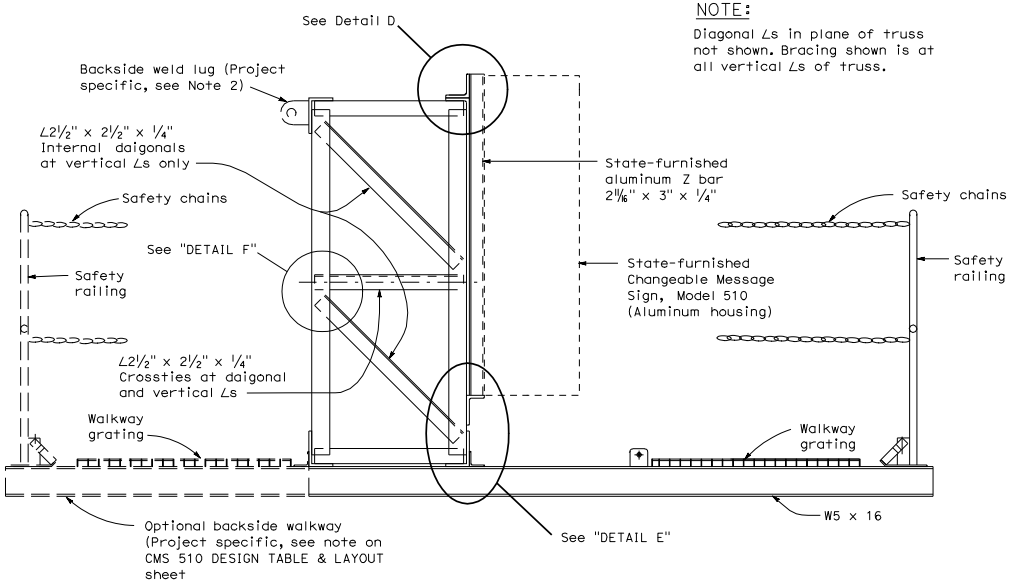

TYPICAL FRAME SECTION

NOTES:

1. Internal walkway members not shown.
2. Interior grating and backside weld lugs shall be installed only for projects requiring backside walkways.

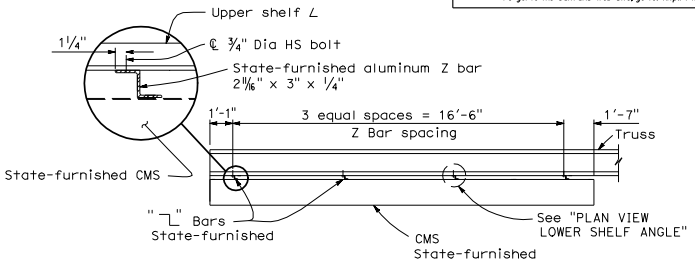

ALUMINUM Z BAR SPACING

NOTE:

Z bar spacing and orientation may vary slightly.

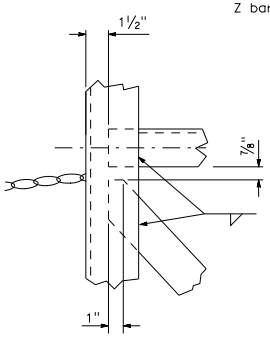

DETAIL F

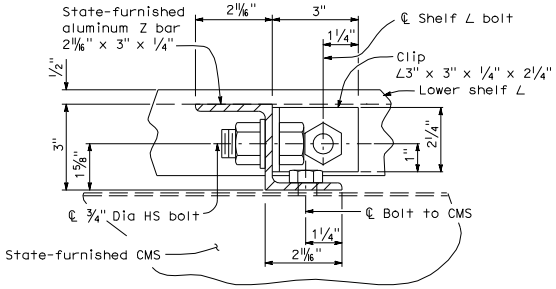

PLAN VIEW LOWER SHELF ANGLE

For Z bar connections only, field drill aluminum Z bar ⅞" Dia hole for ¾" Dia HS bolt with hardened flat washer each side, lock washer between nut and hardened flat washer. HS bolts shall be snug tight

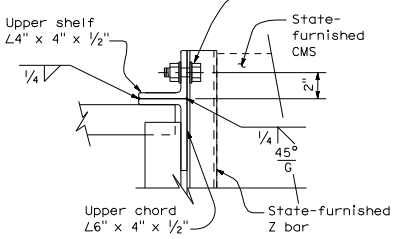

DETAIL D

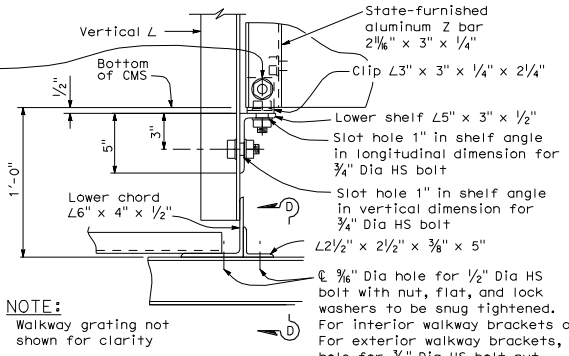

NOTE:

Walkway grating not shown for clarity

DETAIL E

℄ 9/16" Dia hole for ½" Dia HS bolt with nut, flat, and lock washers to be snug tightened. For interior walkway brackets only. For exterior walkway brackets, drill 13/16" hole for ¾" Dia HS bolt nut, 2 flat washers and one lock washer. Snug tighten assemblies.

STATE OF CALIFORNIA
DEPARTMENT OF TRANSPORTATION

OVERHEAD SIGN-TRUSS SINGLE POST TYPE MOUNTING DETAILS CHANGEABLE MESSAGE SIGNS MODEL 510

NO SCALE

S132

1-31-06

2006 STANDARD PLAN S132