| DIST | COUNTY | ROUTE | POST MILES TOTAL PROJECT | SHEET NO. | TOTAL SHEETS |
|---|---|---|---|---|---|
| | | | | | |

REGISTERED CIVIL ENGINEER

May 1, 2006
PLANS APPROVAL DATE

REGISTERED PROFESSIONAL ENGINEER — Jeffrey B. Woody — No. C41260 — Exp. 3-31-07 — CIVIL — STATE OF CALIFORNIA

*The State of California or its officers or agents shall not be responsible for the accuracy or completeness of electronic copies of this plan sheet.*

*To get to the Caltrans web site, go to: http://www.dot.ca.gov*

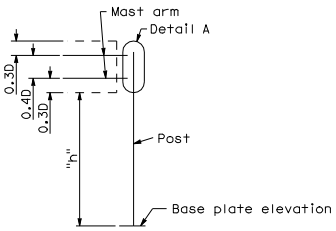


DOUBLE MAST ARM SERIES
TYPE C-1

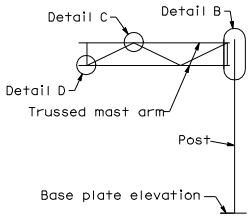


TRUSSED MAST ARM SERIES
TYPE C-2

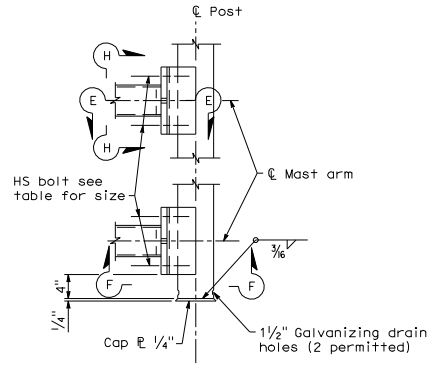


DETAIL A

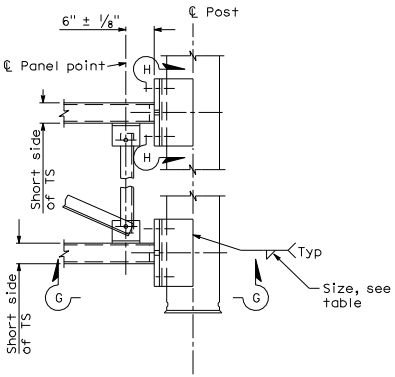


DETAIL B

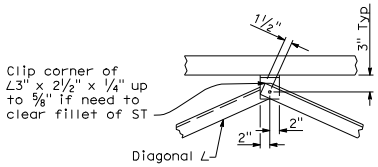


DETAIL C

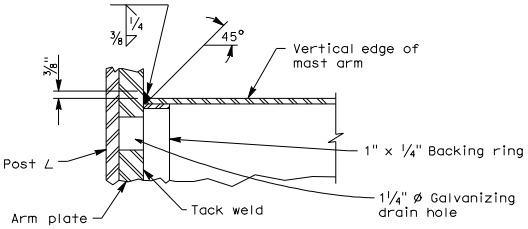


SECTION E-E

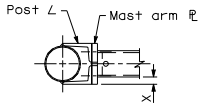


SECTION F-F

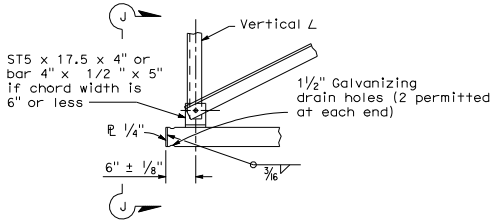


DETAIL D

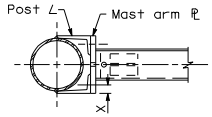


SECTION G-G

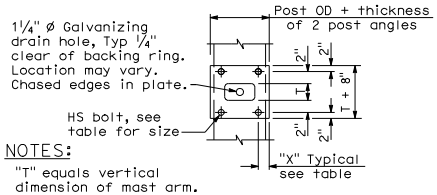


NOTES:
"T" equals vertical dimension of mast arm. Bottom connection shown. Top similar.

SECTION H-H

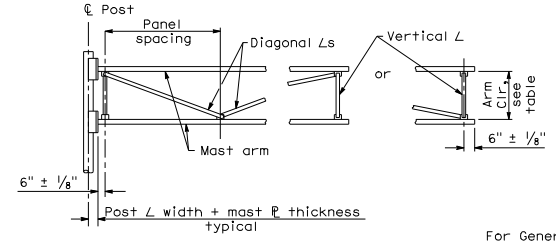


TRUSS FRAMING DATA

| SIGN DEPTH | ARM CLEARANCE | MAX PANEL SPACING | VERTICAL ANGLE | DIAGONAL ANGLE |
|---|---|---|---|---|
| D=40" to 70" | 2'-0" | 4'-4" | 2" x 2" x 1/4" | 2" x 2" x 1/4" |
| D=80" to 100" | 3'-0" | 6'-6" | 3 1/2" x 2 1/2" x 1/4" | 3 1/2" x 2 1/2" x 1/4"* |

* Short leg outstanding

For General Notes see S48.

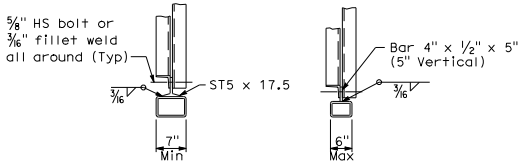


SECTION J-J

| POST ANGLES | | | |
|---|---|---|---|
| NPS | ANGLE | X | WELD |
| 6" | ∠5" x 3" x 1/2" | 1 3/4" | 1/4" |
| 8" | ∠6" x 4" x 5/8" | 2 1/4" | 1/4" |
| 10" | ∠7" x 4" x 5/8" | | 1/4" |
| 12" | ∠8" x 4" x 3/4" | | 5/16" |
| 14" | ∠8" x 4" x 3/4" | | 5/16" |

POST TO ARM FRAMING DATA

| MAST ARM PLATE | | | |
|---|---|---|---|
| TWO ARMS | TRUSSED ARMS | PLATE | HS BOLT |
| TS3 x 3 x 1/4 | | 3/4" | 1/2" |
| TS4 x 4 x 1/4 | | 1" | 5/8" |
| TS5 x 5 x 1/4 | | 1" | 3/4" |
| TS6 x 6 x 1/4 | | 1" | 3/4" |
| TS7 x 7 x 1/4 | TS5 x 3 x 3/8 | 1 1/4" | 3/4" |
| | TS6 x 4 x 3/8 | | 7/8" |
| | TS7 x 5 x 3/8 | | 7/8" |
| | TS8 x 6 x 3/8 | | 7/8" |
| | TS10 x 6 x 3/8 | | 1" |

NOTES:

For post connection to base ℙ see S48.

For mast arm length and mast-arm-to sign panel connections see S46.

See other plan sheets for:

1. Sign type and location.
2. Panel type and location on structure.
3. Post size and dimension "h".
4. Mast arm size.
5. Foundation type.
6. Illumination if required.

STATE OF CALIFORNIA
DEPARTMENT OF TRANSPORTATION

# OVERHEAD SIGNS-LIGHTWEIGHT TYPE C CONNECTIONS DETAILS

NO SCALE

S45

2006 STANDARD PLAN S45

1-4-06