| DIST | COUNTY | ROUTE | POST MILES TOTAL PROJECT | SHEET NO. | TOTAL SHEETS |
|---|---|---|---|---|---|
| | | | | | |

REGISTERED CIVIL ENGINEER

May 1, 2006
PLANS APPROVAL DATE

REGISTERED PROFESSIONAL ENGINEER — Jeffrey B. Woody — No. C41260 — Exp. 3-31-07 — CIVIL — STATE OF CALIFORNIA

*The State of California or its officers or agents shall not be responsible for the accuracy or completeness of electronic copies of this plan sheet.*

*To get to the Caltrans web site, go to: http://www.dot.ca.gov*

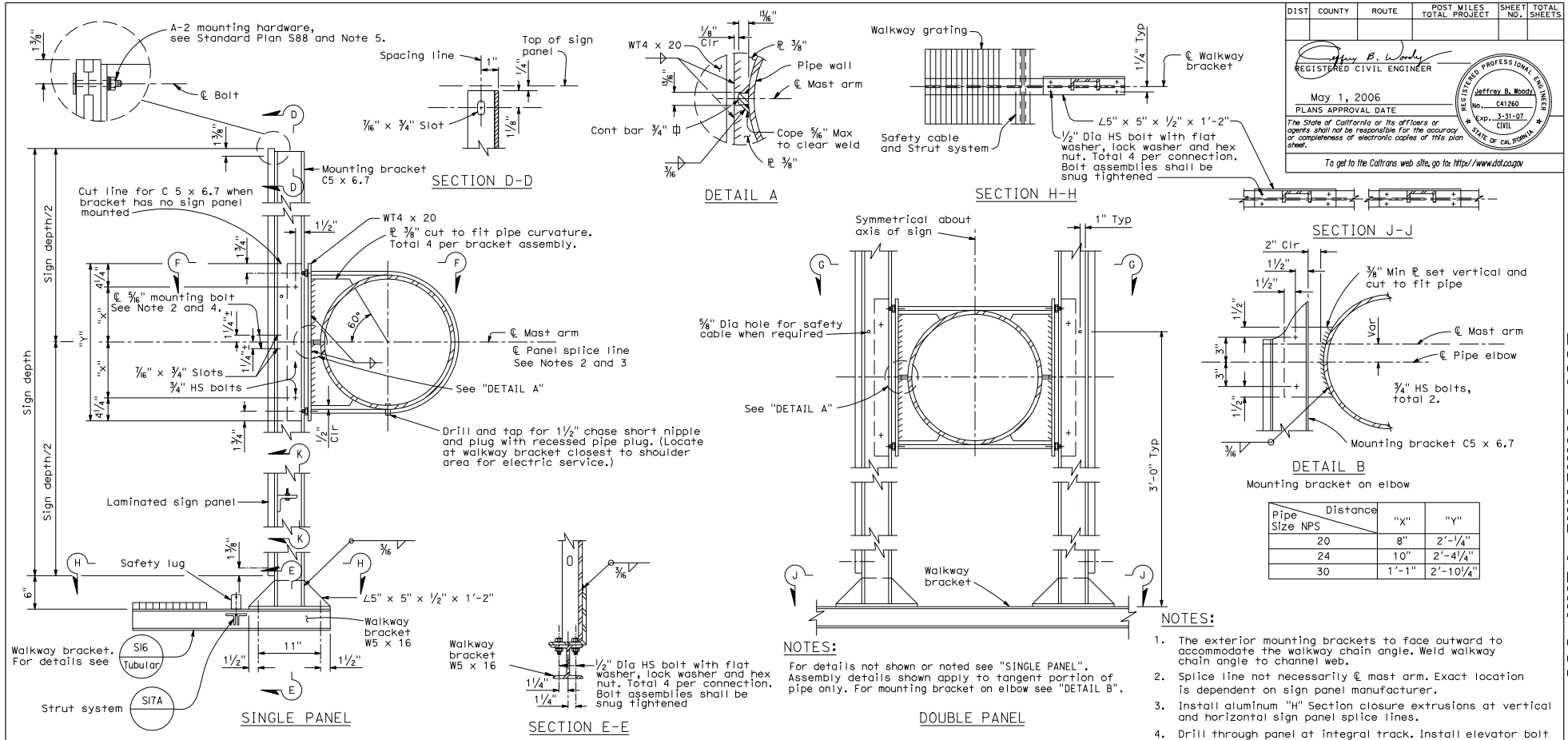


| Pipe Size NPS \ Distance | "X" | "Y" |
|---|---|---|
| 20 | 8" | 2'-1/4" |
| 24 | 10" | 2'-4 1/4" |
| 30 | 1'-1" | 2'-10 1/4" |

NOTES:

For details not shown or noted see "SINGLE PANEL". Assembly details shown apply to tangent portion of pipe only. For mounting bracket on elbow see "DETAIL B".

NOTES:

1. The exterior mounting brackets to face outward to accommodate the walkway chain angle. Weld walkway chain angle to channel web.
2. Splice line not necessarily ℄ mast arm. Exact location is dependent on sign panel manufacturer.
3. Install aluminum "H" Section closure extrusions at vertical and horizontal sign panel splice lines.
4. Drill through panel at integral track. Install elevator bolt with interstate green reflective tape. Typical at panel splice.
5. Drill through panel at integral track. Install elevator head bolt and attach reflective tape. Typical at border.
6. For walkway chain details, see Standard Plan S18.

## MOUNTING BRACKET ASSEMBLY DETAILS

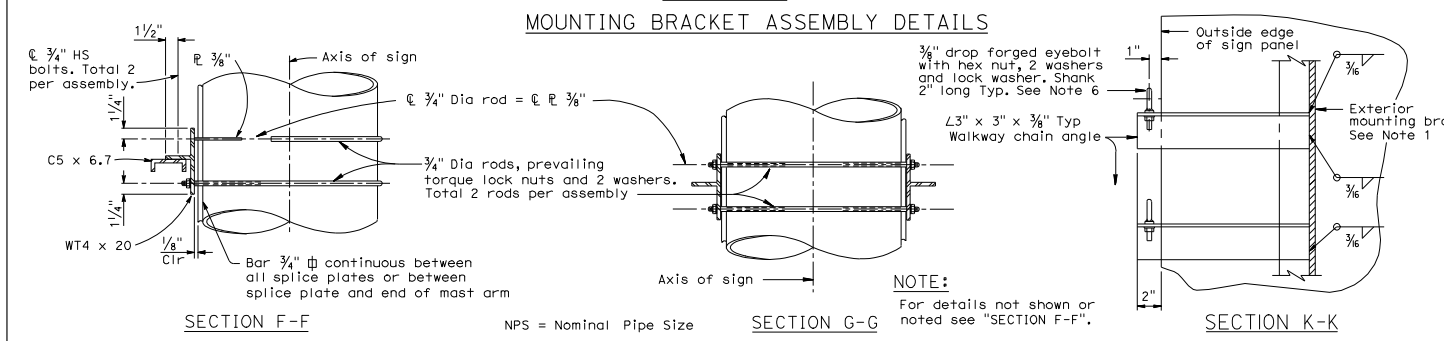


NPS = Nominal Pipe Size

NOTE:

For details not shown or noted see "SECTION F-F".

STATE OF CALIFORNIA
DEPARTMENT OF TRANSPORTATION

# OVERHEAD SIGNS-TUBULAR STRUCTURAL FRAME DETAILS No. 1

NO SCALE

**S33**

**2006 STANDARD PLAN S33**

1-4-06