DIST	COUNTY	ROUTE	POST MILES TOTAL PROJECT	SHEET NO.	TOTAL SHEETS

REGISTERED CIVIL ENGINEER

May 1, 2006

PLANS APPROVAL DATE

REGISTERED PROFESSIONAL ENGINEER Jeffrey B. Woody No. C41260 Exp. 3-31-07 CIVIL STATE OF CALIFORNIA

The State of California or its officers or agents shall not be responsible for the accuracy or completeness of electronic copies of this plan sheet.

To get to the Caltrans web site, go to: http://www.dot.ca.gov

NOTES:

1. For "General Notes" see Standard Plan S1.
2. Longer side of post and footing (longitudinal) shall be normal to axis of sign.
3. Backfill shall be in place prior to erection of post.
4. Thread upper 10" of anchor bolts and galvanize upper 1'-0".
5. Spread footing with square pedestal shown, use pile foundation when shown on the Project Plans. For pile foundation details, see Standard Plans S14 and S15.
6. Anchor plates may be retained with hex nut or formed head as an alternative to details shown.
7. When foundation is located on a steep slope with exposed face of concrete adjacent to traffic, see "Detail C" on Standard Plan S14 and S15.
8. Slope protection required when indicated on Project Plans.
9. Weld coupling or drill and tap for 1½"C chase nipple, perpendicular to sign panel axis away from approaching traffic. Plug with recessed pipe plug. See Standard Plan ES-15C.
10. Excavate to neat lines and place concrete against undisturbed material.
11. Grind edges smooth according to AWS D1.1 Section 5.15.4.3.

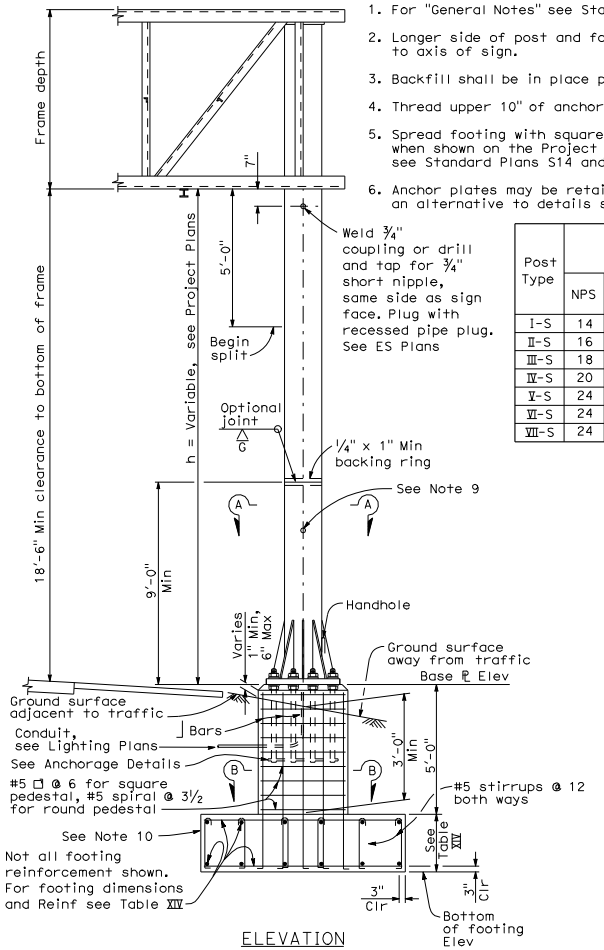

ELEVATION
See Note 5

TABLE XIV

Post Type	Pipe			Round Pedestal					Square Pedestal						Spread Footing					
				Pedestal Size	Vertical ⌋-Bars		Spiral		Pedestal size	Vertical ⌋-Bars			Hoop		(See Note 2)	Reinforcement				Footing Stirrups
																Width		Longitudinal		
	NPS	Thickness	Split	Dia	Equally spaced total	Bar Size	Bar Size	Pitch	Square	Equally spaced total	Bar Size	# of Bars ea face	Bar Size	Spacing		Top	Bottom	Top	Bottom	
I-S	14	½"	5"	5'-3"	16	#10	#5	3½"	5'-3"	16	#10	5	#5	6"	7'-0" x 13'-0" x 2'-6"	14-#6	14-#7	10-#9	10-#9	#5 @ 12
II-S	16		6"												7'-0" x 13'-0" x 2'-6"	14-#6	14-#7	10-#9	10-#9	
III-S	18		7"												7'-0" x 13'-0" x 2'-6"	14-#6	14-#7	11-#9	11-#9	
IV-S	20		8"												8'-0" x 14'-0 x 2'-6"	15-#7	15-#7	12-#9	12-#11	
V-S	24		8"	5'-9"		#11			5'-9"		#11				8'-0" x 16'-0" x 3'-0"	17-#7	17-#7	12-#9	12-#11	
VI-S	24	3/32"	10"	5'-9"		#11			5'-9"		#11				9'-0" x 17'-0" x 3'-0"	18-#7	18-#7	12-#9	12-#11	
VII-S	24	3/32"	10"	5'-9"		#11			5'-9"		#11				10'-0 x 18'-0" x 3'-0"	19-#7	19-#7	13-#9	13-#11	

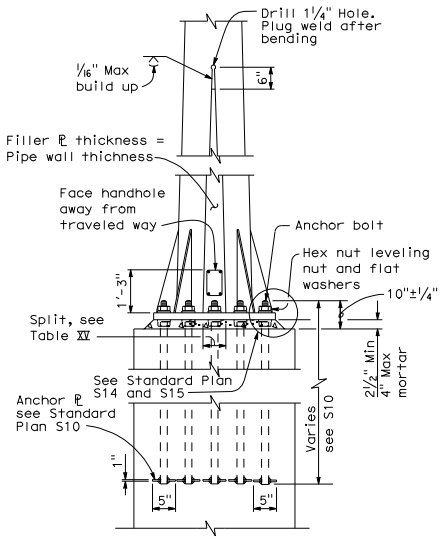

ELEVATION
SIDE VIEW

ANCHORAGE DETAILS

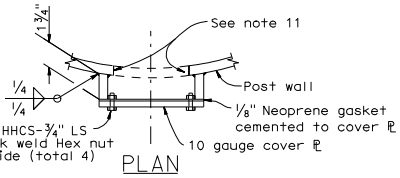

PLAN

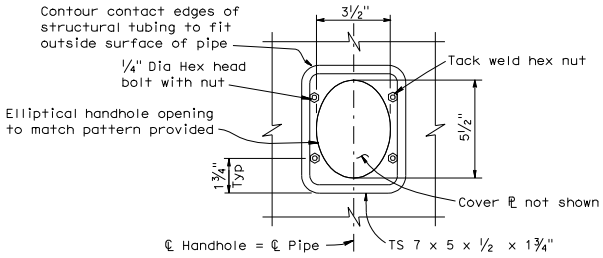

ELEVATION

TYPICAL DETAILS OF HANDHOLE AND COVER

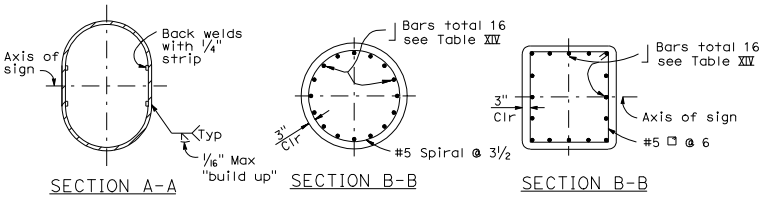

SECTION A-A

SECTION B-B

SECTION B-B

ROUND PEDESTAL SQUARE PEDESTAL

STATE OF CALIFORNIA
DEPARTMENT OF TRANSPORTATION

OVERHEAD SIGNS-TRUSS TWO POST TYPE POST TYPES I-S THROUGH VII-S

NO SCALE

S9

2006 STANDARD PLAN S9

1-4-06