DIST	COUNTY	ROUTE	POST MILES TOTAL PROJECT	SHEET NO.	TOTAL SHEETS

LICENSED LANDSCAPE ARCHITECT

May 1, 2006
PLANS APPROVAL DATE

The State of California or its officers or agents shall not be responsible for the accuracy or completeness of electronic copies of this plan sheet.

LICENSED LANDSCAPE ARCHITECT
Gregory A. Balzer 2516
Designature
02-28-2007
Renewal Date
10-11-2005
Date
STATE OF CALIFORNIA

To get to the Caltrans web site, go to: http://www.dot.ca.gov

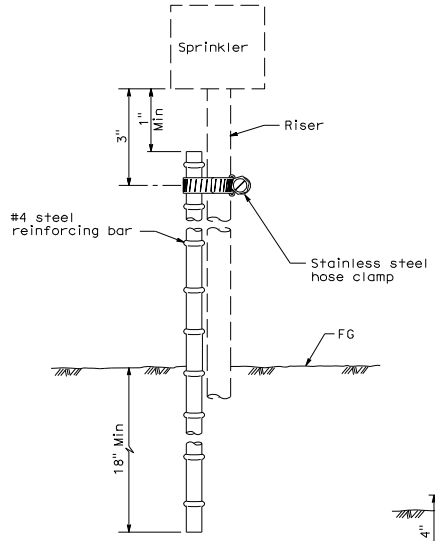

ELEVATION
RISER SUPPORT

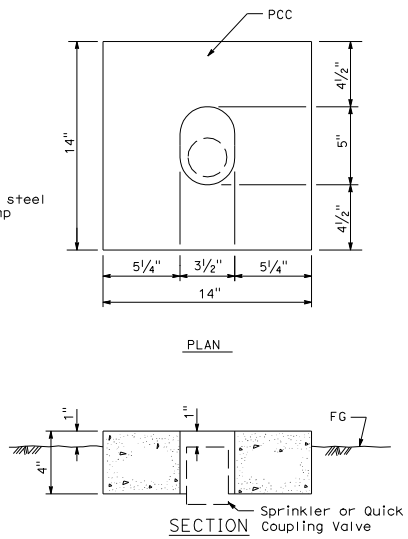

SECTION
SPRINKLER PROTECTOR TYPE I

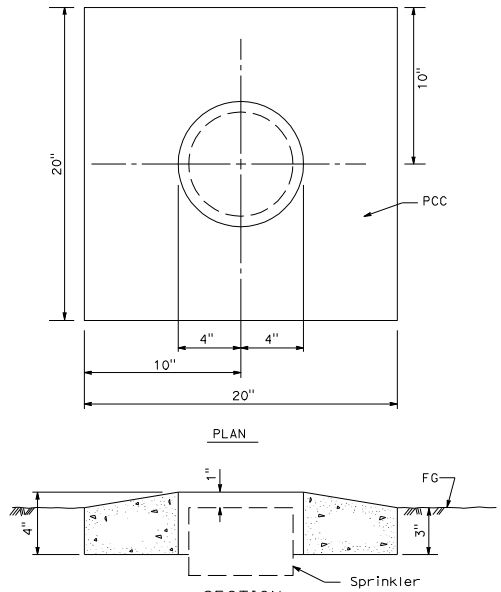

SECTION
SPRINKLER PROTECTOR TYPE II

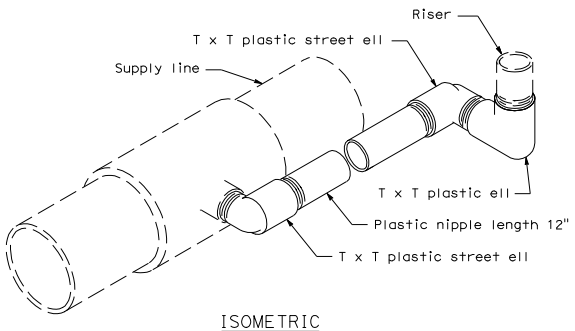

ISOMETRIC
SWING JOINT TYPE I

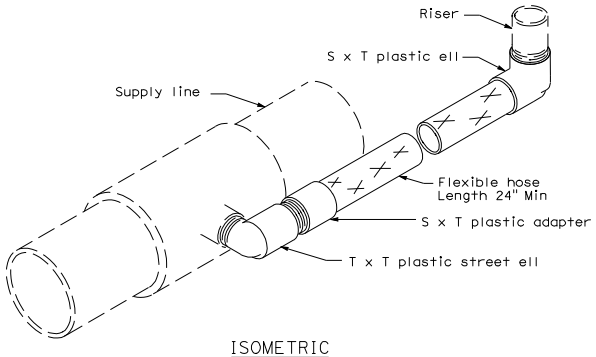

ISOMETRIC
SWING JOINT TYPE II

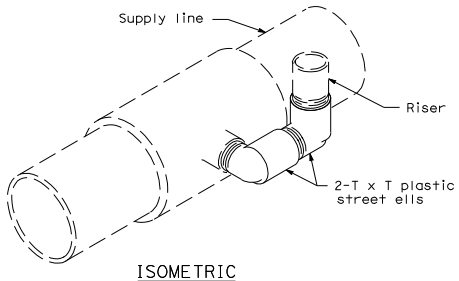

ISOMETRIC
SWING JOINT TYPE III

STATE OF CALIFORNIA
DEPARTMENT OF TRANSPORTATION

PLANTING AND IRRIGATION DETAILS

NO SCALE

H6

07-12-05

2006 STANDARD PLAN H6