DIST	COUNTY	ROUTE	POST MILES TOTAL PROJECT	SHEET NO.	TOTAL SHEETS

REGISTERED CIVIL ENGINEER

May 1, 2006

PLANS APPROVAL DATE

REGISTERED PROFESSIONAL ENGINEER Jeffrey B. Woody No. C41260 Exp. 3-31-07 CIVIL STATE OF CALIFORNIA

The State of California or its officers or agents shall not be responsible for the accuracy or completeness of electronic copies of this plan sheet.

To get to the Caltrans web site, go to: http://www.dot.ca.gov

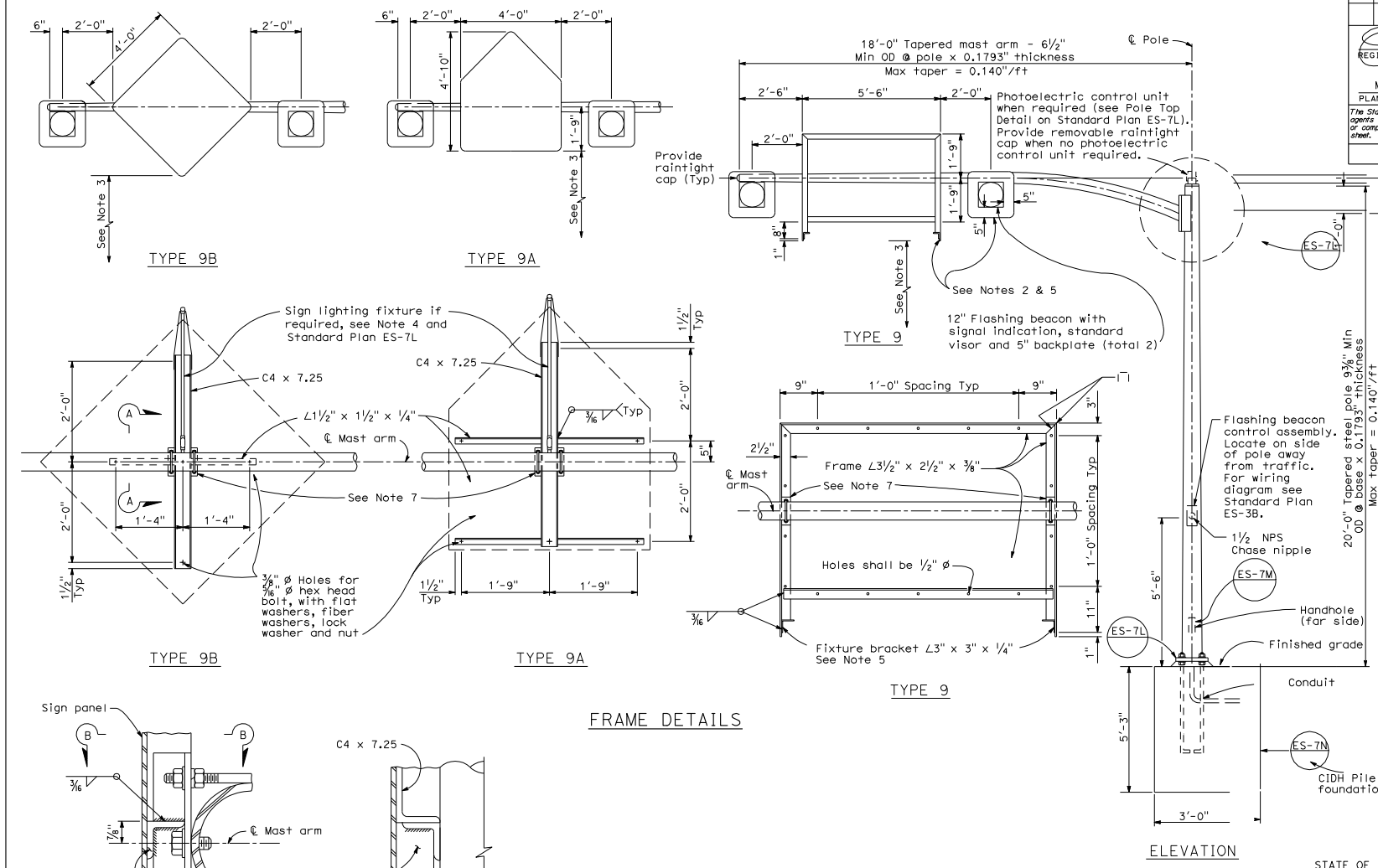

NOTES:

1. Splices between fluorescent fixture sockets shall be waterproof.
2. Install flashing beacons and sign frame. Flashing beacons to be MAT mounted on pipe tenon. (See Standard Plan ES-7M, Detail S).
3. Vertical clearance to be 17'-0" minimum between roadway and bottom of signal panel or lighting fixture bracket.
4. Special Provisions or plans will indicate when incandescent lighting fixture is required on Type 9A or 9B sign frames.
5. Type 9 sign frames shall be provided with a 3'-0" fluorescent fixture. For fluorescent lighting details see Standard Plan ES-15B.
6. Anchor bolts shall be ASTM A-307.
7. See Standard Plan ES-7L for sign frame mounting details.

STATE OF CALIFORNIA
DEPARTMENT OF TRANSPORTATION

ELECTRICAL SYSTEMS (SIGNAL AND LIGHTING STANDARD CANTILEVER FLASHING BEACON TYPES 9, 9A AND 9B)

NO SCALE

ES-7K

2006 STANDARD PLAN ES-7K

1-4-06