Pole Type	Pole Data			Base Plate Data					CIDH Pile Data		
	Height "H"	Min OD Base	Min Thickness Base	Dia	Thickness	Anchor Bolts			"D"	"L"	Pile Reinf
						Total	Size "d"	BC			
HM 80	80'-0"	1'-6"	0.1875"	2'-6½"	2"	4	2"	2'-1"	3'-6"	10'-0"	10-#8
HM 100	100'-0"	1'-7½"	0.1875"	2'-6½"	2"	6	2"	2'-1"	3'-6"	11'-0"	13-#8
HM 120	120'-0"	1'-10¼"	0.250"	3'-1½"	2"	6	2"	2'-8"	4'-0"	12'-0"	20-#8
HM 160	160'-0"	2'-2½"	0.250"	3'-7"	2½"	6	2½"	3'-0"	4'-6"	15'-0"	25-#8

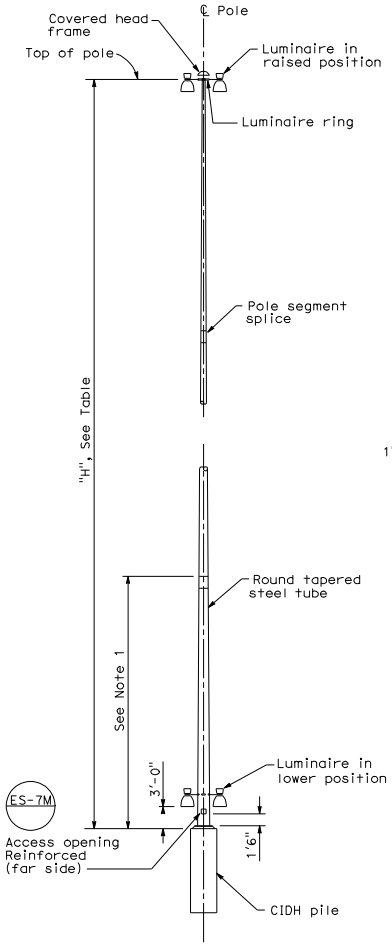

POLE DETAILS

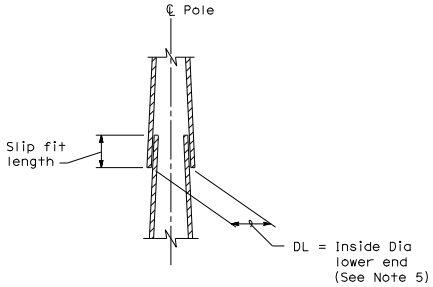

POLE SEGMENT SPLICE DETAIL

See Note 5

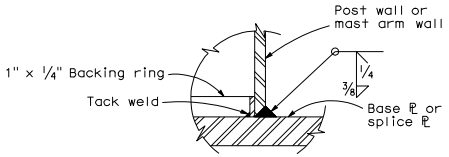

WELD DETAIL

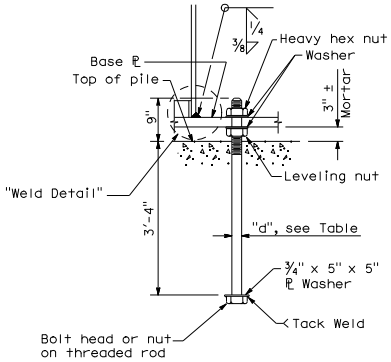

ANCHOR BOLT DETAIL

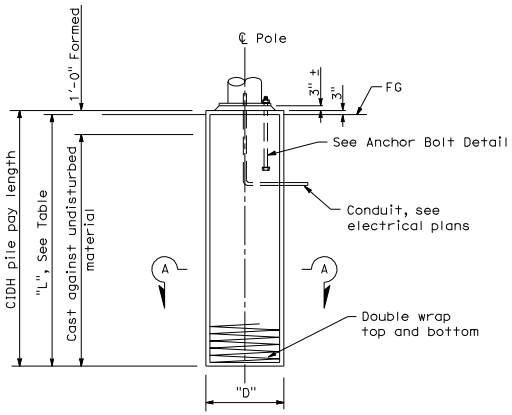

TYPICAL ELEVATION

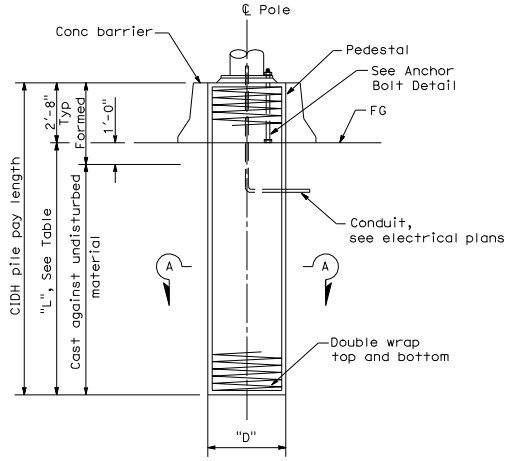

MEDIAN LOCATION

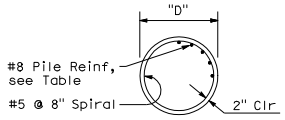

SECTION A-A

CIDH PILE DETAILS

DIST	COUNTY	ROUTE	POST MILES TOTAL PROJECT	SHEET NO.	TOTAL SHEETS

REGISTERED CIVIL ENGINEER

May 1, 2006

PLANS APPROVAL DATE

REGISTERED PROFESSIONAL ENGINEER Jeffrey B. Woody No. C41260 Exp. 3-31-07 CIVIL STATE OF CALIFORNIA

The State of California or its officers or agents shall not be responsible for the accuracy or completeness of electronic copies of this plan sheet.

To get to the Caltrans web site, go to: http://www.dot.ca.gov

NOTES:

1. Pole details shall suit the lowering device and this foundation plan. Pole details shall be submitted to the Engineer for approval.
2. Pole finish shall be galvanized.
3. For number of luminaires to be mounted on the pole, see Electrical Plans.
4. Foundation design is based on a maximum of 10 luminaires. Design wind velocity 80 mph.
5. Slip fit length shall not be less than 1.5 DL.
6. Base plate shape optional.

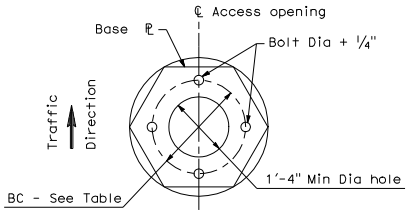

4 BOLTS

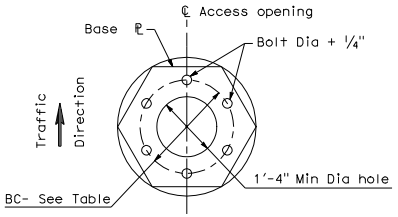

6 BOLTS

BASE PLATE DETAILS

See Note 6

STATE OF CALIFORNIA
DEPARTMENT OF TRANSPORTATION

ELECTRICAL SYSTEMS (LIGHTING STANDARD 80' TO 160' HIGH MAST LIGHT POLE FOUNDATION DETAILS)

NO SCALE

2006 STANDARD PLAN ES-6J

ES-6J

1-4-06