DIST	COUNTY	ROUTE	POST MILES TOTAL PROJECT	SHEET NO.	TOTAL SHEETS

REGISTERED/CIVIL ENGINEER

May 1, 2005
PLANS APPROVAL DATE

REGISTERED PROFESSIONAL ENGINEER Douglas J. Dunrud No. C47240 Exp. 12-31-07 CIVIL STATE OF CALIFORNIA

The State of California or its officers or agents shall not be responsible for the accuracy or completeness of electronic copies of this plan sheet.

To get to the Caltrans web site,go to: http://www.dot.ca.gov

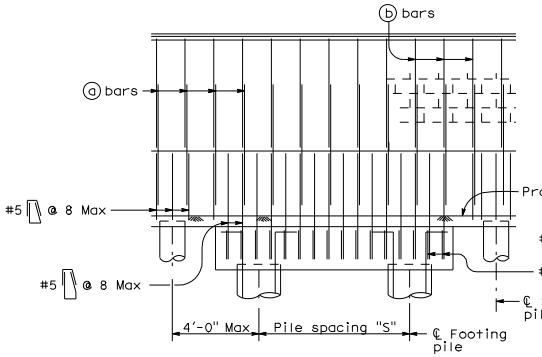

CASE 1

For details not shown, see Case 2.

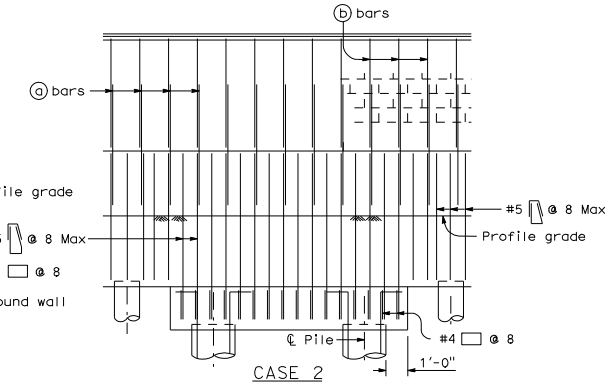

CASE 2

For details not shown, see Case 1.

PART ELEVATIONS

DESIGN NOTES:

DESIGN

Uniform Building Code, 1997 Edition
and the Bridge Design Specifications.

DESIGN WIND LOAD

27 psf

DESIGN SEISMIC LOAD

0.57 Dead load

REINFORCED CONCRETE

f'c = 3.6 ksi
fy = 60 ksi

CONCRETE MASONRY

REGULAR STRENGTH	HIGH STRENGTH	
f'm = 1500 psi	f'm = 2000 psi	f'm = 2500 psi
fb = 495 psi	fb = 660 psi	fb = 830 psi
fs = 24,000 psi	fs = 24,000 psi	fs = 24,000 psi
n = 25.8	n = 19.3	n = 15.5

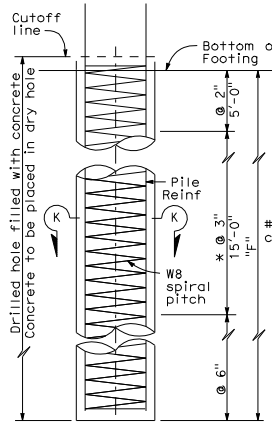

ELEVATION

* @ 2" at option of Contractor.

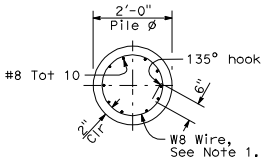

SECTION K-K

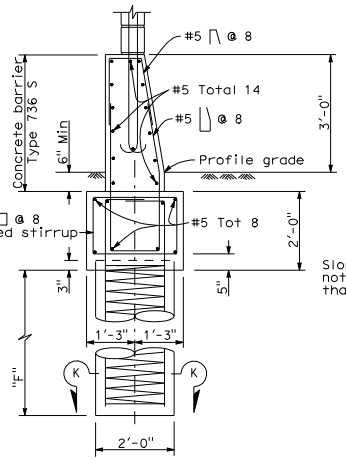

CASE 1

Level ground ±10% on both sides of barrier.
For details not shown, see Case 2.

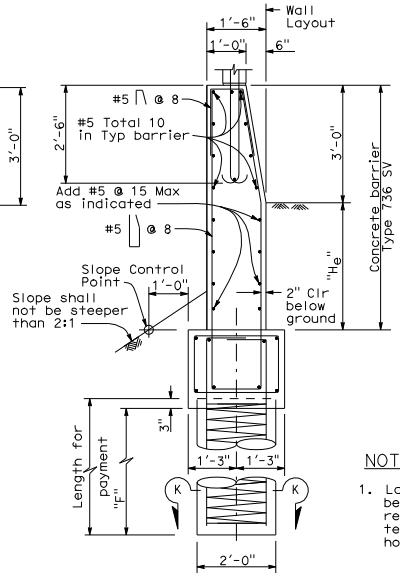

CASE 2

Level ground ±10% at the traffic side of barrier
and sloping ground on the opposite side.
For details now shown, see Case 1.

BARRIER SECTIONS

CASE 1 : PILE DATA TABLE							
Maximum H	ø = 25		ø = 30		ø = 35		Maximum H
	S	L	S	L	S	L	
6'-4"	16'-0"	8'-6"	16'-0"	7'-6"	16'-0"	6'-0"	6'-4"
8'-4"	16'-0"	9'-6"	16'-0"	8'-0"	16'-0"	7'-0"	8'-4"
10'-4"	16'-0"	10'-6"	16'-0"	9'-0"	16'-0"	7'-6"	10'-4"
12'-4"	16'-0"	11'-6"	16'-0"	10'-0"	16'-0"	8'-6"	12'-4"
14'-4"	16'-0"	12'-6"	16'-0"	11'-0"	16'-0"	9'-0"	14'-4"
16'-4"	16'-0"	13'-6"	16'-0"	11'-6"	16'-0"	10'-0"	16'-4"

CASE 2 : PILE DATA TABLE						
H_e	H	ø = 30 Min		ø = 35 Min		H
		S	L	S	L	
1'-0"	6'-4"	16'-0"	15'-6"	16'-0"	12'-0"	6'-4"
	8'-4"	16'-0"	17'-0"	16'-0"	13'-6"	8'-4"
	10'-4"	16'-0"	18'-0"	16'-0"	14'-6"	10'-4"
	12'-4"	16'-0"	19'-6"	16'-0"	15'-6"	12'-4"
	14'-4"	16'-0"	20'-6"	16'-0"	16'-6"	14'-4"
	16'-4"	16'-0"	21'-6"	16'-0"	17'-6"	16'-4"
2'-0"	6'-4"	16'-0"	18'-0"	16'-0"	14'-0"	6'-4"
	8'-4"	16'-0"	19'-0"	16'-0"	15'-0"	8'-4"
	10'-4"	16'-0"	20'-0"	16'-0"	16'-0"	10'-4"
	12'-4"	16'-0"	21'-6"	16'-0"	17'-0"	12'-4"
	14'-4"	16'-0"	22'-6"	16'-0"	18'-0"	14'-4"
	16'-4"	14'-6"	22'-6"	16'-0"	18'-6"	16'-4"
3'-0"	6'-4"	16'-0"	20'-6"	16'-0"	15'-6"	6'-4"
	8'-4"	16'-0"	21'-6"	16'-0"	16'-6"	8'-4"
	10'-4"	15'-6"	22'-0"	16'-0"	17'-6"	10'-4"
	12'-4"	14'-0"	22'-0"	16'-0"	18'-6"	12'-4"
	14'-4"	13'-0"	22'-6"	15'-6"	19'-0"	14'-4"
	16'-4"	12'-0"	22'-6"	14'-0"	19'-0"	16'-4"
4'-0"	6'-4"	13'-0"	21'-0"	16'-0"	17'-6"	6'-4"
	8'-4"	12'-3"	21'-6"	15'-3"	18'-0"	8'-4"
	10'-4"	11'-6"	21'-6"	14'-3"	18'-6"	10'-4"
	12'-4"	10'-9"	22'-0"	13'-3"	18'-6"	12'-4"
	14'-4"	10'-0"	22'-0"	12'-3"	18'-6"	14'-4"
	16'-4"	9'-6"	22'-6"	11'-3"	19'-0"	16'-4"

NOTE:

1. Lapped splices in Spiral reinforcement shall be lapped at least 80 wire diameters. Spiral reinforcement at splices and at ends shall be terminated with a 135° hook with a 6" tail hooked around a logitudinal bar.

STATE OF CALIFORNIA
DEPARTMENT OF TRANSPORTATION

SOUND WALL MASONRY BLOCK ON TYPE 736S/SV BARRIER ON PILE FOOTING FOR SPANNING UTILITIES

NO SCALE

B15-15

2-14-06

2006 STANDARD PLAN B15-15