| DIST | COUNTY | ROUTE | POST MILES TOTAL PROJECT | SHEET NO. | TOTAL SHEETS |
|---|---|---|---|---|---|
| | | | | | |

REGISTERED/CIVIL ENGINEER

May 1, 2006
PLANS APPROVAL DATE

REGISTERED PROFESSIONAL ENGINEER Douglas J. Dunrud No. C47240 Exp. 12-31-07 CIVIL STATE OF CALIFORNIA

*The State of California or its officers or agents shall not be responsible for the accuracy or completeness of electronic copies of this plan sheet.*

*To get to the Caltrans web site, go to: http://www.dot.ca.gov*

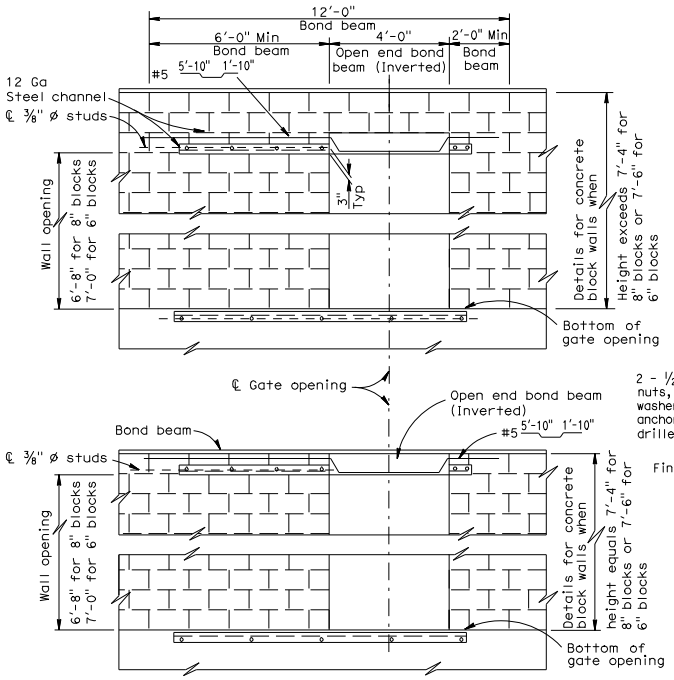


PART ELEVATION (BACK)

For details not shown, see above.

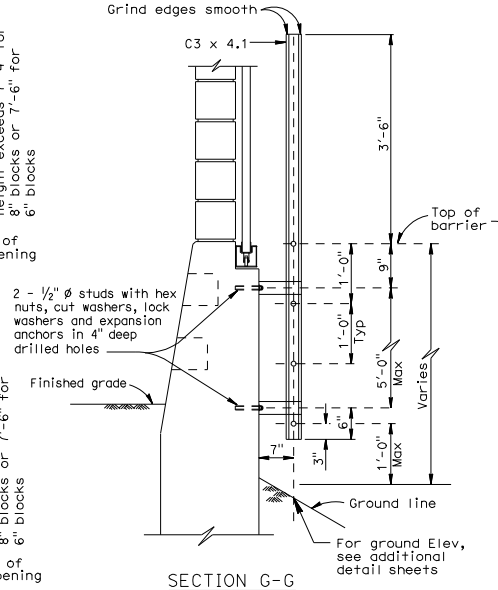


SECTION G-G

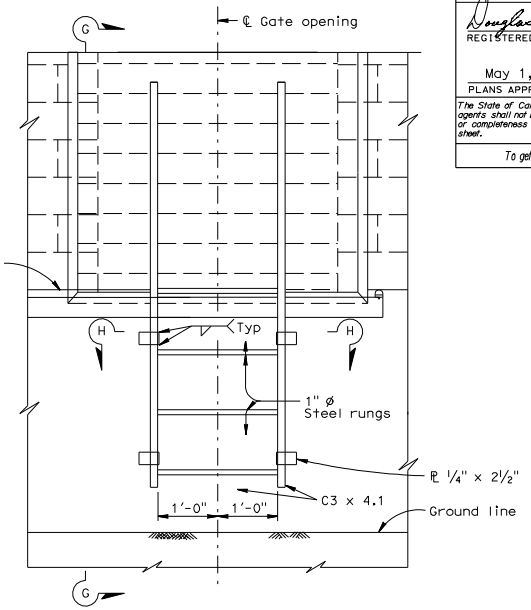


ELEVATION (BACK)

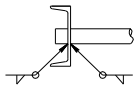

DETAIL "A"

NOTE:

C.S.P. landing required when slope of ground behind barrier is steeper than 8:1. See additional detail sheets for location where required

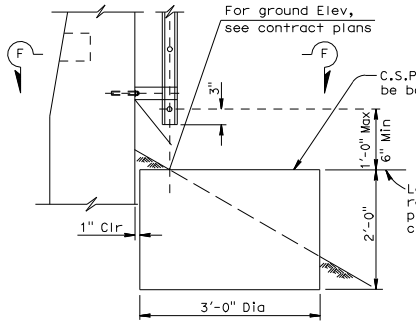


CORRUGATED STEEL PIPE LANDING DETAILS

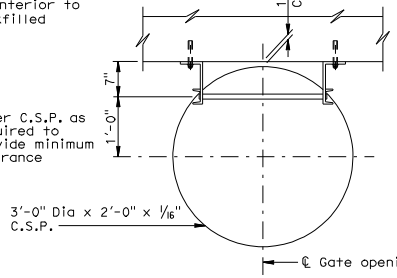


SECTION F-F

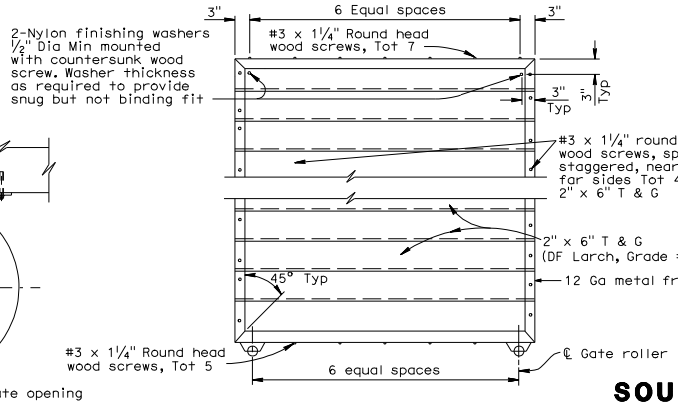


ELEVATION - METAL FRAME

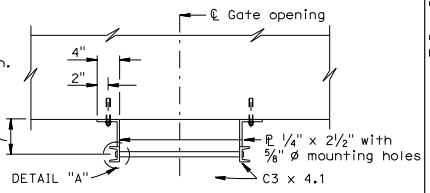


SECTION H-H

STATE OF CALIFORNIA
DEPARTMENT OF TRANSPORTATION

# SOUND WALL MASONRY BLOCK ON BARRIER 5'-0" ACCESS GATE DETAILS (2)

NO SCALE

B15-13

3-6-06