DIST	COUNTY	ROUTE	POST MILES TOTAL PROJECT	SHEET NO.	TOTAL SHEETS

REGISTERED CIVIL ENGINEER

May 1, 2006

PLANS APPROVAL DATE

REGISTERED PROFESSIONAL ENGINEER Tiliat Satter No. C42892 Exp. 03-31-08 CIVIL STATE OF CALIFORNIA

The State of California or its officers or agents shall not be responsible for the accuracy or completeness of electronic copies of this plan sheet.

To get to the Caltrans web site, go to: http://www.dot.ca.gov

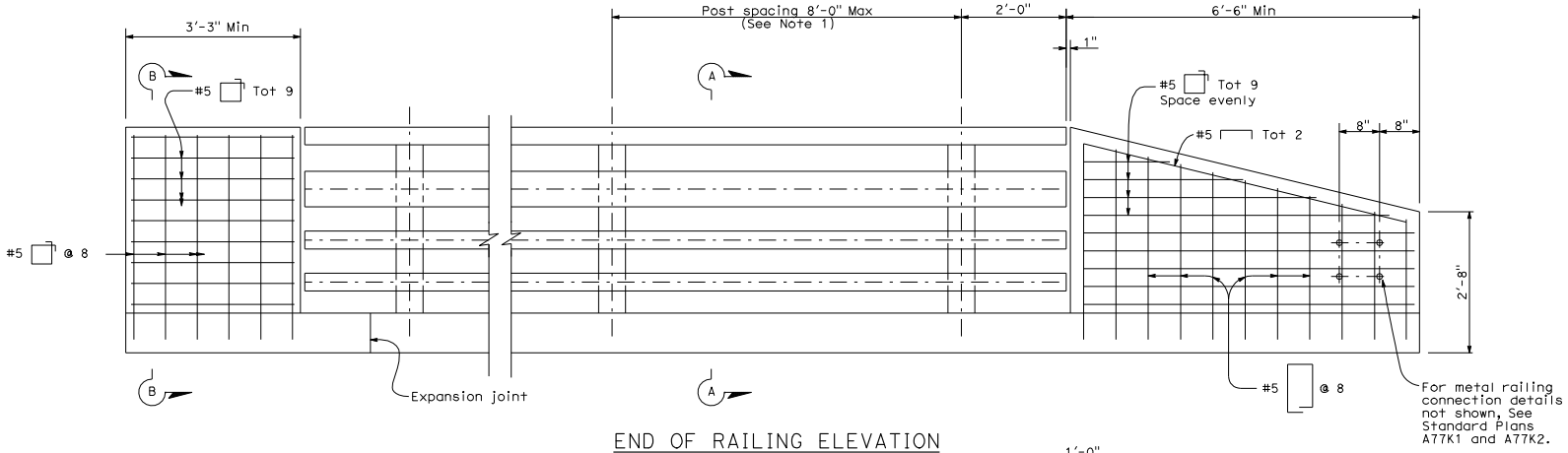

END OF RAILING ELEVATION

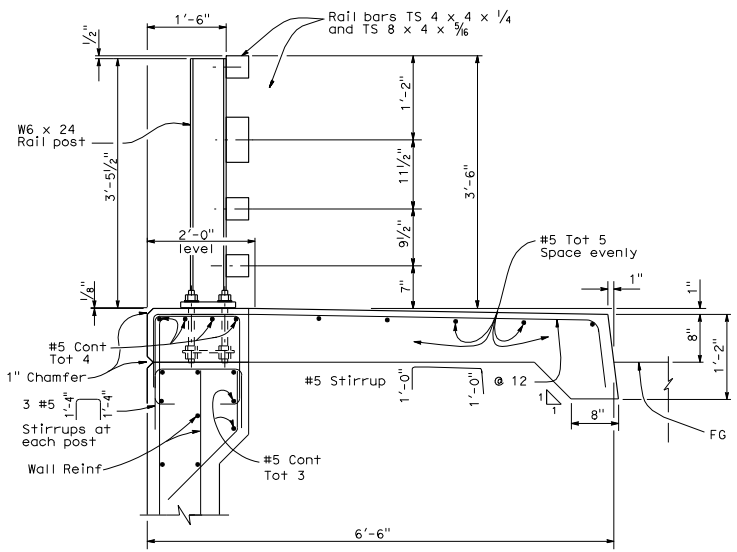

SECTION A-A

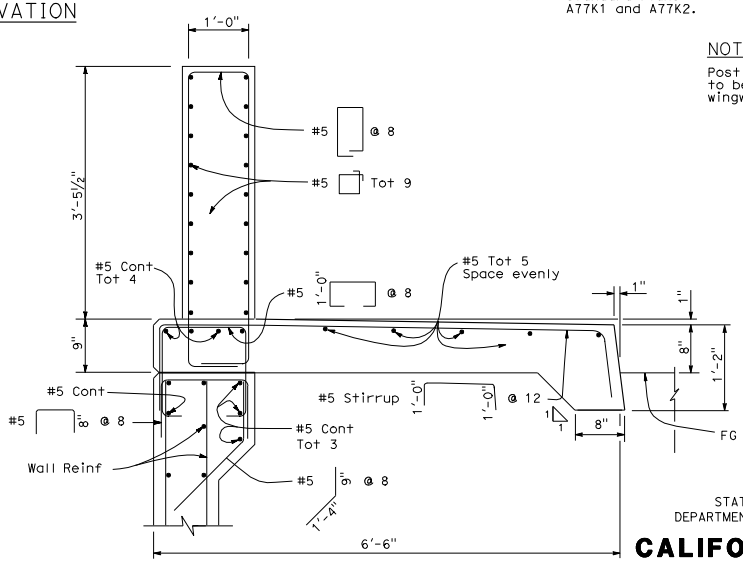

SECTION B-B

NOTE:

Post spacing and/or end block length to be adjusted to fit bridge length or wingwall length.

STATE OF CALIFORNIA
DEPARTMENT OF TRANSPORTATION

CALIFORNIA ST-40 BRIDGE RAIL (SHEET 2 OF 2)

NO SCALE

B11-67

2006 STANDARD PLAN B11-67

1-12-06