To accompany plans dated _____

Caltrans Metric

DIST	COUNTY	ROUTE	KILOMETER POST TOTAL PROJECT	SHEET NO.	TOTAL SHEETS

REGISTERED CIVIL ENGINEER

December 30, 2004
PLANS APPROVAL DATE

REGISTERED PROFESSIONAL ENGINEER Tillat Sattar No. C42892 Exp. 3-31-06 CIVIL STATE OF CALIFORNIA

The State of California or its officers or agents shall not be responsible for the accuracy or completeness of electronic copies of this plan sheet.

To get to the Caltrans web site, go to: http://www.dot.ca.gov

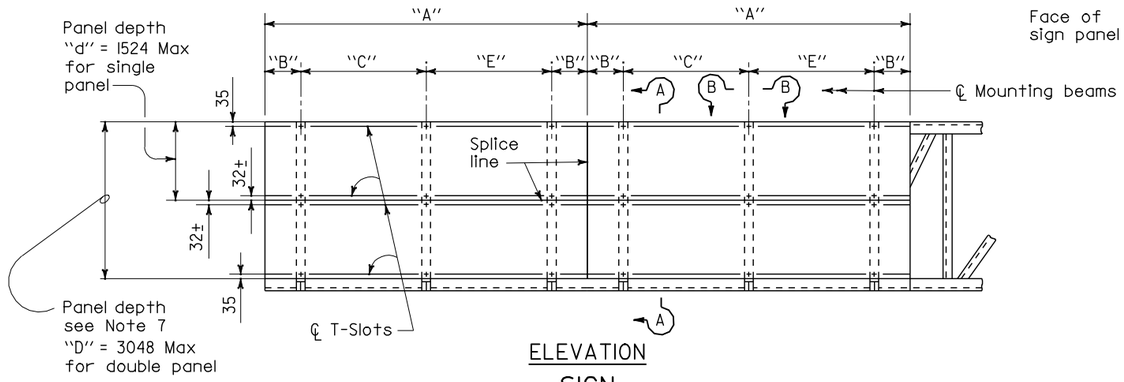

ELEVATION
SIGN

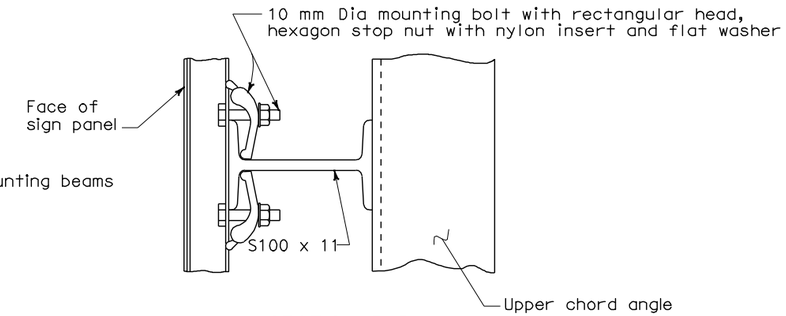

SECTION B-B

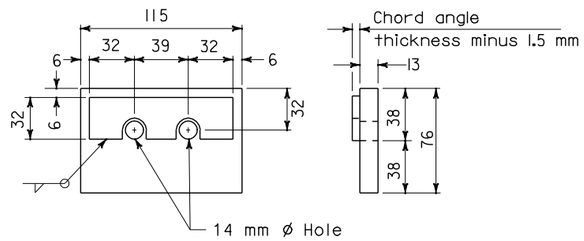

CHORD ANGLE CLAMP

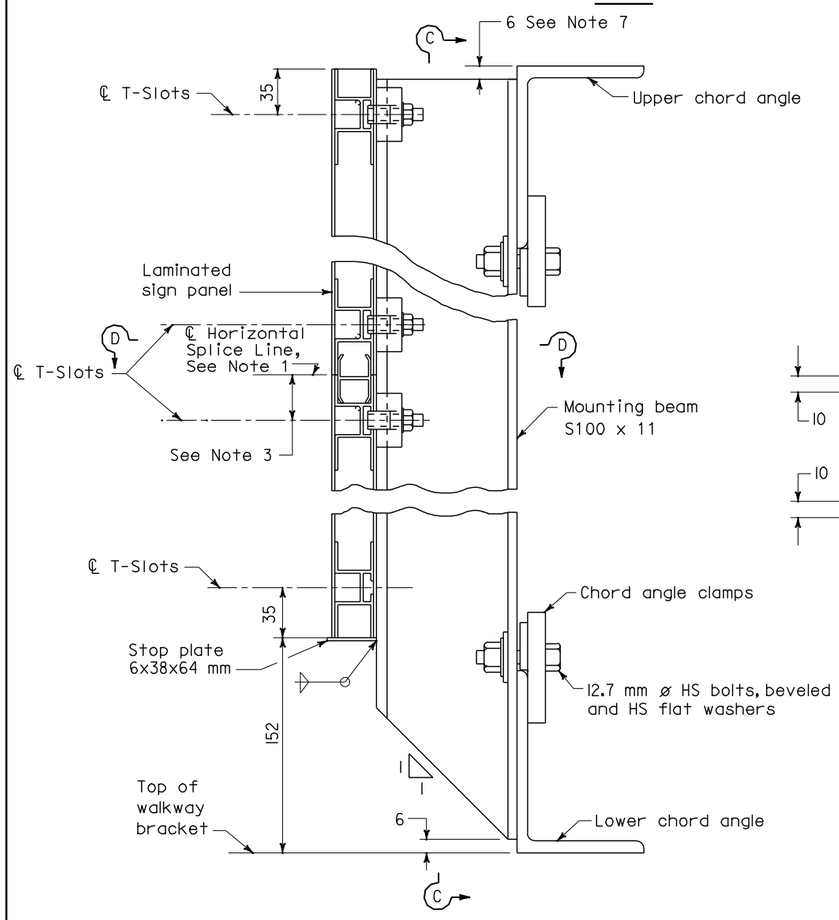

SECTION A-A

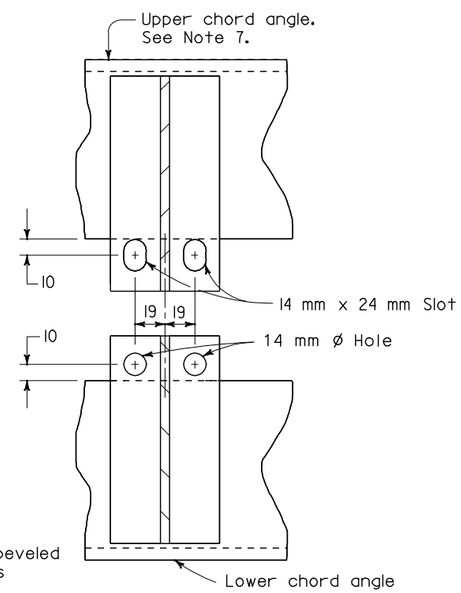

SECTION C-C

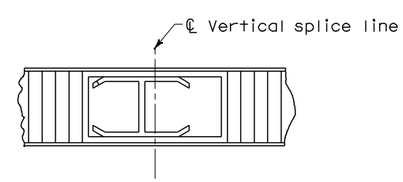

SECTION D-D

MOUNTING BEAM SPACING TABLE

SIGN PANEL LENGTH * (m) "A"	NUMBER MOUNTING BEAMS	SIGN PANEL OVERHANG (mm) "B"	MOUNTING BEAM SPACING (m) "C"	(m) "E"
1.52	2	229	1.02	
1.83	2	305	1.22	
2.13	2	381	1.37	
2.44	2	458	1.52	
2.74	2	559	1.63	
3.05	2	610	1.83	
3.35	2	610	2.13	
3.66	2	762	2.13	
3.96	2	762	2.44	
4.27	2	762	2.74	
4.57	2	915	2.74	
4.88	3	153	2.29	2.29
5.18	3	305	2.29	2.29
5.49	3	305	2.44	2.44
5.79	3	305	2.59	2.59
6.10	3	458	2.59	2.59
6.40	3	458	2.74	2.74
6.71	3	610	2.74	2.74
7.01	3	762	2.74	2.74
7.32	3	915	2.74	2.74

* Signs longer than 7.32 meters are fabricated and mounted as adjoining single panels. The location of the vertical splice line will be determined by the Engineer.

NOTES

1. The location of the horizontal splice line is dependent on the sign panel manufacturer for signs greater than 1524 mm in depth.
2. Mounting bolts and clamps are required on each side of the horizontal splice lines at each support beam.
3. Dimension varies from panel to panel. Average value approximate 32 mm.
4. Torque stainless steel sign panel mounting bolts to 12 Nm.
5. Chord angle clamp to be galvanized after fabrication.
6. The Contractor shall verify all dependent dimensions in the field before ordering or fabricating any material.
7. 2794 mm and 3048 mm sign panel along with the mounting beams will project above the top chord truss member 254 mm and 508 mm respectively. Attachment details shall be the same.

STATE OF CALIFORNIA
DEPARTMENT OF TRANSPORTATION

OVERHEAD SIGNS-TRUSS SIGN MOUNTING DETAILS LAMINATED PANEL-TYPE A

NO SCALE

ALL DIMENSIONS ARE IN MILLIMETERS UNLESS OTHERWISE SHOWN

RSP S8C DATED DECEMBER 30, 2004 SUPERSEDES
RSP S8C DATED OCTOBER 26, 2000 AND STANDARD PLAN S8C
DATED JULY 1, 1999-PAGE 227 OF THE STANDARD PLANS BOOK DATED JULY 1999.

REVISED STANDARD PLAN RSP S8C

1999 REVISED Std PLAN RSP S8C

1-03-05