DIST	COUNTY	ROUTE	KILOMETER POST TOTAL PROJECT	SHEET NO.	TOTAL SHEETS

REGISTERED CIVIL ENGINEER

December 30, 2004
PLANS APPROVAL DATE

REGISTERED PROFESSIONAL ENGINEER NAHED ABDIN No. C48719 Exp. 9-30-06 CIVIL STATE OF CALIFORNIA

The State of California or its officers or agents shall not be responsible for the accuracy or completeness of electronic copies of this plan sheet.

To get to the Caltrans web site, go to: http://www.dot.ca.gov

Caltrans Metric

To accompany plans dated _____

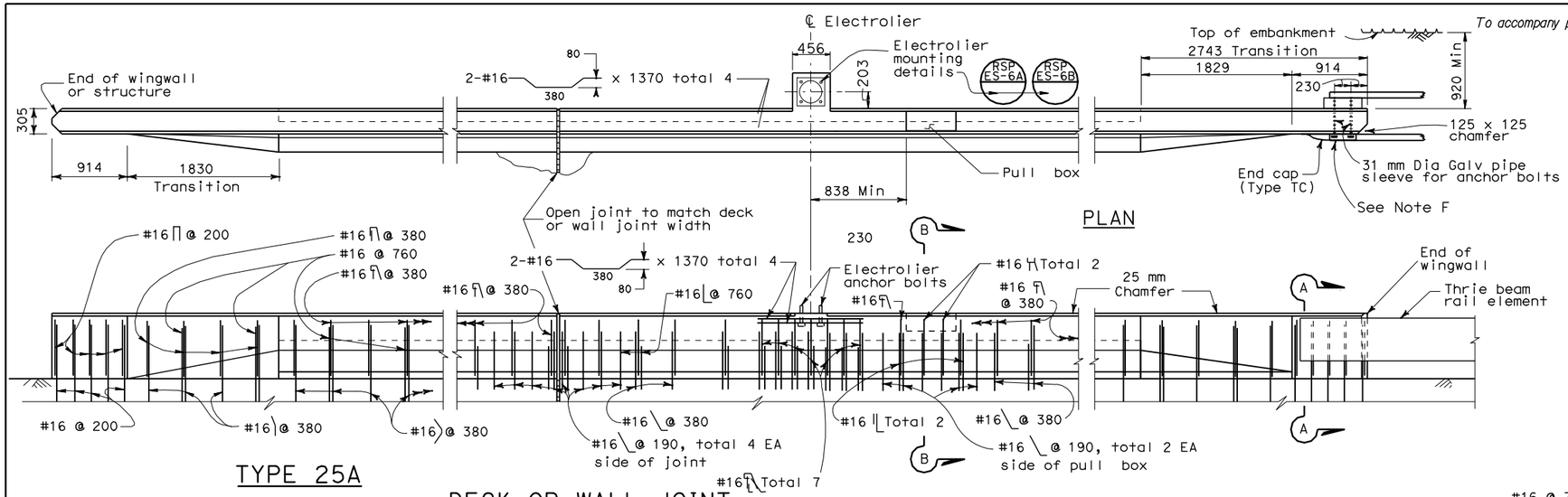

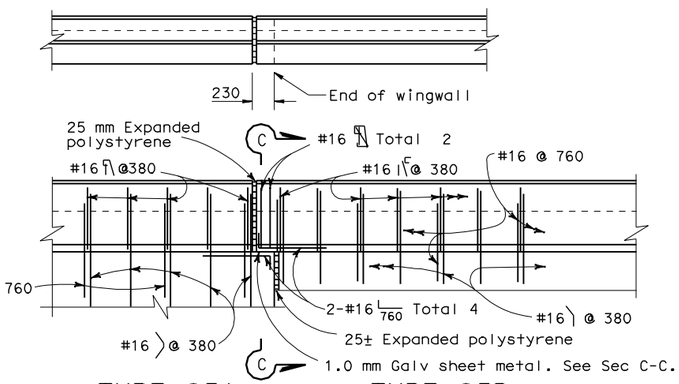

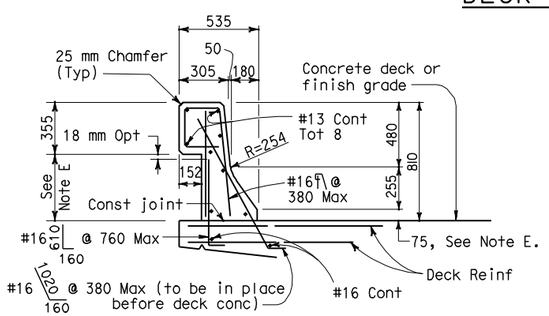

TYPE 25

Concrete: 0.24 m^3 per lineal meter
Reinforcing: 24.2 kg per lineal meter

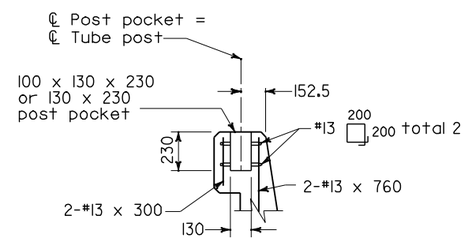

POST ANCHORAGE DETAIL

See Chain Link Railing or Tubular Hand Railing Standard Plans for further details.

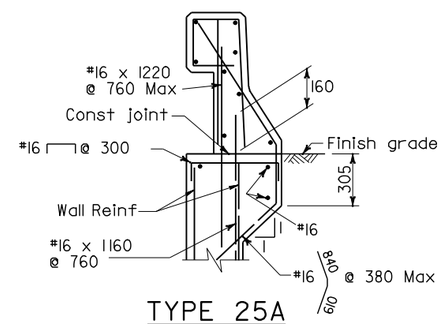

TYPE 25A

Concrete: 0.24 m^3 per lineal meter
Reinforcing: 37.9 kg per lineal meter

Type 25A and 25B details are similar to Type 25 except as noted

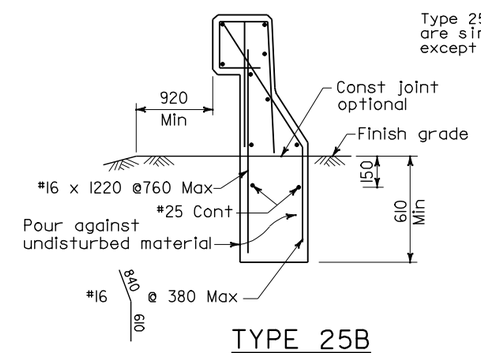

TYPE 25B

Concrete: 0.48 m^3 per lineal meter
Reinforcing: 33.9 kg per lineal meter

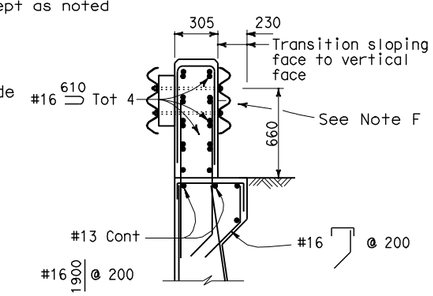

SECTION A-A

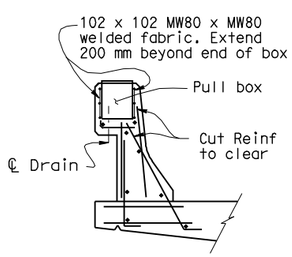

SECTION B-B

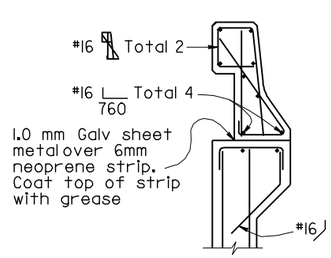

SECTION C-C

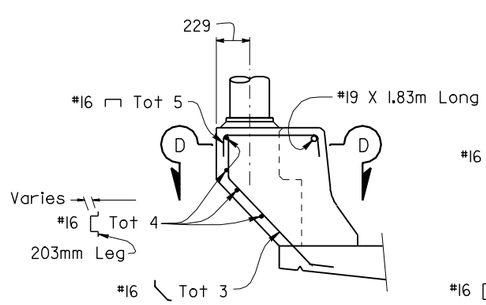

SIDE VIEW

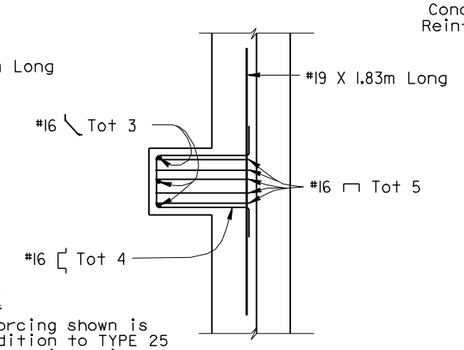

SECTION D-D

PEDESTAL

NOTE

Reinforcing shown is in addition to TYPE 25 Barrier reinforcing.

NOTES

A. Walls are to be backfilled before barrier is placed.

B. Clearance to reinforcing steel in barrier to be 25 mm, except as noted. Longitudinal reinforcement to stop at all expansion joints.

C. See Project Plans for electrolier locations and pull box type.

D. For electrical details, see Standard Plans ES-9A, 9B, 9C, 9D, and 9E.

E. Dimensions may vary with cross slope and with certain thickness of surfacing. See Project Plans.

F. For typical transition railing connection details not shown, see New Standard Plan NSP A77P.

STATE OF CALIFORNIA
DEPARTMENT OF TRANSPORTATION

CONCRETE BARRIER TYPE 25

NO SCALE

ALL DIMENSIONS ARE IN MILLIMETERS UNLESS OTHERWISE SHOWN

RSP B11-53 DATED DECEMBER 30, 2004 SUPERSEDES RSP B11-53 DATED OCTOBER 26, 2000 AND STANDARD PLAN B11-53 DATED JULY 1, 1999-PAGE 206 OF THE STANDARD PLANS BOOK DATED JULY 1999.

REVISED STANDARD PLAN RSP B11-53

1999 REVISED Std PLAN RSP B11-53

1-03-05