DIST	COUNTY	ROUTE	KILOMETER POST TOTAL PROJECT	SHEET No	TOTAL SHEETS

REGISTERED CIVIL ENGINEER

December 30, 2004
PLANS APPROVAL DATE

REGISTERED PROFESSIONAL ENGINEER Tillat Sattar No. C42892 Exp. 3-31-06 CIVIL STATE OF CALIFORNIA

The State of California or its officers or agents shall not be responsible for the accuracy or completeness of electronic copies of this plan sheet.

To get to the Caltrans web site, go to: http://www.dot.ca.gov

Caltrans Metric

To accompany plans dated _____

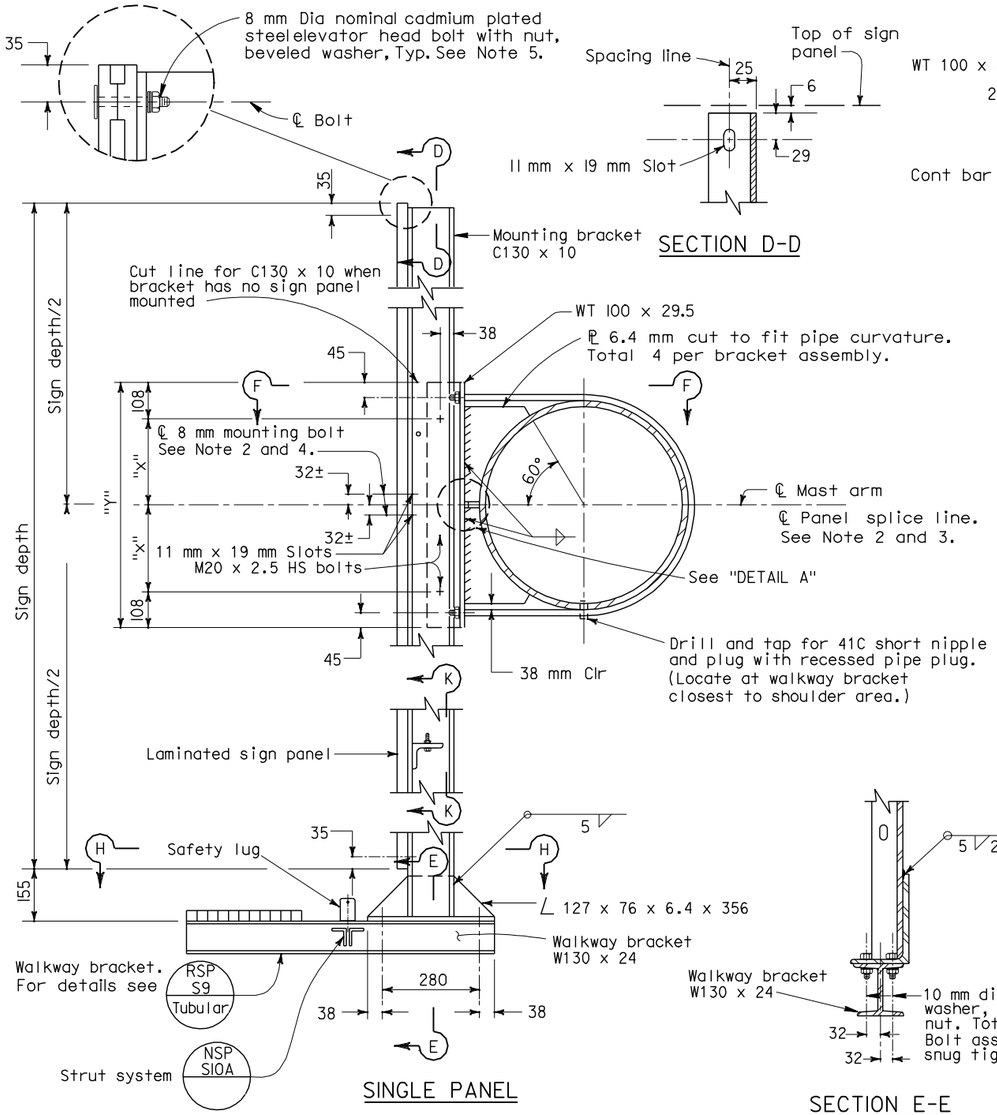

SINGLE PANEL

SECTION D-D

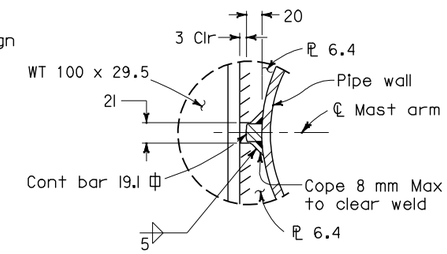

DETAIL A

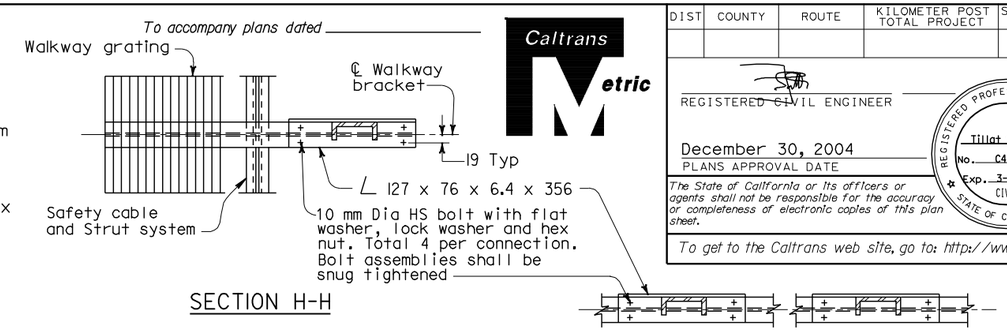

SECTION H-H

SECTION J-J

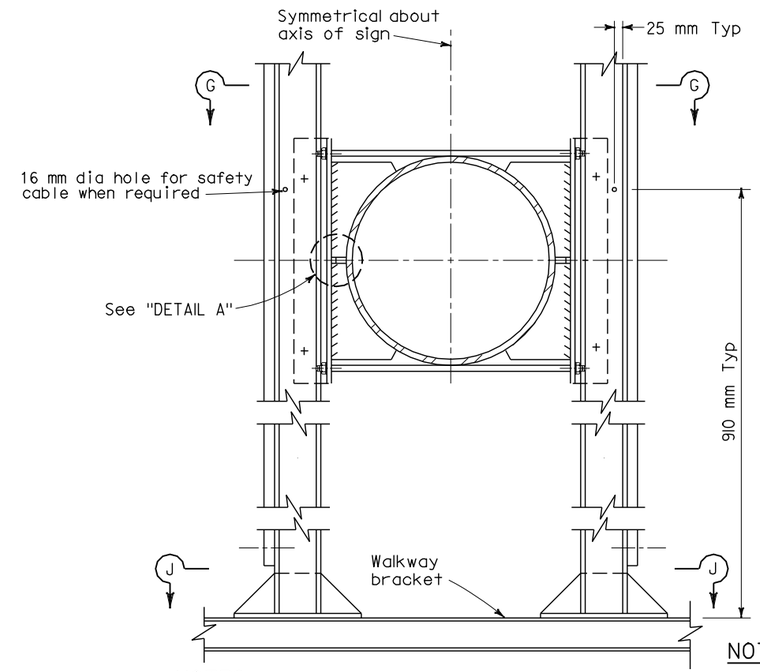

NOTES

For details not shown or noted see "SINGLE PANEL". Assembly details shown apply to tangent portion of pipe only. For mounting bracket on elbow see "DETAIL B".

DOUBLE PANEL

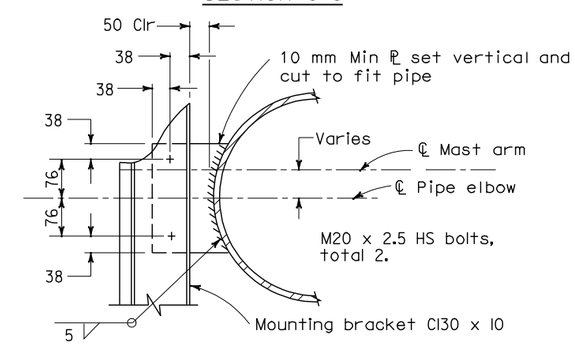

DETAIL B

Mounting bracket on elbow

Pipe Size NPS \ Distance	"X" (mm)	"Y" (mm)
20	200	616
24	251	718
30	327	870

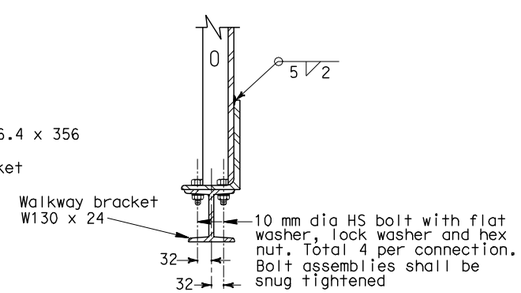

SECTION E-E

MOUNTING BRACKET ASSEMBLY DETAILS

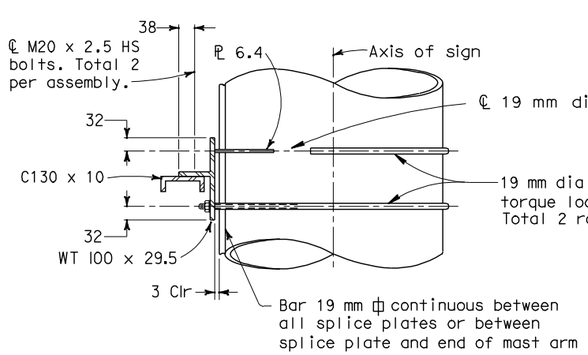

SECTION F-F

NPS = Nominal Pipe Size

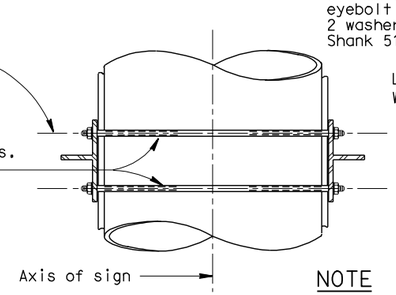

SECTION G-G

NOTE

For details not shown or noted see "SECTION F-F".

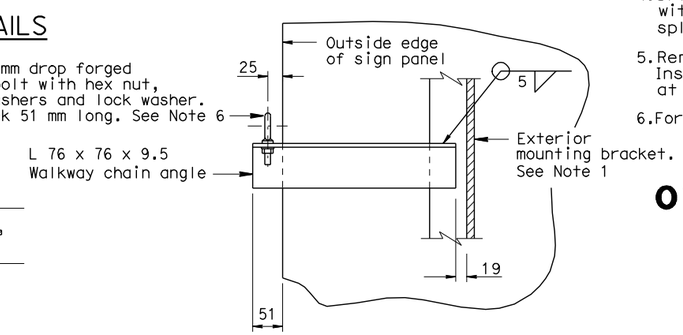

SECTION K-K

NOTES

1. The exterior mounting brackets to face outward to accommodate the walkway chain angle.
2. Splice line not necessarily ℄ mast arm. Exact location is dependent on sign panel manufacturer.
3. Install aluminum "H" Section closure extrusions at vertical and horizontal sign panel splice lines.
4. Drill through panel at integral track. Install elevator bolt with interstate green finish on head. Typical at panel splice.
5. Remove reflector. Drill through panel at integral track. Install elevator head bolt and attach reflector. Typical at border.
6. For walkway chain details, see Revised Standard Plan RSP S11.

STATE OF CALIFORNIA
DEPARTMENT OF TRANSPORTATION

OVERHEAD SIGNS-TUBULAR STRUCTURAL FRAME DETAILS No. 1

NO SCALE

ALL DIMENSIONS ARE IN MILLIMETERS UNLESS OTHERWISE SHOWN

NSP S33 DATED DECEMBER 30, 2004 SUPERSEDES STANDARD PLAN S40R DATED JULY 1, 1999-PAGE 259 OF THE STANDARD PLANS BOOK DATED JULY 1999.

NEW STANDARD PLAN NSP S33

1999 NEW Std PLAN NSP S33

241D

1-03-05