To accompany plans dated _____

Caltrans Metric

DIST	COUNTY	ROUTE	KILOMETER POST TOTAL PROJECT	SHEET NO.	TOTAL SHEETS

REGISTERED CIVIL ENGINEER

December 30, 2004
PLANS APPROVAL DATE

REGISTERED PROFESSIONAL ENGINEER — Tillat Sattar — No. C42892 — Exp. 3-31-06 — CIVIL — STATE OF CALIFORNIA

The State of California or its officers or agents shall not be responsible for the accuracy or completeness of electronic copies of this plan sheet.

To get to the Caltrans web site, go to: http://www.dot.ca.gov

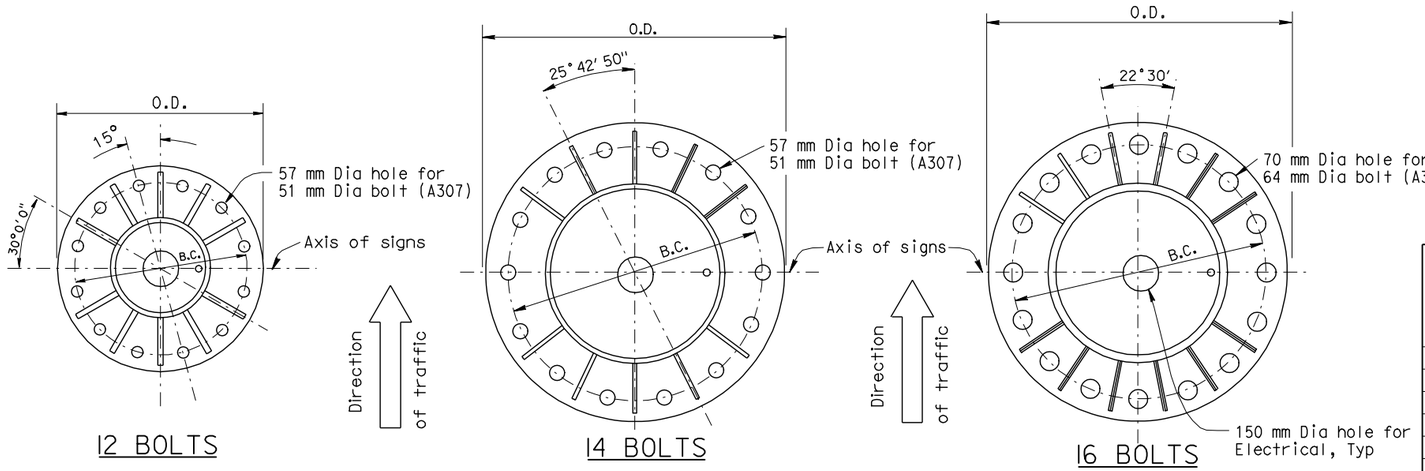

SINGLE POST TYPE BASE PLATE DETAILS

Post Type No.	Nominal Pipe Size (NPS)	Pipe Thickness (mm)	Base PL OD & Thickness (mm)	Anchor: Bolt Circle (mm)	Anchor: Bolts Total & Dia (mm)	CIDH: Pile Dia (mm)	CIDH: Pile Depth (m)	CIDH Vertical Reinforcing: Total	CIDH Vertical Reinforcing: Bar Size	CIDH Vertical Reinforcing: Bar Circle (mm)	CIDH Spiral: Bar Size	CIDH Spiral: Pitch (mm)
II	14	12.7	864 x 51	610	12-51	1372	4.5	26	32	1143	16	89
III	16	12.7	864 x 51	610	12-51	1372	4.9	26	32	1143	16	89
IV	18	12.7	864 x 51	610	12-51	1372	5.5	26	32	1143	16	89
V	20	12.7	1016 x 64	864	14-51	1372	5.8	26	32	1143	16	89
VI	24	12.7	1016 x 64	864	16-64	1524	6.7	28	36	1295	16	89
VII	24	19.0	1016 x 64	864	16-64	1524	7.0	28	36	1295	16	89
VIII	24	24.6	1016 x 89	864	16-64	1524	7.6	28	36	1295	16	89
IX	24	24.6	1016 x 89	864	16-64	1524	7.6	28	36	1295	16	89

SINGLE POST TABLE

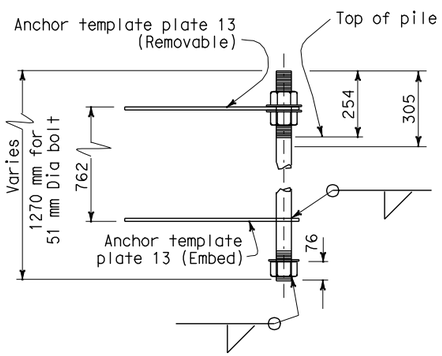

FOR POST II THRU IV
12 BOLTS PATTERN

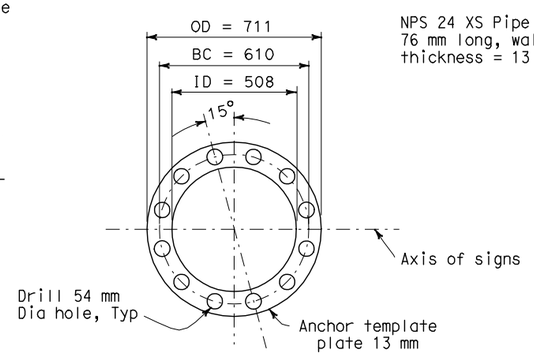

12 BOLTS

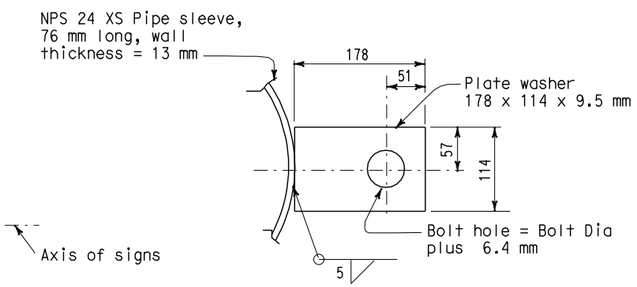

PLATE WASHER FOR
14 & 16 BOLT PATTERN

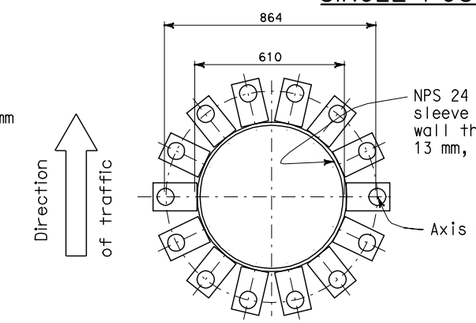

14 BOLTS

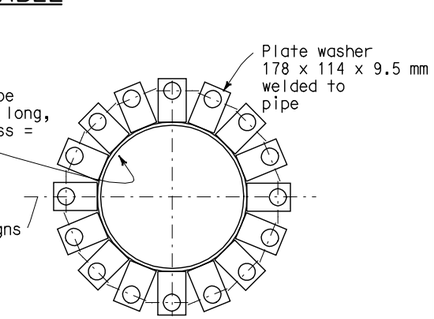

16 BOLTS

ANCHOR BOLT TEMPLATE

Template to match base plate anchor bolt layouts

(Option: Permanent template similar to ring plate type can be used in lieu of plate washer type).

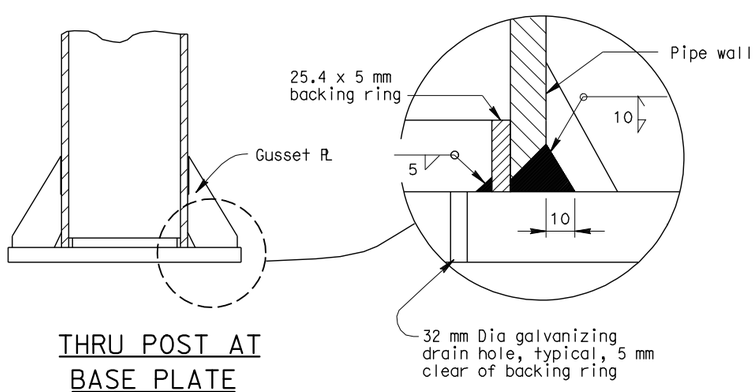

THRU POST AT
BASE PLATE

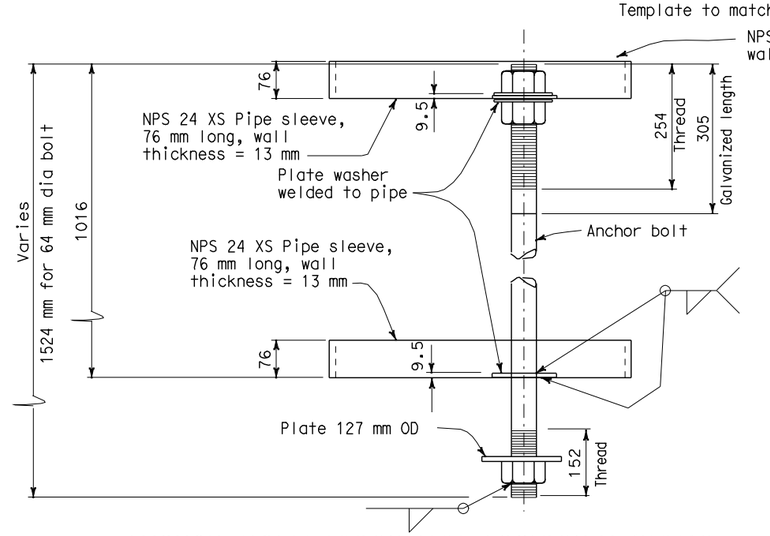

ANCHOR BOLT TEMPLATE ASSEMBLY DETAIL

Note: One bolt shown only. Other bolts not shown.

STATE OF CALIFORNIA
DEPARTMENT OF TRANSPORTATION

OVERHEAD SIGNS-TRUSS SINGLE POST TYPE BASE PLATE AND ANCHORAGE DETAILS

NO SCALE

ALL DIMENSIONS ARE IN
MILLIMETERS UNLESS OTHERWISE SHOWN

NSP S2B AND NSP S2A DATED DECEMBER 30, 2004
SUPERSEDE RSP S2 DATED OCTOBER 26, 2000 AND STANDARD PLAN S2
DATED JULY 1, 1999-PAGE 219 OF THE STANDARD PLANS BOOK DATED JULY 1999.

NEW STANDARD PLAN NSP S2B

1999 NEW Std PLAN NSP S2B

219A

1-04-05