DIST	COUNTY	ROUTE	KILOMETER POST TOTAL PROJECT	SHEET NO.	TOTAL SHEETS

Caltrans Metric

Randell D. Hiatt
REGISTERED CIVIL ENGINEER

December 30, 2004
PLANS APPROVAL DATE

REGISTERED PROFESSIONAL ENGINEER — Randell D. Hiatt — No. C50200 — Exp. 6-30-05 — CIVIL — STATE OF CALIFORNIA

The State of California or its officers or agents shall not be responsible for the accuracy or completeness of electronic copies of this plan sheet.

To get to the Caltrans web site, go to: http://www.dot.ca.gov

To accompany plans dated _____

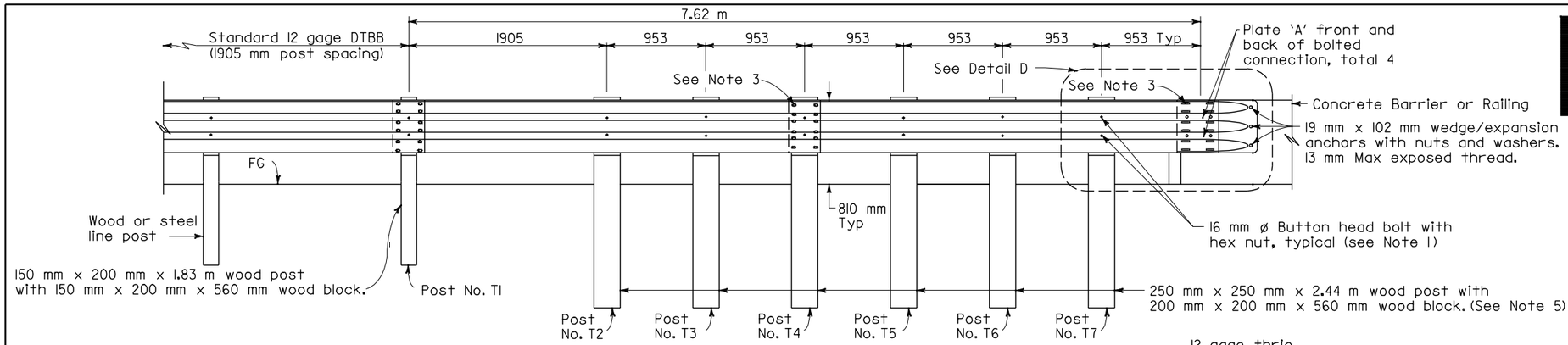

ELEVATION

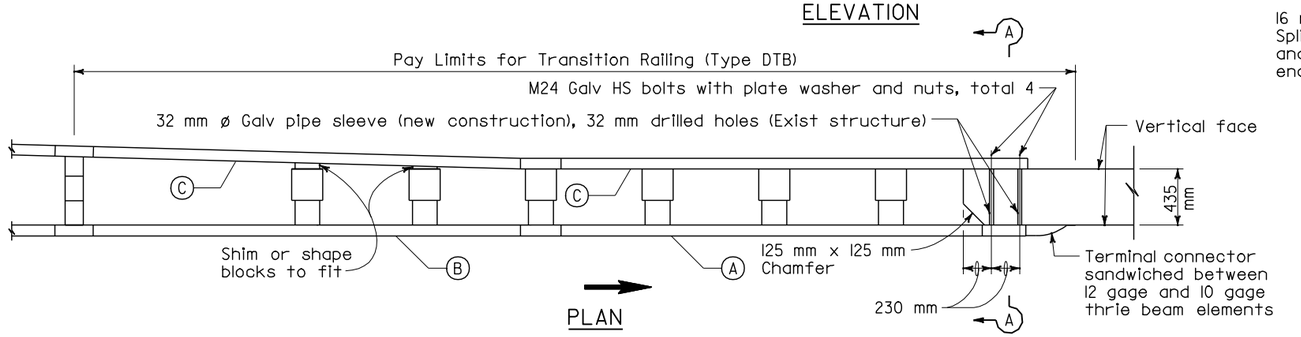

PLAN

TRANSTION RAILING (TYPE DTB)

(No Blockout Attachment)

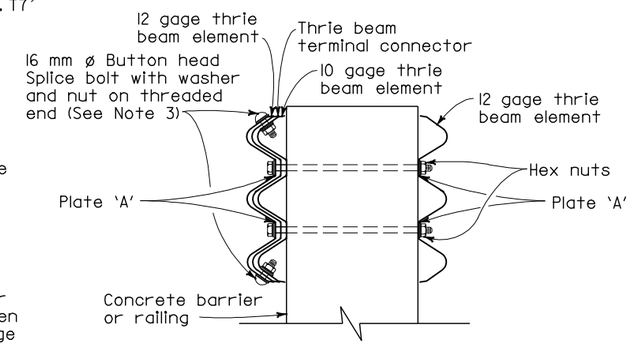

SECTION A-A

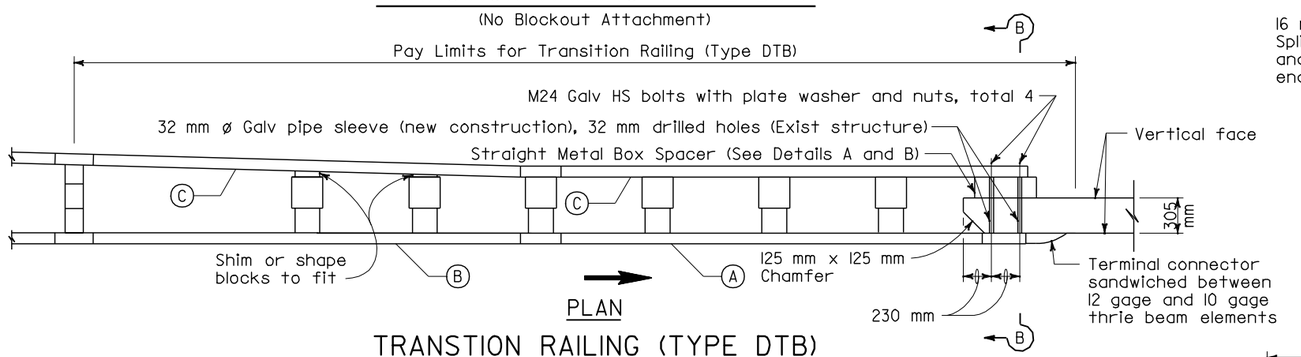

PLAN

TRANSTION RAILING (TYPE DTB)

(Blockout Attachment)

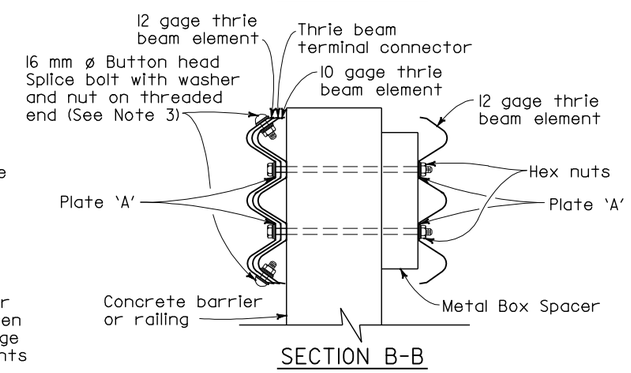

SECTION B-B

NOTES:

1. Use 16 mm ø Button head bolts and hex nuts for connections to posts. No washer on rail face for bolted connections to post.
2. The nested rail elements end cap and single 10 gage thrie beam element, may be spliced together prior to bolting the elements to the wood post and concrete barrier or railing.
3. Exterior splice bolt holes for rail splices at Post No. T4 and the connection to the concrete barrier or railing shall be the standard 23 mm x 29 mm slot size. Interior splice bolt holes at these locations may be increased up to 32 mm ø. Only the top 2 and the bottom 2 splice bolts with washers and nuts are required for rail splices at Post No. T4 and the connection to the concrete barrier or railing.
4. Direction of adjacent traffic indicated by ⟶ .
5. The top elevation of Post Nos. T1 through T7 shall not project more than 25 mm above the top elevation of the rail element.

LEGEND

(A) Nested thrie beam elements (one 12 gage element nested over one 10 gage element).

(B) One 10 gage thrie beam element.

(C) One 12 gage thrie beam element.

10 gage = 3.43 mm thick

12 gage = 2.67 mm thick

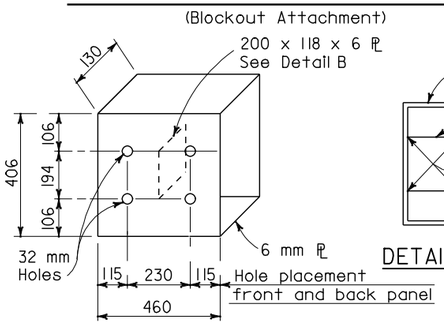

DETAIL A

STRAIGHT METAL BOX SPACER

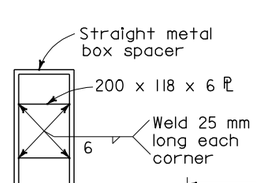

DETAIL B

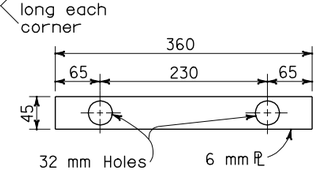

DETAIL C

PLATE 'A'

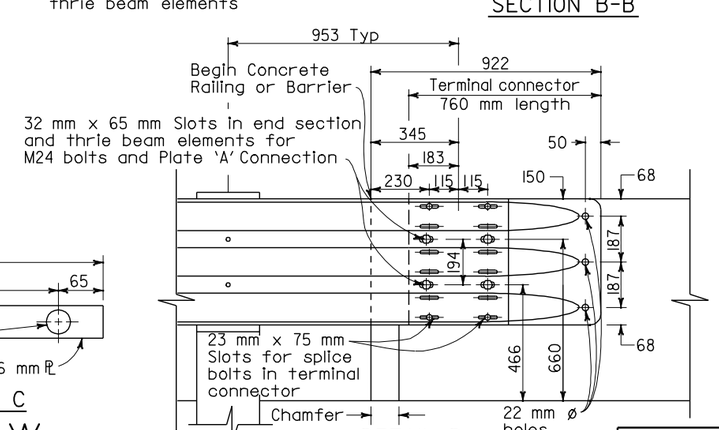

DETAIL D

STATE OF CALIFORNIA
DEPARTMENT OF TRANSPORTATION

THRIE BEAM BARRIER TRANSITION RAILING (TYPE DTB)

NO SCALE

ALL DIMENSIONS ARE IN MILLIMETERS UNLESS OTHERWISE SHOWN

NSP A78K DATED DECEMBER 30, 2004 SUPPLEMENTS THE STANDARD PLANS BOOK DATED JULY 1999.

NEW STANDARD PLAN NSP A78K

1999 NEW Std PLAN NSP A78K

63B

12-31-04