DIST	COUNTY	ROUTE	KILOMETER POST TOTAL PROJECT	SHEET NO.	TOTAL SHEETS

REGISTERED CIVIL ENGINEER

January 24, 2005
PLANS APPROVAL DATE

REGISTERED PROFESSIONAL ENGINEER Tillat Sattar No. C42892 Exp. 03-31-2006 CIVIL STATE OF CALIFORNIA

The State of California or its officers or agents shall not be responsible for the accuracy or completeness of electronic copies of this plan sheet.

To get to the Caltrans web site, go to: http://www.dot.ca.gov

To accompany plans dated _____

Caltrans Metric

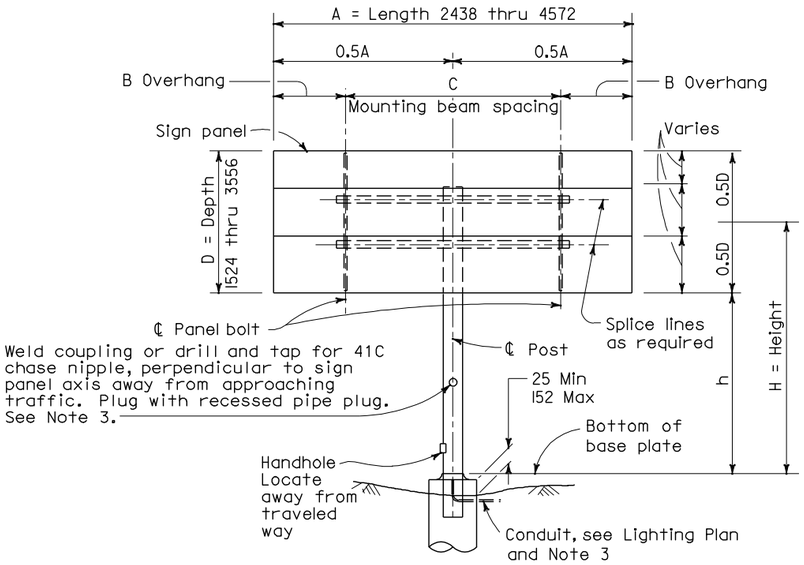

ELEVATION A

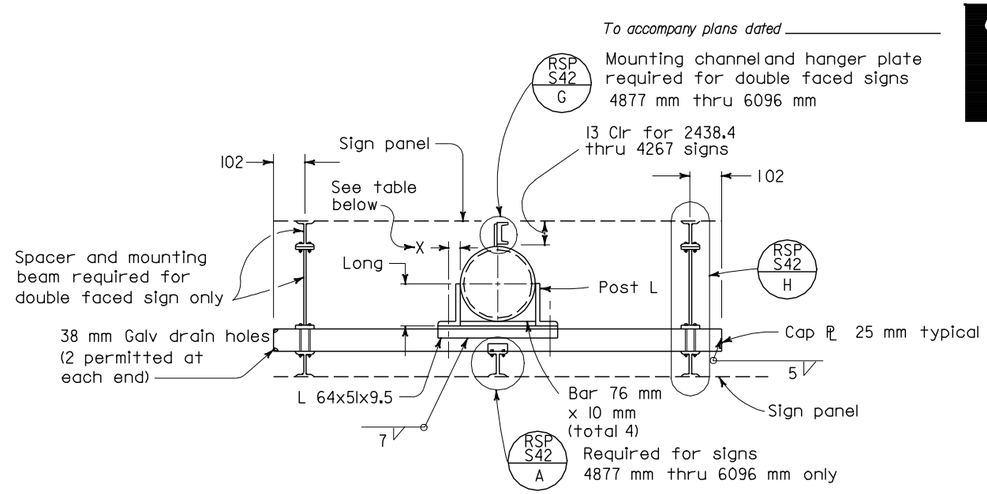

MOUNTING BEAM SPACING

Sign Panel Length	Number Mounting Beams	Sign Panel Overhang	Mounting Beam Spacing	
A		B	C	E
1524	2	229	1066	
1829	2	305	1219	
2134	2	381	1372	
2438	2	457	1524	
2743	2	559	1625	
3048	2	610	1829	
3353	2	610	2134	
3657	2	762	2134	
3962	2	762	2438	
4267	2	762	2743	
4572	2	914.5	2743	
4877	3	152.5	2286	2286
5182	3	305	2286	2286
5486	3	305	2438	2438
5792	3	305	2591	2591
6096	3	457	2591	2591

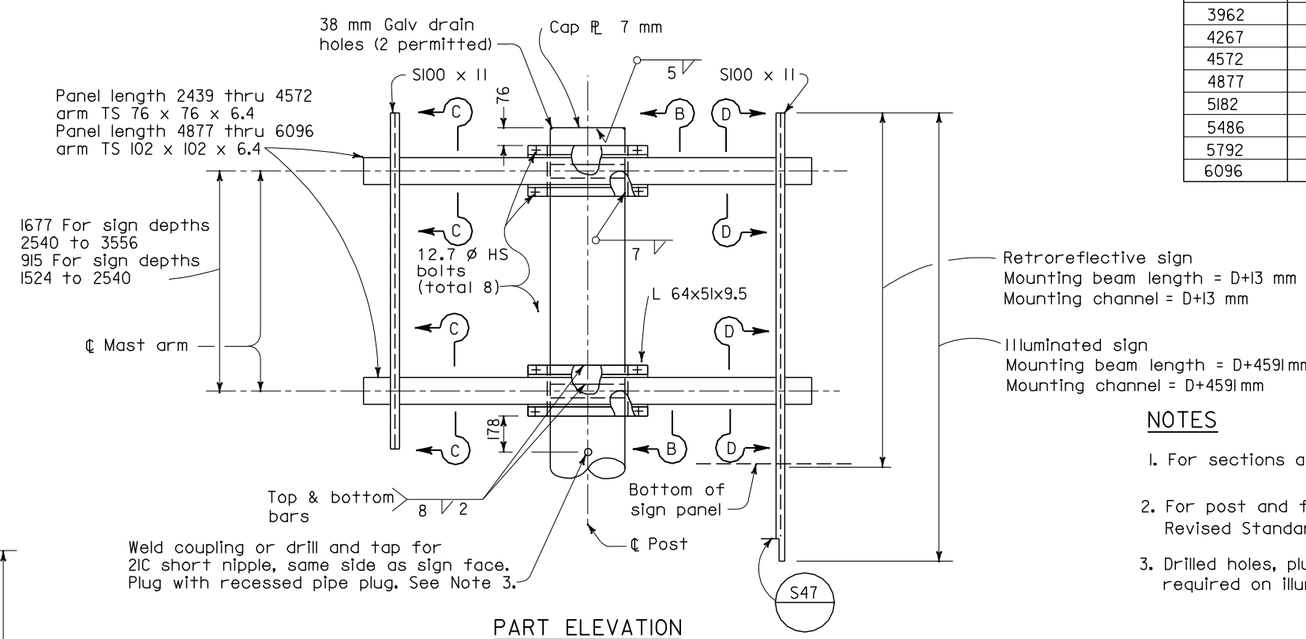

PART ELEVATION

NOTES

1. For sections and detail not shown see RSP S42
2. For post and foundation details see Revised Standard Plans RSP S48 and RSP S49.
3. Drilled holes, plugs, conduit and handhole required on illuminated signs only.

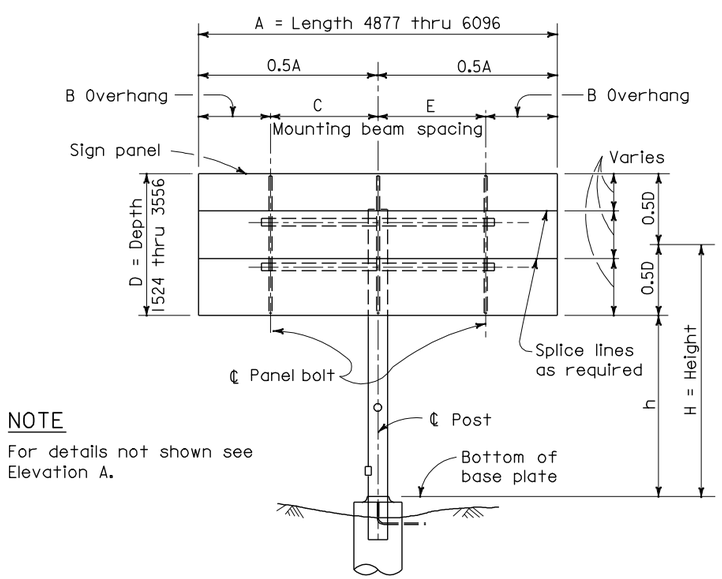

ELEVATION B

NOTE

For details not shown see Elevation A.

Post Size (Pipe)		Post Angles		
NPS	Min "t"	Angle	X (mm)	Weld (mm)
6	7.11	∠ 89x76x12.7	45	7
6	10.97	∠ 89x76x12.7	45	7
8	8.18	∠ 127x76x12.7	45	7
8	12.7	∠ 127x76x12.7	45	7
10	12.7	∠ 152x102x15.9	64	7
12	12.7	∠ 178x102x15.9	64	8
14	12.7	∠ 203x102x19.0	64	8
14	15.88	∠ 203x102x19.0	64	8

STATE OF CALIFORNIA
DEPARTMENT OF TRANSPORTATION

OVERHEAD SIGNS-LIGHTWEIGHT BALANCED-SINGLE STEEL POST CONNECTION AND MOUNTING DETAILS

NO SCALE

ALL DIMENSIONS ARE IN MILLIMETERS UNLESS OTHERWISE SHOWN

RSP S41 DATED JANUARY 24, 2005 SUPERSEDES STANDARD PLAN S41 DATED JULY 1, 2004-PAGE 340 OF THE STANDARD PLANS BOOK DATED JULY 2004.

REVISED STANDARD PLAN RSP S41

2004 REVISED Std PLAN RSP S41

1-24-05