DIST	COUNTY	ROUTE	KILOMETER POST TOTAL PROJECT	SHEET NO.	TOTAL SHEETS

Caltrans Metric

REGISTERED CIVIL ENGINEER

January 24, 2005
PLANS APPROVAL DATE

REGISTERED PROFESSIONAL ENGINEER Tillat Sattar No. C42892 Exp. 03-31-2006 CIVIL STATE OF CALIFORNIA

The State of California or its officers or agents shall not be responsible for the accuracy or completeness of electronic copies of this plan sheet.

To get to the Caltrans web site, go to: http://www.dot.ca.gov

To accompany plans dated _____

Post Type	Nominal Pipe Size (NPS)	Pipe Wall Thickness (mm)	Pipe split (mm)	Base ℞ OD & Thickness (mm)	Anchor		
					Bolt Circle (mm)	Bolts total & Dia (mm)	Length (mm)
I-S	14	12.7	127	864 x 51	711	12-51	1270
II-S	16	12.7	152	864 x 51	711	12-51	1270
III-S	18	12.7	178	940 x 51	787	12-51	1270
IV-S	20	12.7	203	1016 x 51	864	14-51	1270
V-S	24	12.7	203	1118 X 51	965	16-64	1524
VI-S	24	24.6	254	1219 x 64	1041	16-64	1524
VII-S	24	24.6	254	1219 x 64	1041	16-64	1524

TWO POST TABLE

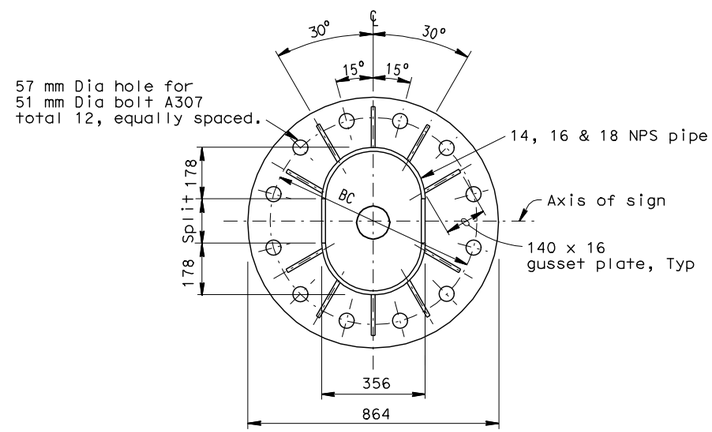

12 BOLTS
Type I-S shown

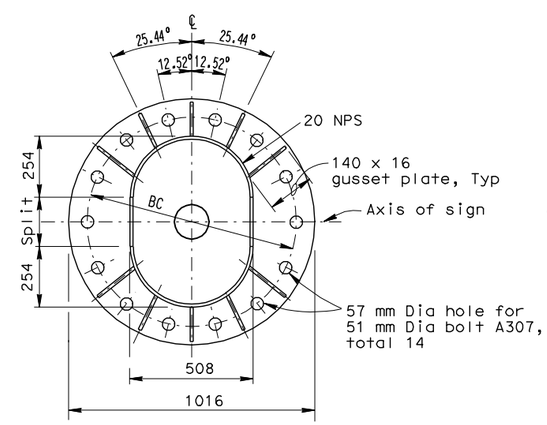

14 BOLTS

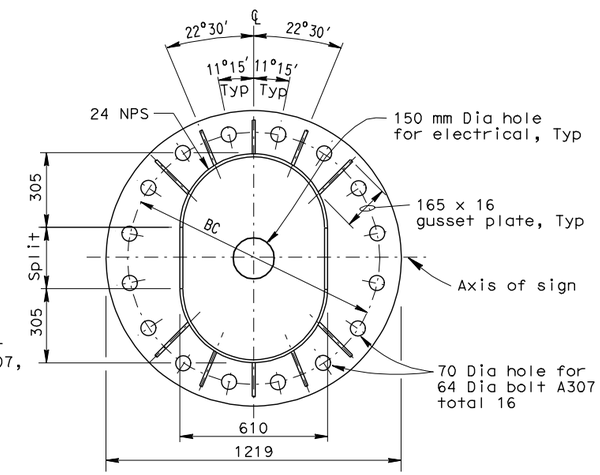

16 BOLTS
Type VI-S shown

TWO POST TYPE BASE PLATE DETAILS

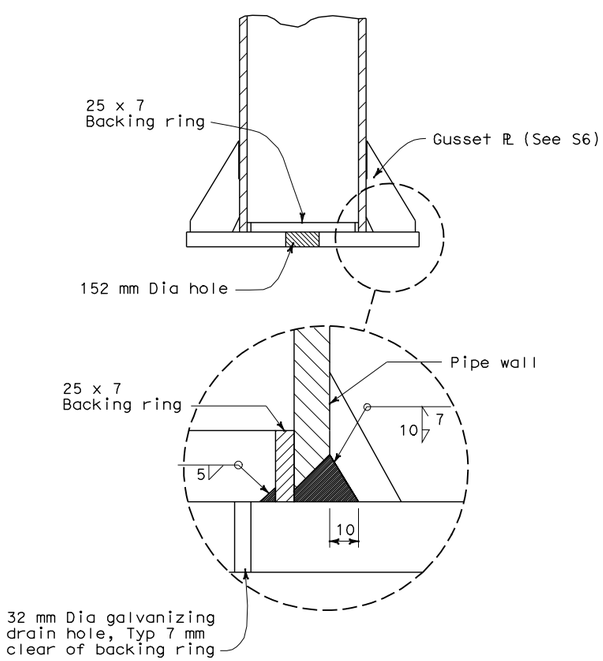

THRU POST AT BASE PLATE

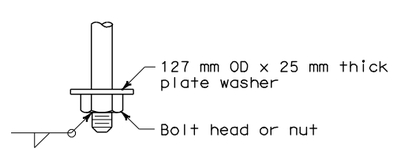

ANCHORAGE DETAIL

STATE OF CALIFORNIA
DEPARTMENT OF TRANSPORTATION

OVERHEAD SIGNS-TRUSS TWO POST TYPE BASE PLATE AND ANCHORAGE DETAILS

NO SCALE

ALL DIMENSIONS ARE IN MILLIMETERS UNLESS OTHERWISE SHOWN

RSP S10 DATED JANUARY 24, 2005 SUPERSEDES STANDARD PLAN S10 DATED JULY 1, 2004-PAGE 319 OF THE STANDARD PLANS BOOK DATED JULY 2004.

REVISED STANDARD PLAN RSP S10

2004 REVISED Std PLAN RSP S10

1-24-05