Post Type	Pole Data				Base Plate Data (mm)					CIDH Pile Data		
	Height "h" (m)	Min OD		Min Thickness	Dia	Thickness	Anchor Bolts			"D" (mm)	"L" (m)	Pile Reinf
		BASE	TOP				Total	Size "d"	BC			
CCTV 90	27.4	610	281	4.55*	914	51	6	51	737	1067	3.6	15 - #22
CCTV 80	24.3	559	256	4.55*	864	51	6	51	686	1067	3.3	15 - #22
CCTV 70	21.3	508	260	4.55	813	51	6	51	635	1067	3.0	15 - #22
CCTV 60	18.2	457	248	4.55	762	51	6	51	584	1067	2.7	15 - #22

* Lower pole segment thickness, see Pole Details

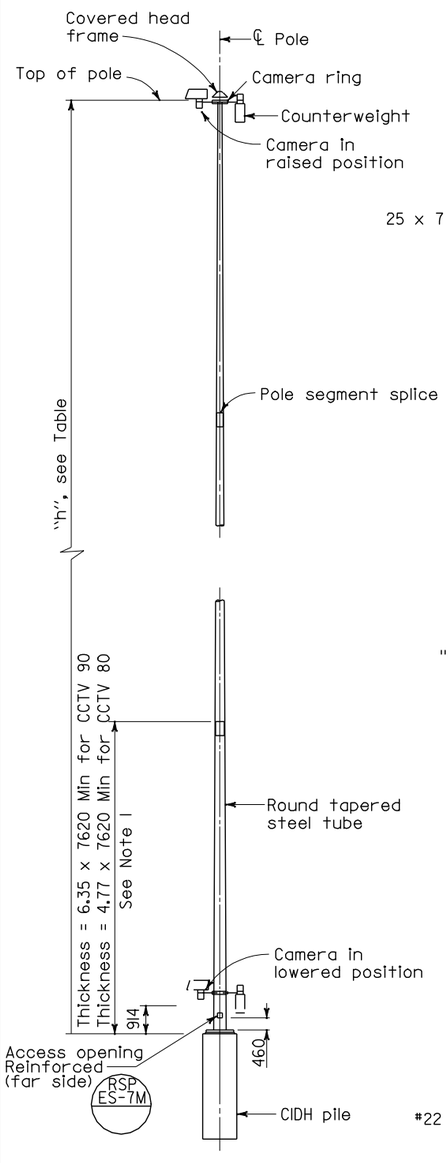

POLE DETAILS

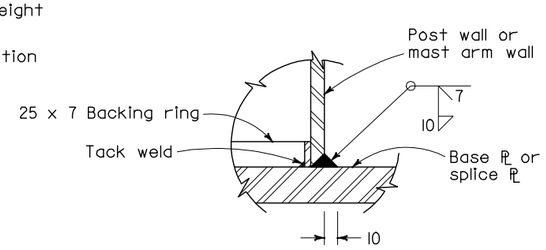

WELD DETAIL

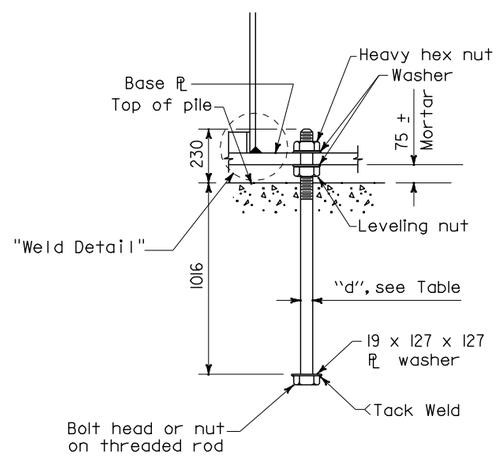

ANCHOR BOLT DETAIL

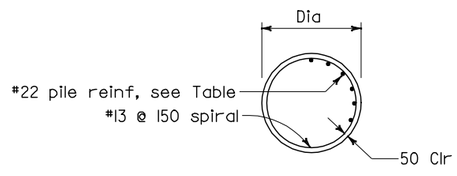

SECTION A-A

CIDH PILE DETAILS

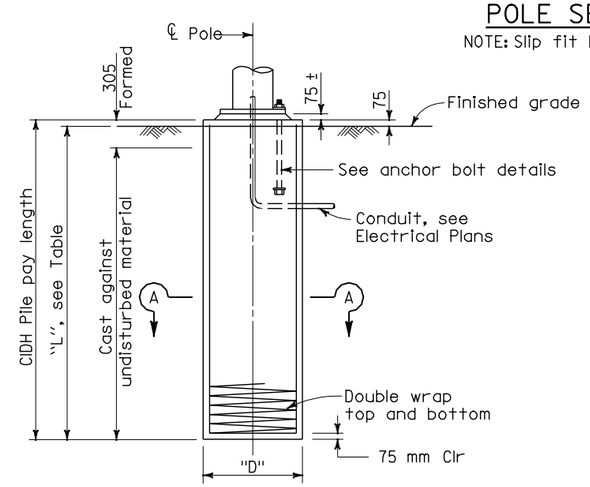

TYPICAL ELEVATION

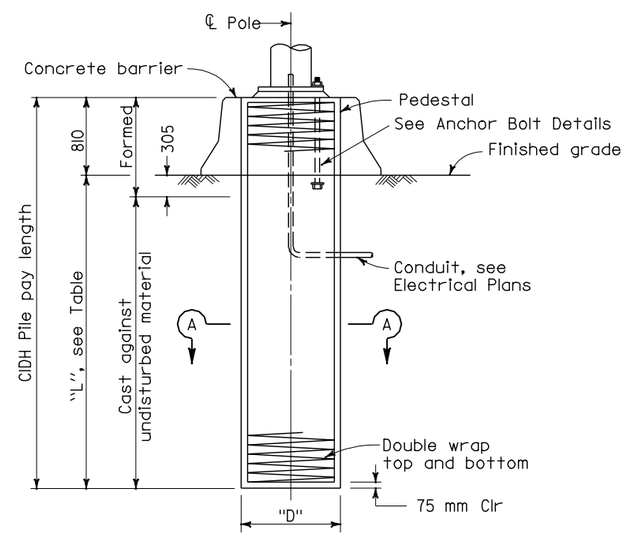

MEDIAN LOCATION

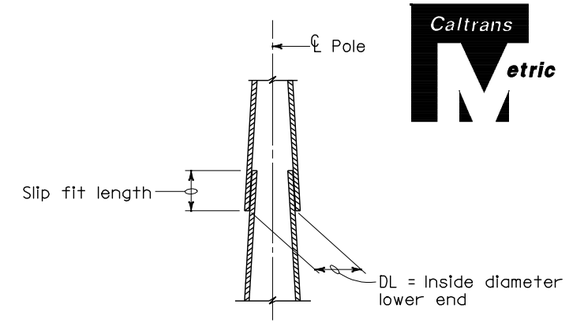

POLE SEGMENT SPLICE DETAIL

NOTE: Slip fit length shall not be less than 1.5 DL.

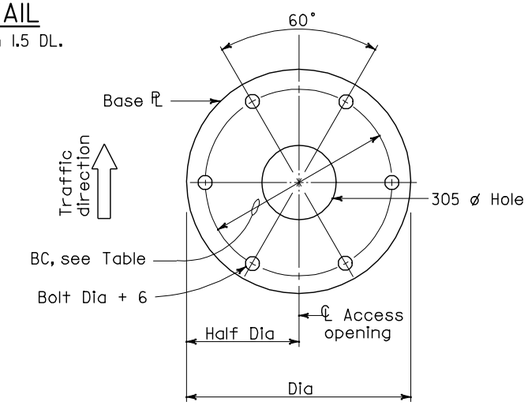

BASE PLATE DETAILS

GENERAL NOTES:

SPECIFICATIONS

Design : AASHTO Standard specifications for structural supports for highway signs, luminaires and traffic signals dated 1994.

LOADING

Wind Loadings : 129 km/h

UNIT STRESSES

Structural Steel : f_s Maximum allowed for design of tapered steel tube (pole) to be 379 MPa.

NOTES

1. Pole details shall suit the lowering device and this foundation plan. Pole details shall be submitted to the Engineer for approval.
2. Pole finishes shall be galvanized.
3. For camera details, see Electrical Plans.
4. Foundation design is based on a maximum wind velocity of 129 km/h.

STATE OF CALIFORNIA
DEPARTMENT OF TRANSPORTATION

ELECTRICAL SYSTEMS (CLOSED CIRCUIT TELEVISION 18.2 m TO 27.4 m HIGH MAST POLE FOUNDATION DETAILS)

NO SCALE

ALL DIMENSIONS ARE IN MILLIMETERS UNLESS OTHERWISE SHOWN

RSP ES-16C DATED JANUARY 24, 2005 SUPERSEDES STANDARD PLAN ES-16C DATED JULY 1, 2004-PAGE 489 OF THE STANDARD PLANS BOOK DATED JULY 2004.

REVISED STANDARD PLAN RSP ES-16C

Caltrans Metric

DIST	COUNTY	ROUTE	KILOMETER POST TOTAL PROJECT	SHEET NO.	TOTAL SHEETS

REGISTERED CIVIL ENGINEER

January 24, 2005
PLANS APPROVAL DATE

REGISTERED PROFESSIONAL ENGINEER Tillat Sattar No. C42892 Exp. 03-31-2006 CIVIL STATE OF CALIFORNIA

The State of California or its officers or agents shall not be responsible for the accuracy or completeness of electronic copies of this plan sheet.

To get to the Caltrans web site, go to: http://www.dot.ca.gov

To accompany plans dated _____

2004 REVISED Std PLAN RSP ES-16C

1-24-05