© 2016 California Department of Transportation
All Rights Reserved

Dist	COUNTY	ROUTE	POST MILES TOTAL PROJECT	SHEET No.	TOTAL SHEETS

LICENSED LANDSCAPE ARCHITECT

April 15, 2016
PLANS APPROVAL DATE

LICENSED LANDSCAPE ARCHITECT
Michael T. Ferrara 3843
Signature
9-30-17
Renewal Date
Date
STATE OF CALIFORNIA

THE STATE OF CALIFORNIA OR ITS OFFICERS OR AGENTS SHALL NOT BE RESPONSIBLE FOR THE ACCURACY OR COMPLETENESS OF SCANNED COPIES OF THIS PLAN SHEET.

TO ACCOMPANY PLANS DATED _____

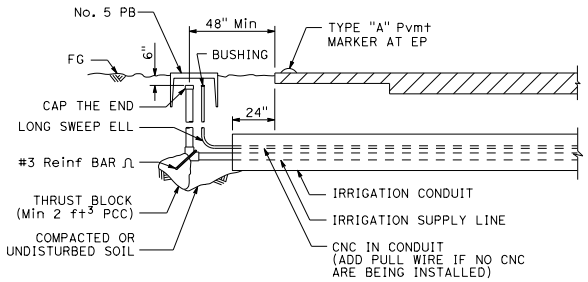

SECTION

IRRIGATION CONDUIT

UNDER TRAVELED WAY

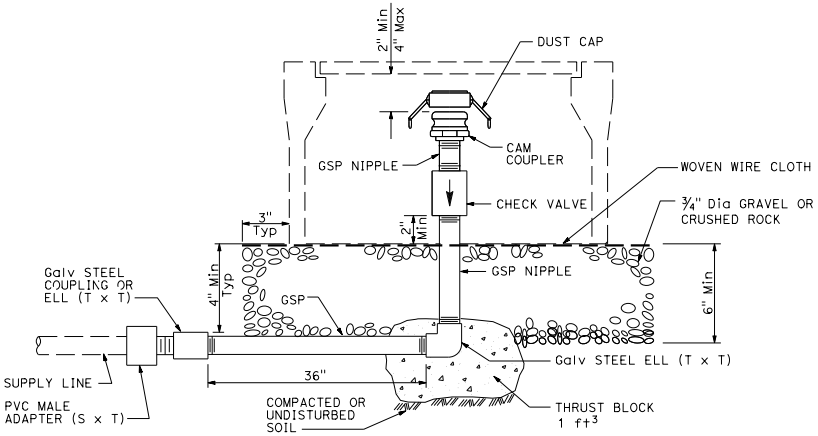

ELEVATION

CAM COUPLER ASSEMBLY

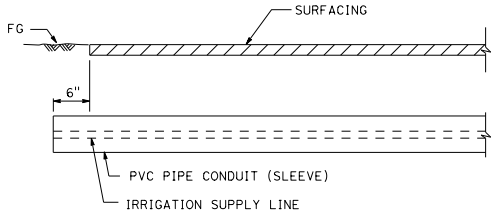

SECTION

PVC PIPE CONDUIT (SLEEVE)

UNDER SIDEWALKS, DRIVEWAYS AND PATHS

STATE OF CALIFORNIA
DEPARTMENT OF TRANSPORTATION

LANDSCAPE DETAILS

NO SCALE

RSP H8 DATED APRIL 15, 2016 SUPERSEDES STANDARD PLAN H8
DATED OCTOBER 30, 2015 - PAGE 237 OF THE STANDARD PLANS BOOK DATED 2015.

REVISED STANDARD PLAN RSP H8

2015 REVISED STANDARD PLAN RSP H8

3-24-16

© 2016 California Department of Transportation
All Rights Reserved

Dist	COUNTY	ROUTE	POST MILES TOTAL PROJECT	SHEET No.	TOTAL SHEETS

Theresa Gabriel
REGISTERED ELECTRICAL ENGINEER

April 15, 2016
PLANS APPROVAL DATE

REGISTERED PROFESSIONAL ENGINEER Thereso Aziz Gabriel No. E15129 Exp. 6-30-16 ELECTRICAL STATE OF CALIFORNIA

THE STATE OF CALIFORNIA OR ITS OFFICERS OR AGENTS SHALL NOT BE RESPONSIBLE FOR THE ACCURACY OR COMPLETENESS OF SCANNED COPIES OF THIS PLAN SHEET.

TO ACCOMPANY PLANS DATED _____

EQUIPMENT IDENTIFICATION

ILLUMINATED SIGN IDENTIFICATION:

SIGN No. 12345 — SIGN EQUIPMENT IDENTIFICATION CHARACTERS - PLACE ON POST OR STRUCTURE

10 ISL SCL 1.0

- 1.0 — TRANSFORMER RATING (kVA)
- SCL — LIGHTING CONTROL TYPE
- 10 ISL — NUMBER AND TYPE OF FIXTURES

} DO NOT PLACE ON STANDARD OR STRUCTURE

ELECTROLIER OR EQUIPMENT IDENTIFICATION:

L2745 - 15'-0"

- 15'-0" — MAST ARM LENGTH, IF SHOWN. DO NOT PLACE ON STANDARD OR STRUCTURE
- L2745 — EQUIPMENT IDENTIFICATION CHARACTERS - PLACE ON STANDARD OR STRUCTURE. EXISTING EQUIPMENT IDENTIFICATION CHARACTERS ARE SHOWN IN PARENTHESIS

CONDUIT AND CONDUCTOR IDENTIFICATION:

1½"C, 2#10, 15#14, 2 DLC, 12P#18

- PAIR
- 2#10, 15#14, 2 DLC, 12P#18 — NUMBER AND SIZE OF CONDUCTORS AND CABLES
- 1½"C — SIZE OF CONDUIT IN INCHES

Ø1, Ø2, Ø2P, etc.	TRAFFIC PHASE IDENTIFICATION FOR SIGNALS, DETECTORS AND PHASE DIAGRAMS
1 2 3	LEGEND NUMBERS
A B C	EQUIPMENT, SIGNAL POLES, INSTALLATION OR ITEMS
1 2 3	CONDUIT RUN NUMBERS

SIGNAL AND LIGHTING STANDARD (TYPICAL DESIGNATION):

19A - 3 - 100

- 100 — WIND VELOCITY = 100 mph
- 3 — CASE 3 ARM LOADING
- 19A — STANDARD TYPE
- STANDARD PLAN SHEET NUMBER
- DETAIL, NUMBER, SECTION, TYPE OR ELEVATION

MISCELLANEOUS EQUIPMENT

NEW	EXISTING	
CMS	cms	CHANGEABLE MESSAGE SIGN
		CLOSED CIRCUIT TELEVISION CAMERA
		HIGHWAY ADVISORY RADIO POLE AND ANTENNA
EMS	ems	LED EXTINGUISHABLE MESSAGE SIGN
M V	m v	DETECTION DEVICE M = MICROWAVE SENSOR V = VIDEO IMAGE SENSOR

WIRING DIAGRAM LEGEND

- EXTERNAL CONDUCTOR
- CONDUCTOR OR BUS
- TIE POINT
- CONTACTOR COIL
- CONTACTOR, NO CONTACT
- TERMINAL BLOCKS
- CONTACTOR, NC CONTACT
- ENCLOSURE BOND
- GROUNDING ELECTRODE
- CIRCUIT BREAKER
- RECEPTACLE

PULL BOXES

NEW	EXISTING	
		PULL BOX, No. 5 UNLESS OTHERWISE INDICATED OR NOTED
3	9A(21)	PULL BOX, ADDITIONAL DESIGNATIONS OR DESCRIPTIONS

- 3 No. 3½ PULL BOX
- 5 No. 5 PULL BOX
- 6 No. 6 PULL BOX
- 7 No. 7 PULL BOX (CEILING)
- 8 No. 8 PULL BOX
- 9 No. 9 PULL BOX (STRUCTURE)
- 9A No. 9A PULL BOX (STRUCTURE)

- (C) COMMUNICATIONS PULL BOX
- (E) PULL BOX WITH EXTENSION
- (S) SPRINKLER CONTROL PULL BOX
- (21) ANCHOR BOLTS AND CONDUIT FOR FUTURE INSTALLATION OF TYPE 21 STANDARD
- (T) TRAFFIC PULL BOX

VEHICLE DETECTORS

5 J 9 U

- VEHICLE DETECTOR DESIGNATION
- U = UPPER
- L = LOWER
- SLOT NUMBER IN INPUT FILE
- INPUT FILE (I OR J)
- PHASE

NEW	EXISTING	
		TYPE A LOOP DETECTOR. OUTLINE OF SAW CUT SHOWN
		TYPE B LOOP DETECTOR. OUTLINE OF SAW CUT SHOWN
		TYPE C LOOP DETECTOR. OUTLINE OF SAW CUT SHOWN
		TYPE D LOOP DETECTOR. OUTLINE OF SAW CUT SHOWN
		TYPE E LOOP DETECTOR. OUTLINE OF SAW CUT SHOWN
		TYPE Q LOOP DETECTOR. OUTLINE OF SAW CUT SHOWN
DH	dh	DETECTOR HANDHOLE
		MICROWAVE OR VIDEO DETECTION ZONE

STATE OF CALIFORNIA
DEPARTMENT OF TRANSPORTATION

ELECTRICAL SYSTEMS (LEGEND AND ABBREVIATIONS)

NO SCALE

RSP ES-1C DATED APRIL 15, 2016 SUPERSEDES STANDARD PLAN ES-1C
DATED OCTOBER 30, 2015 - PAGE 420 OF THE STANDARD PLANS BOOK DATED 2015.

REVISED STANDARD PLAN RSP ES-1C

2015 REVISED STANDARD PLAN RSP ES-1C

1-22-16

© 2016 California Department of Transportation
All Rights Reserved

Dist	COUNTY	ROUTE	POST MILES TOTAL PROJECT	SHEET No.	TOTAL SHEETS

Theresa Gabriel
REGISTERED ELECTRICAL ENGINEER

April 15, 2016
PLANS APPROVAL DATE

REGISTERED PROFESSIONAL ENGINEER Theresa Aziz Gabriel No. E15129 Exp. 6-30-16 ELECTRICAL STATE OF CALIFORNIA

THE STATE OF CALIFORNIA OR ITS OFFICERS OR AGENTS SHALL NOT BE RESPONSIBLE FOR THE ACCURACY OR COMPLETENESS OF SCANNED COPIES OF THIS PLAN SHEET.

TO ACCOMPANY PLANS DATED _____

2015 REVISED STANDARD PLAN RSP ES-3B

NOTES:

1. Type G, M, P, R, S and Model 336L cabinets shall be installed with the back toward the nearest lane of traffic.
2. In unpaved areas, a raised portland cement concrete pad shall be constructed in front of each controller cabinet. The pad shall be 3'-0" x 3'-0" x 4" for a Type G cabinet and shall be 3'-0" x 4" thick x width of foundation for Type M, P, R, S and Model 336L cabinets.
3. The steel pedestal, base plate, and bolt circle for Type G cabinet shall be the same as that shown for a Type 1-C Standard (see ES-7B). Pedestal shall be 2'-1" to 2'-6" in length. Anchor bolts shall be ¾" ø x 1'-6" with a 2" - 90° bend. Four bolts required per cabinet.
4. Type G cabinet shall be provided with a slipfitter to permit mounting an 4½" outside diameter pedestal. Slipfitter shall be bolted to bottom of the cabinet.
5. A 1" drain shall be provided through the foundation of a Type M or Model 336L cabinet. Drain pipe shall be screened.
6. Cabinet shelves shall be adjustable for vertical spacing and shall be removable. Type M, P, R and S cabinets shall be provided with a minimum of two shelves.
7. Controller units, plug-mounted equipment, shelf-mounted equipment and wall-mounted equipment shall be located to permit safe and easy removal or replacement without removing any other piece of equipment.
8. Where telephone interconnect is required, a minimum of 5" clear vertical space shall be provided inside the cabinet for the equipment.
9. Telephone interconnect conductors shall be enclosed in a ¾"C or larger conduit through the foundation. Type 4 conduit shall be used to separate telephone and power conductors in cabinets or pedestals.
10. Anchor bolts for Type M, P, R, S and Model 336L cabinets shall be ¾" ø x 1'-6" with a 2" - 90° bend.

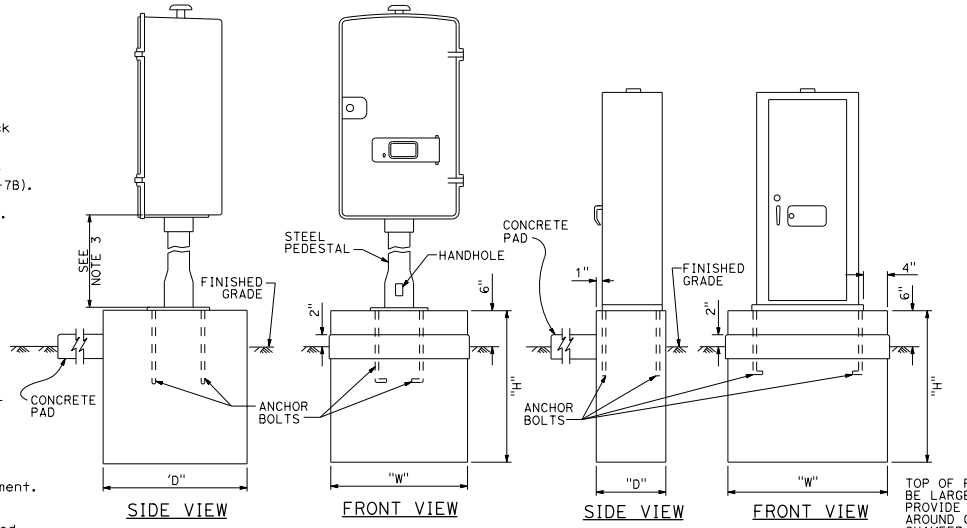

SIDE VIEW FRONT VIEW

FOUNDATION FOR TYPE G CABINET

DETAIL A

SIDE VIEW FRONT VIEW

FOUNDATION FOR TYPE P, R AND S CABINETS

DETAIL B

CABINET TYPE	FOUNDATION		
	"W"	"H"	"D"
G	2'-0"	3'-6"	2'-0"
M	3'-2"	2'-6"	1'-6"
P	4'-4½"	1'-6"	2'-4"
R	4'-2"	1'-6"	2'-4"
S	5'-11½"	1'-6"	2'-4"

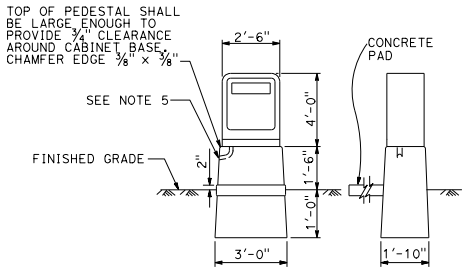

FRONT VIEW SIDE VIEW

PEDESTAL FOUNDATION FOR TYPE M OR MODEL 336L CABINET

DETAIL C

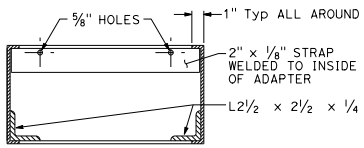

SECTION A-A

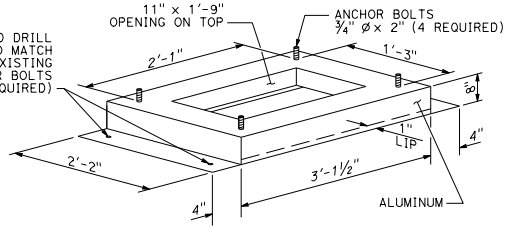

TYPE PR CABINET ADAPTER

See Notes A and B

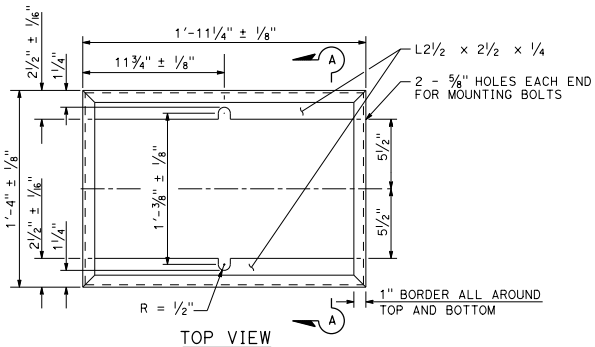

TOP VIEW

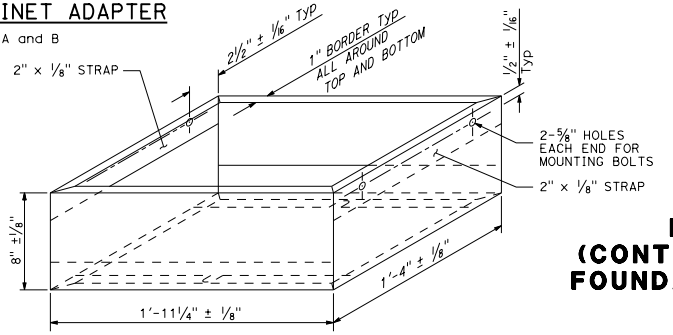

TYPE M CABINET ADAPTER

See Notes A, C, and D

NOTES:

A. Material: 0.188" thickness aluminum plate.
B. Adapter for Type P or Type R cabinet foundation.
C. Adapter for Type M cabinet foundation.
D. Mounting bolts shall be ⅜" ø minimum size.

STATE OF CALIFORNIA
DEPARTMENT OF TRANSPORTATION

ELECTRICAL SYSTEMS (CONTROLLER CABINET ADAPTER, FOUNDATIONS, AND PAD DETAILS)

NO SCALE

RSP ES-3B DATED APRIL 15, 2016 SUPERSEDES STANDARD PLAN ES-3B
DATED OCTOBER 30, 2015 - PAGE 429 OF THE STANDARD PLANS BOOK DATED 2015.

REVISED STANDARD PLAN RSP ES-3B

1-22-16

© 2016 California Department of Transportation
All Rights Reserved

Dist	COUNTY	ROUTE	POST MILES TOTAL PROJECT	SHEET No.	TOTAL SHEETS

REGISTERED ELECTRICAL ENGINEER

April 15, 2016
PLANS APPROVAL DATE

REGISTERED PROFESSIONAL ENGINEER Theresa Aziz Gabriel No. E15129 Exp. 6-30-16 ELECTRICAL STATE OF CALIFORNIA

THE STATE OF CALIFORNIA OR ITS OFFICERS OR AGENTS SHALL NOT BE RESPONSIBLE FOR THE ACCURACY OR COMPLETENESS OF SCANNED COPIES OF THIS PLAN SHEET.

TO ACCOMPANY PLANS DATED _____

NOTES:

1. Controller units, plug-mounted equipment, shelf-mounted equipment and wall-mounted equipment shall be located to permit safe and easy removal or replacement without removing any other piece of equipment.
2. Cabinet fan may be installed at an alternate location near the top of the cabinet when approved by the Engineer.
3. Where telephone interconnect is required, a minimum of 5" clear vertical space shall be provided inside the cabinet for the equipment.
4. Telephone interconnect conductors shall be enclosed in a ¾"C or larger conduit through the foundation. Type 4 conduit shall be used to separate telephone and power conductors in cabinets.

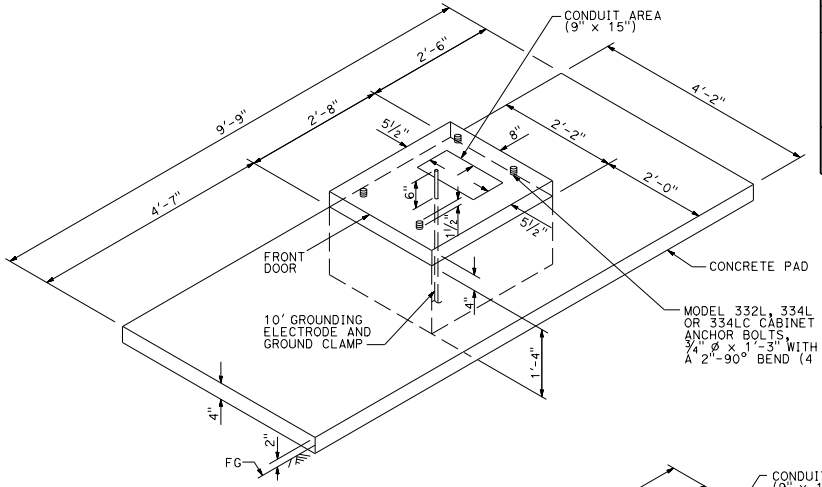

FOUNDATION AND PAD DETAIL

Model 332L, 334L and 334LC

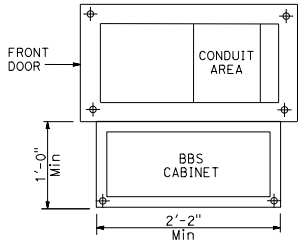

BASE PLAN FOR BBS MOUNTED TO THE MODEL 332L CABINET

(FOR DIMENSIONS AND DETAILS NOT SHOWN, SEE CABINET HOUSING DETAILS OF THE TRANSPORTATION ELECTRICAL EQUIPMENT SPECIFICATION (TEES))

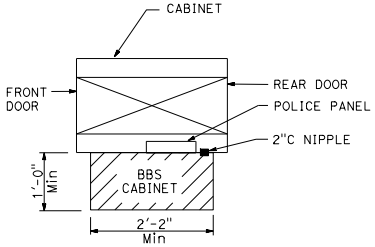

TOP VIEW

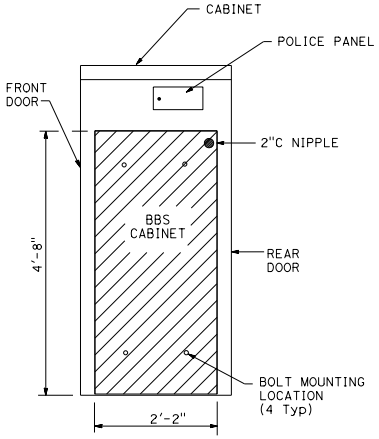

SIDE VIEW

BBS CABINET MOUNTED TO THE MODEL 332L CABINET

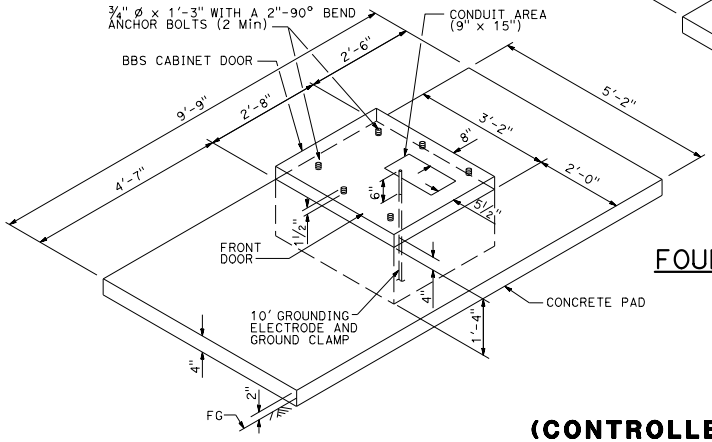

LEFT SIDE INSTALLATION

DETAIL A

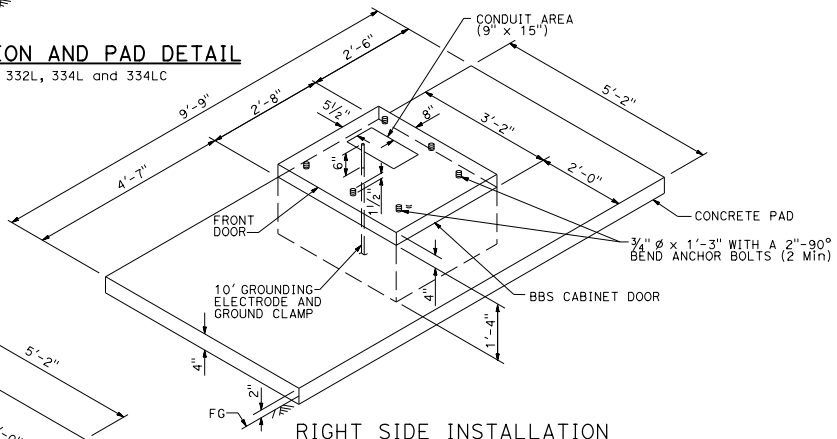

RIGHT SIDE INSTALLATION

DETAIL B

MODIFIED MODEL 332L CABINET FOUNDATION DETAIL FOR BATTERY BACKUP SYSTEM

STATE OF CALIFORNIA
DEPARTMENT OF TRANSPORTATION

ELECTRICAL SYSTEMS
(CONTROLLER CABINET FOUNDATION AND PAD DETAILS)

NO SCALE

RSP ES-3C DATED APRIL 15, 2016 SUPERSEDES STANDARD PLAN ES-3C
DATED OCTOBER 30, 2015 - PAGE 430 OF THE STANDARD PLANS BOOK DATED 2015.

REVISED STANDARD PLAN RSP ES-3C

2015 REVISED STANDARD PLAN RSP ES-3C

1-12-16

© 2016 California Department of Transportation
All Rights Reserved

Dist	COUNTY	ROUTE	POST MILES TOTAL PROJECT	SHEET No.	TOTAL SHEETS

Theresa Gabriel
REGISTERED ELECTRICAL ENGINEER

April 15, 2016
PLANS APPROVAL DATE

REGISTERED PROFESSIONAL ENGINEER Theresa Aziz Gabriel No. E15129 Exp. 6-30-16 ELECTRICAL STATE OF CALIFORNIA

THE STATE OF CALIFORNIA OR ITS OFFICERS OR AGENTS SHALL NOT BE RESPONSIBLE FOR THE ACCURACY OR COMPLETENESS OF SCANNED COPIES OF THIS PLAN SHEET.

TO ACCOMPANY PLANS DATED _____

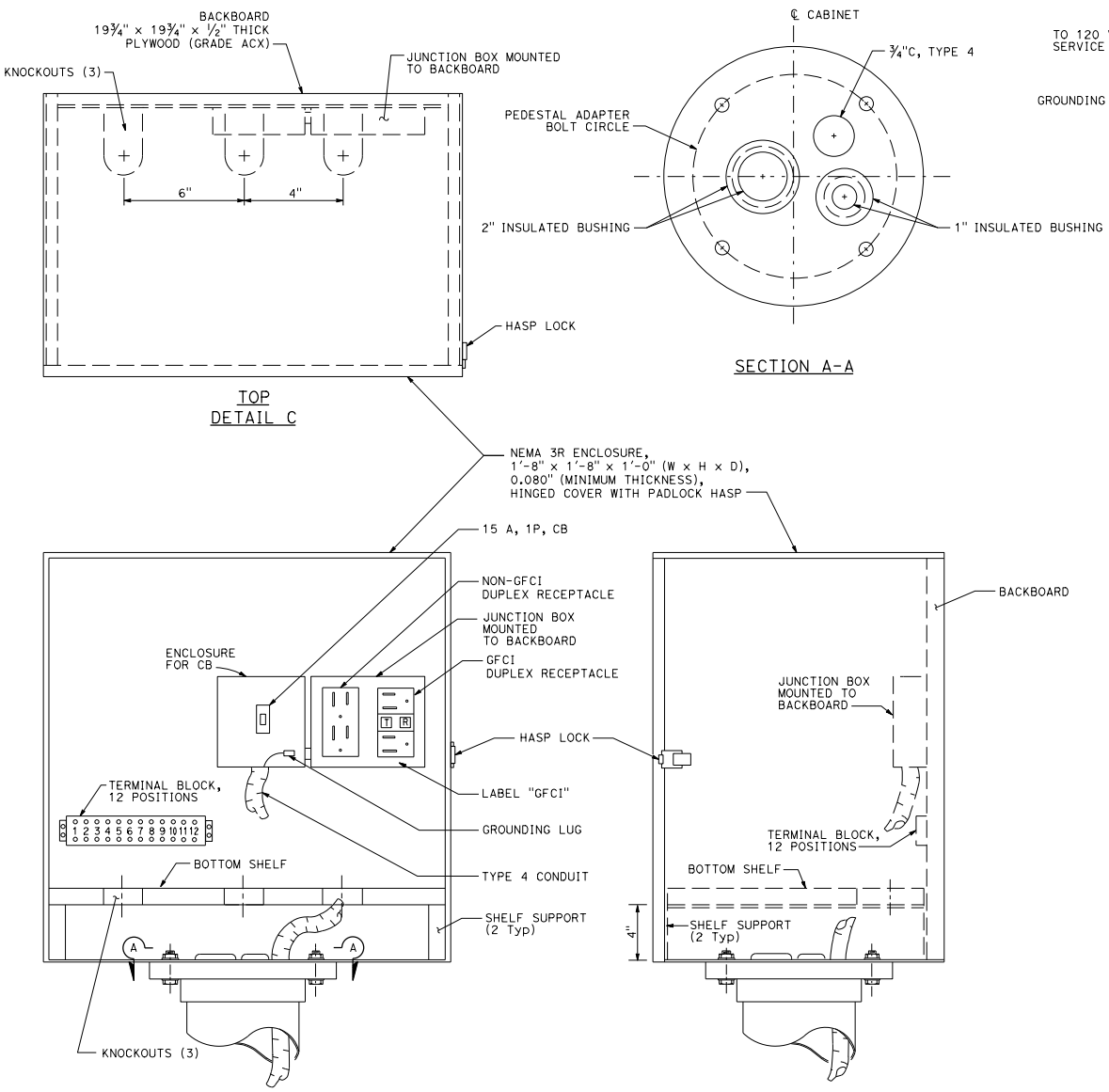

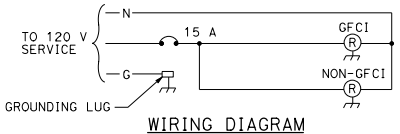

WIRING DIAGRAM
DETAIL D

NOTES:

1. Dimensions are nominal.
2. The steel pedestal, base plate, and bolt circle for the telephone demarcation cabinet shall be the same as that shown for a Type 1-C Standard. The steel pedestal shall be 2'-1" to 2'-6" in length. Anchor bolts shall be ¾" ø x 1'-6" with a 2" - 90° bend. Four bolts required per cabinet.
3. Telephone interconnect conductors shall be enclosed in a ¾"C or larger conduit through the foundation. Type 4 conduit shall be used to separate telephone and power conductors in the cabinet and pedestal.
4. Mount cabinet on Type G cabinet pedestal and foundation (see RSP ES-3B).

FASTENER SCHEDULE

BACKBOARD	4 - ¾" (LENGTH) WOOD SCREWS
2 SHELF SUPPORTS	4 - ¾" (LENGTH) WOOD SCREWS
JUNCTION BOX	4 - ½" (LENGTH) WOOD SCREWS
TERMINAL BLOCK	4 - ¾" (LENGTH) WOOD SCREWS

STATE OF CALIFORNIA
DEPARTMENT OF TRANSPORTATION

ELECTRICAL SYSTEMS (TELEPHONE DEMARCATION CABINET, TYPE A)

NO SCALE

RSP ES-3D DATED APRIL 15, 2016 SUPERSEDES STANDARD PLAN ES-3D
DATED OCTOBER 30, 2015 - PAGE 431 OF THE STANDARD PLANS BOOK DATED 2015.

REVISED STANDARD PLAN RSP ES-3D

2015 REVISED STANDARD PLAN RSP ES-3D

1-12-16

© 2016 California Department of Transportation
All Rights Reserved

Dist	COUNTY	ROUTE	POST MILES TOTAL PROJECT	SHEET No.	TOTAL SHEETS

Theresa Gabriel
REGISTERED ELECTRICAL ENGINEER

April 15, 2016
PLANS APPROVAL DATE

REGISTERED PROFESSIONAL ENGINEER Theresa Aziz Gabriel No. E15129 Exp. 6-30-16 ELECTRICAL STATE OF CALIFORNIA

THE STATE OF CALIFORNIA OR ITS OFFICERS OR AGENTS SHALL NOT BE RESPONSIBLE FOR THE ACCURACY OR COMPLETENESS OF SCANNED COPIES OF THIS PLAN SHEET.

TO ACCOMPANY PLANS DATED _____

NOTE:

1. Dimensions are nominal.

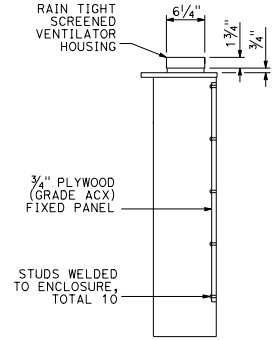

SECTION A-A

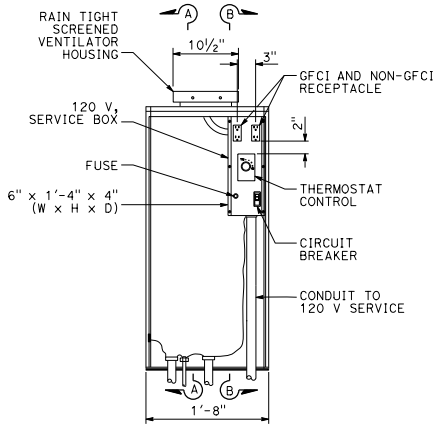

FRONT VIEW

INTERIOR DETAIL A

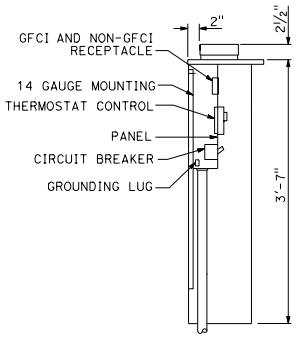

SECTION B-B

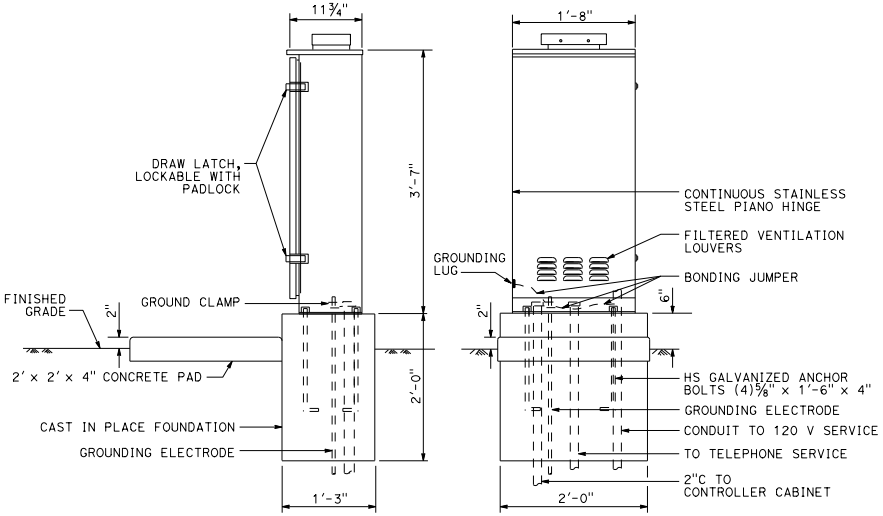

SIDE VIEW FRONT VIEW

EXTERIOR DETAIL B

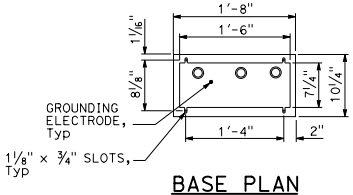

BASE PLAN

DETAIL C

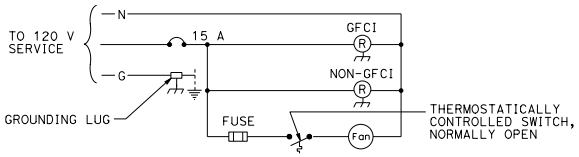

WIRING DIAGRAM

DETAIL D

STATE OF CALIFORNIA
DEPARTMENT OF TRANSPORTATION

ELECTRICAL SYSTEMS (TELEPHONE DEMARCATION CABINET, TYPE B)

NO SCALE

RSP ES-3E DATED APRIL 15, 2016 SUPERSEDES STANDARD PLAN ES-3E
DATED OCTOBER 30, 2015 - PAGE 432 OF THE STANDARD PLANS BOOK DATED 2015.

REVISED STANDARD PLAN RSP ES-3E

2015 REVISED STANDARD PLAN RSP ES-3E

1-12-16

© 2016 California Department of Transportation
All Rights Reserved

Dist	COUNTY	ROUTE	POST MILES TOTAL PROJECT	SHEET No.	TOTAL SHEETS

Theresa Gabriel
REGISTERED ELECTRICAL ENGINEER

April 15, 2016
PLANS APPROVAL DATE

REGISTERED PROFESSIONAL ENGINEER Theresa Aziz Gabriel No. E15129 Exp. 6-30-16 ELECTRICAL STATE OF CALIFORNIA

THE STATE OF CALIFORNIA OR ITS OFFICERS OR AGENTS SHALL NOT BE RESPONSIBLE FOR THE ACCURACY OR COMPLETENESS OF SCANNED COPIES OF THIS PLAN SHEET.

TO ACCOMPANY PLANS DATED _____

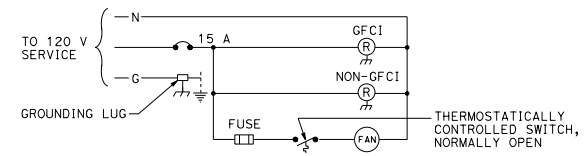

WIRING DIAGRAM
DETAIL F

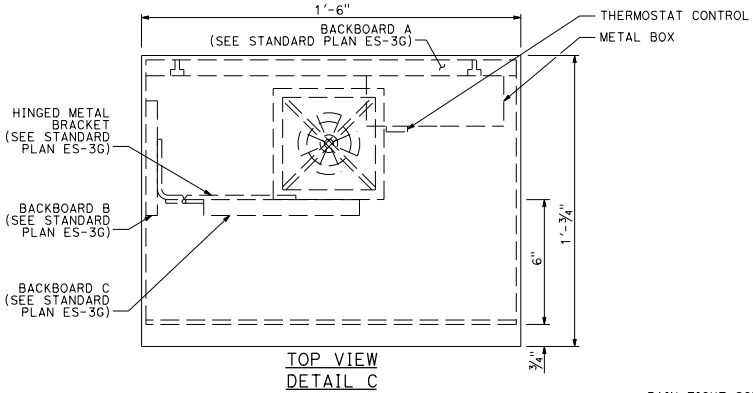

TOP VIEW
DETAIL C

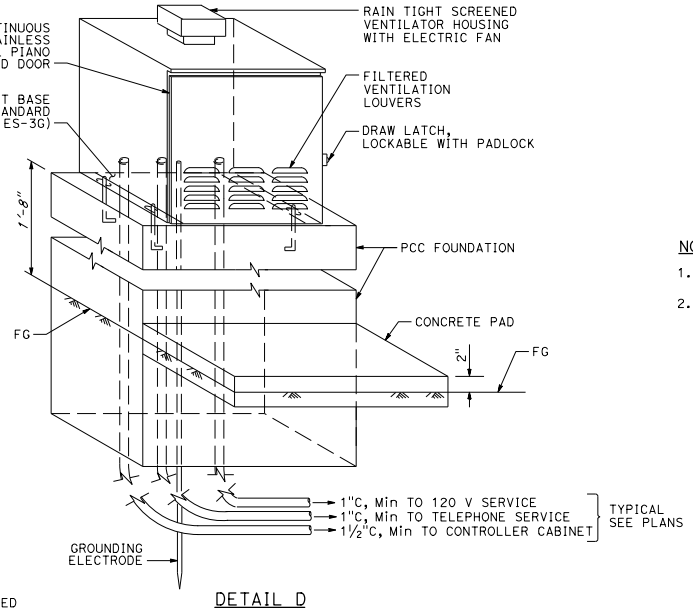

DETAIL D

NOTES:

1. Dimensions are nominal.
2. Hardware for fastening of mounting boards:
   a. Fasten backboard A and backboard B to telephone demarcation cabinet with 3/16" ø x ¾" stainless steel carriage bolts (8 required).
   b. Fasten hinged metal bracket to backboard B and backboard C to hinged metal bracket with number No. 10 x ¾" wood screws (9 required).

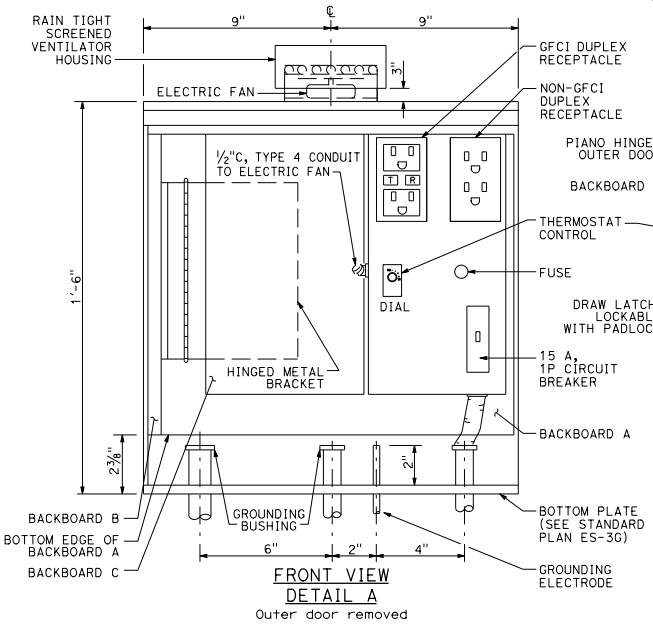

FRONT VIEW
DETAIL A
Outer door removed

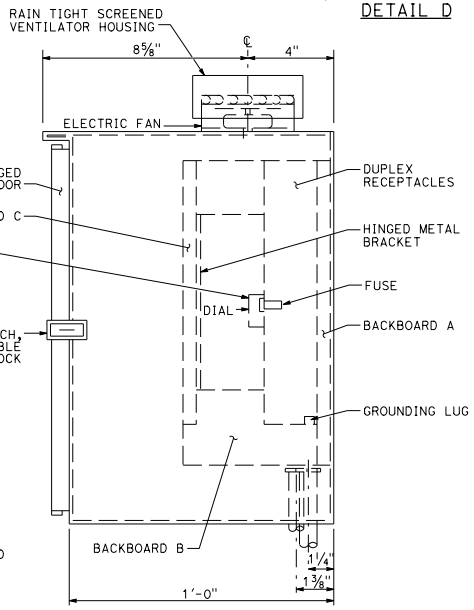

SIDE VIEW
DETAIL B

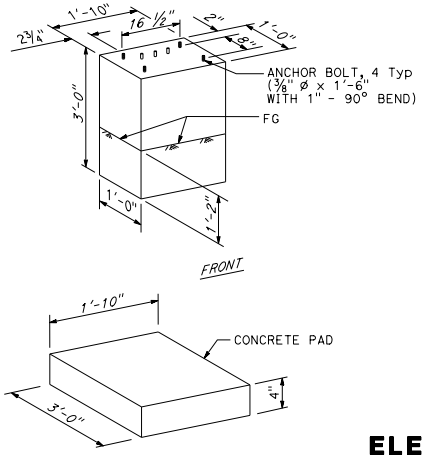

CONCRETE PAD

FOUNDATION AND PAD DETAILS

DETAIL E

STATE OF CALIFORNIA
DEPARTMENT OF TRANSPORTATION

ELECTRICAL SYSTEMS (TELEPHONE DEMARCATION CABINET, TYPE C)

NO SCALE

RSP ES-3F DATED APRIL 15, 2016 SUPERSEDES STANDARD PLAN ES-3F
DATED OCTOBER 30, 2015 - PAGE 433 OF THE STANDARD PLANS BOOK DATED 2015.

REVISED STANDARD PLAN RSP ES-3F

2015 REVISED STANDARD PLAN RSP ES-3F

1-12-16

© 2016 California Department of Transportation
All Rights Reserved

Dist	COUNTY	ROUTE	POST MILES TOTAL PROJECT	SHEET No.	TOTAL SHEETS

Theresa Gabriel
REGISTERED ELECTRICAL ENGINEER

April 15, 2016
PLANS APPROVAL DATE

REGISTERED PROFESSIONAL ENGINEER
Theresa Aziz Gabriel
No. E15129
Exp. 6-30-16
ELECTRICAL
STATE OF CALIFORNIA

THE STATE OF CALIFORNIA OR ITS OFFICERS OR AGENTS SHALL NOT BE RESPONSIBLE FOR THE ACCURACY OR COMPLETENESS OF SCANNED COPIES OF THIS PLAN SHEET.

TO ACCOMPANY PLANS DATED _____

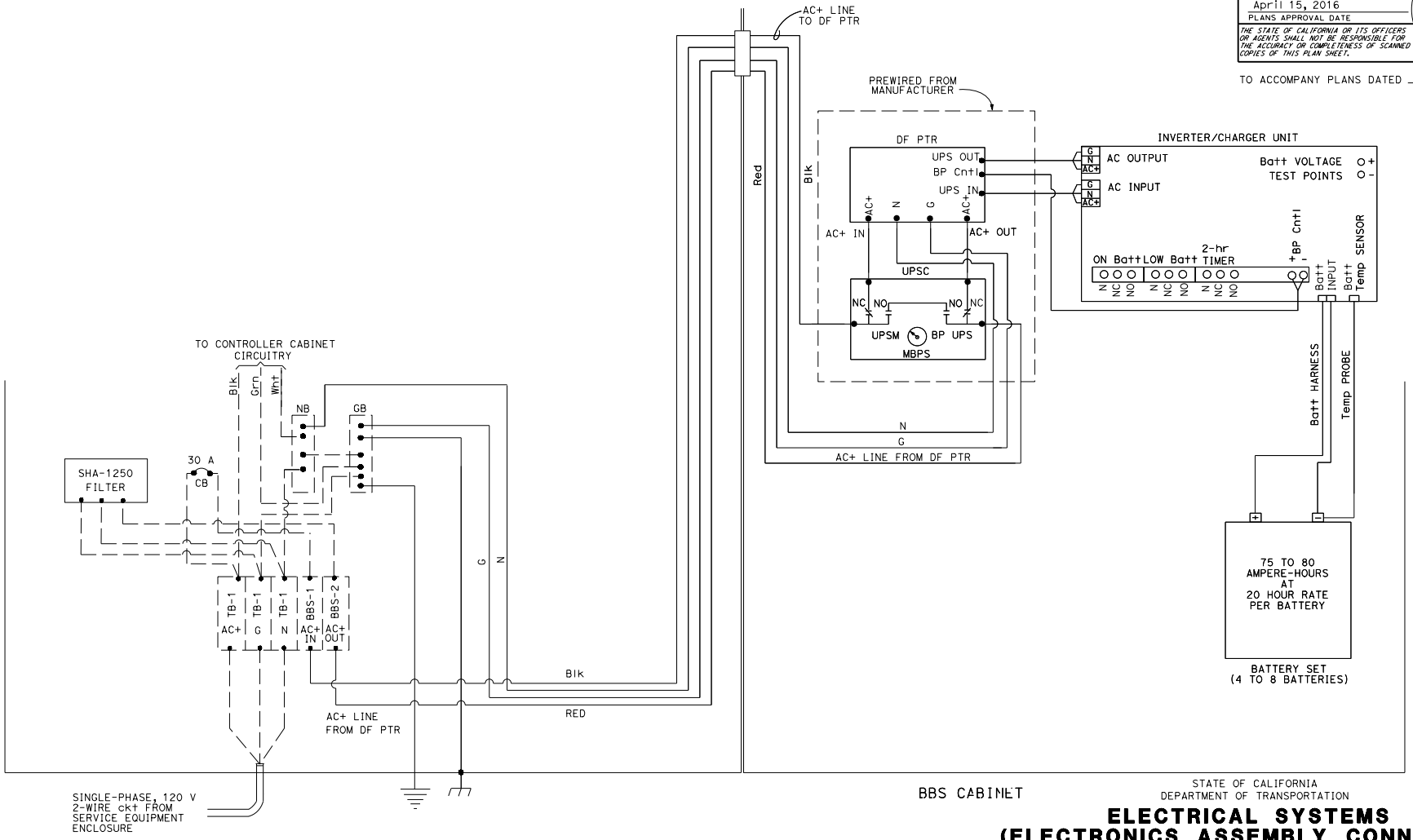

STATE OF CALIFORNIA
DEPARTMENT OF TRANSPORTATION

ELECTRICAL SYSTEMS (ELECTRONICS ASSEMBLY CONNECTION DIAGRAM, WITH BYPASS CONTROL LINE)

NO SCALE

RSP ES-3I DATED APRIL 15, 2016 SUPERSEDES STANDARD PLAN ES-3I
DATED OCTOBER 30, 2015 - PAGE 436 OF THE STANDARD PLANS BOOK DATED 2015.

REVISED STANDARD PLAN RSP ES-3I

2015 REVISED STANDARD PLAN RSP ES-3I

1-12-16

© 2016 California Department of Transportation
All Rights Reserved

Dist	COUNTY	ROUTE	POST MILES TOTAL PROJECT	SHEET No.	TOTAL SHEETS

Theresa Gabriel
REGISTERED ELECTRICAL ENGINEER

April 15, 2016
PLANS APPROVAL DATE

REGISTERED PROFESSIONAL ENGINEER
Theresa Aziz Gabriel
No. E15129
Exp. 6-30-16
ELECTRICAL
STATE OF CALIFORNIA

THE STATE OF CALIFORNIA OR ITS OFFICERS OR AGENTS SHALL NOT BE RESPONSIBLE FOR THE ACCURACY OR COMPLETENESS OF SCANNED COPIES OF THIS PLAN SHEET.

TO ACCOMPANY PLANS DATED _____

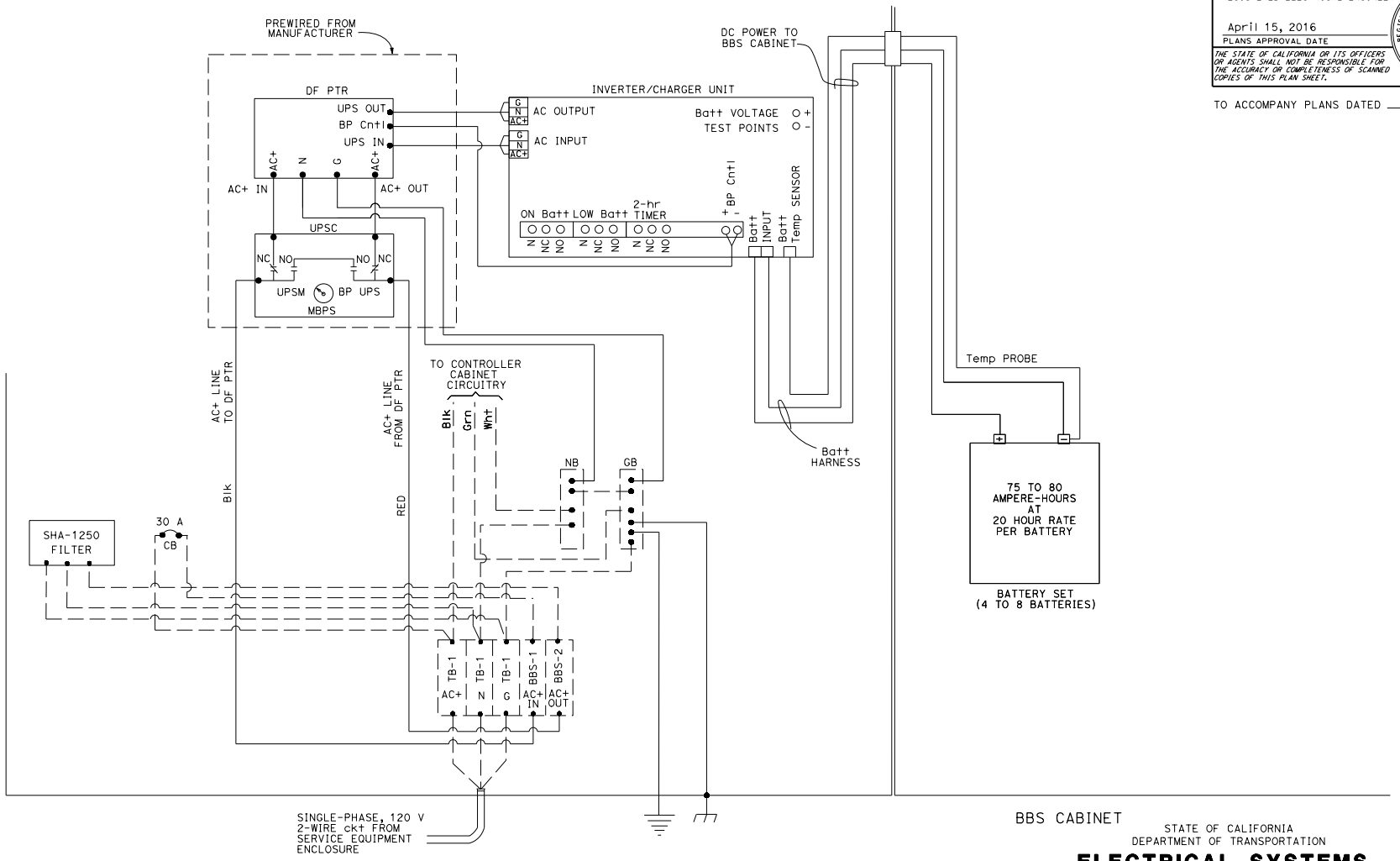

STATE OF CALIFORNIA
DEPARTMENT OF TRANSPORTATION

ELECTRICAL SYSTEMS (ELECTRONICS ASSEMBLY CONNECTION DIAGRAM, WITH BYPASS CONTROL LINE)

NO SCALE

RSP ES-3J DATED APRIL 15, 2016 SUPERSEDES STANDARD PLAN ES-3J
DATED OCTOBER 30, 2015 - PAGE 437 OF THE STANDARD PLANS BOOK DATED 2015.

REVISED STANDARD PLAN RSP ES-3J

2015 REVISED STANDARD PLAN RSP ES-3J

1-12-16

© 2016 California Department of Transportation
All Rights Reserved

Dist	COUNTY	ROUTE	POST MILES TOTAL PROJECT	SHEET No.	TOTAL SHEETS

Theresa Gabriel
REGISTERED ELECTRICAL ENGINEER

April 15, 2016
PLANS APPROVAL DATE

REGISTERED PROFESSIONAL ENGINEER
Theresa Aziz Gabriel
No. E15129
Exp. 6-30-16
ELECTRICAL
STATE OF CALIFORNIA

THE STATE OF CALIFORNIA OR ITS OFFICERS OR AGENTS SHALL NOT BE RESPONSIBLE FOR THE ACCURACY OR COMPLETENESS OF SCANNED COPIES OF THIS PLAN SHEET.

TO ACCOMPANY PLANS DATED _____

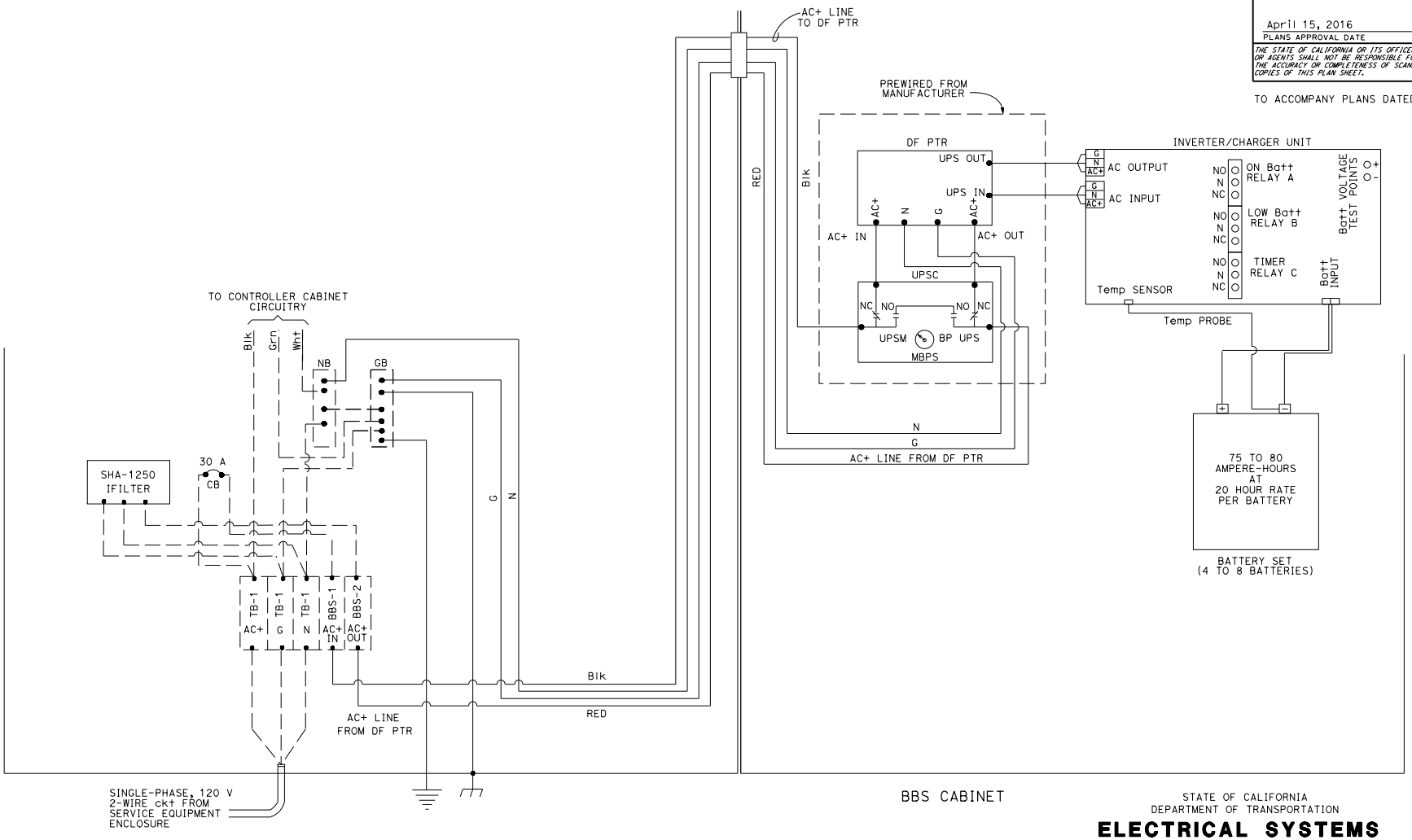

STATE OF CALIFORNIA
DEPARTMENT OF TRANSPORTATION

ELECTRICAL SYSTEMS (ELECTRONICS ASSEMBLY CONNECTION DIAGRAM, WITHOUT BYPASS CONTROL LINE)

NO SCALE

RSP ES-3K DATED APRIL 15, 2016 SUPERSEDES STANDARD PLAN ES-3K
DATED OCTOBER 30, 2015 - PAGE 438 OF THE STANDARD PLANS BOOK DATED 2015.

REVISED STANDARD PLAN RSP ES-3K

2015 REVISED STANDARD PLAN RSP ES-3K

1-12-16

© 2016 California Department of Transportation
All Rights Reserved

Dist	COUNTY	ROUTE	POST MILES TOTAL PROJECT	SHEET No.	TOTAL SHEETS

Theresa Gabriel
REGISTERED ELECTRICAL ENGINEER

April 15, 2016
PLANS APPROVAL DATE

REGISTERED PROFESSIONAL ENGINEER
Theresa Aziz Gabriel
No. E15129
Exp. 6-30-16
ELECTRICAL
STATE OF CALIFORNIA

THE STATE OF CALIFORNIA OR ITS OFFICERS OR AGENTS SHALL NOT BE RESPONSIBLE FOR THE ACCURACY OR COMPLETENESS OF SCANNED COPIES OF THIS PLAN SHEET.

TO ACCOMPANY PLANS DATED _____

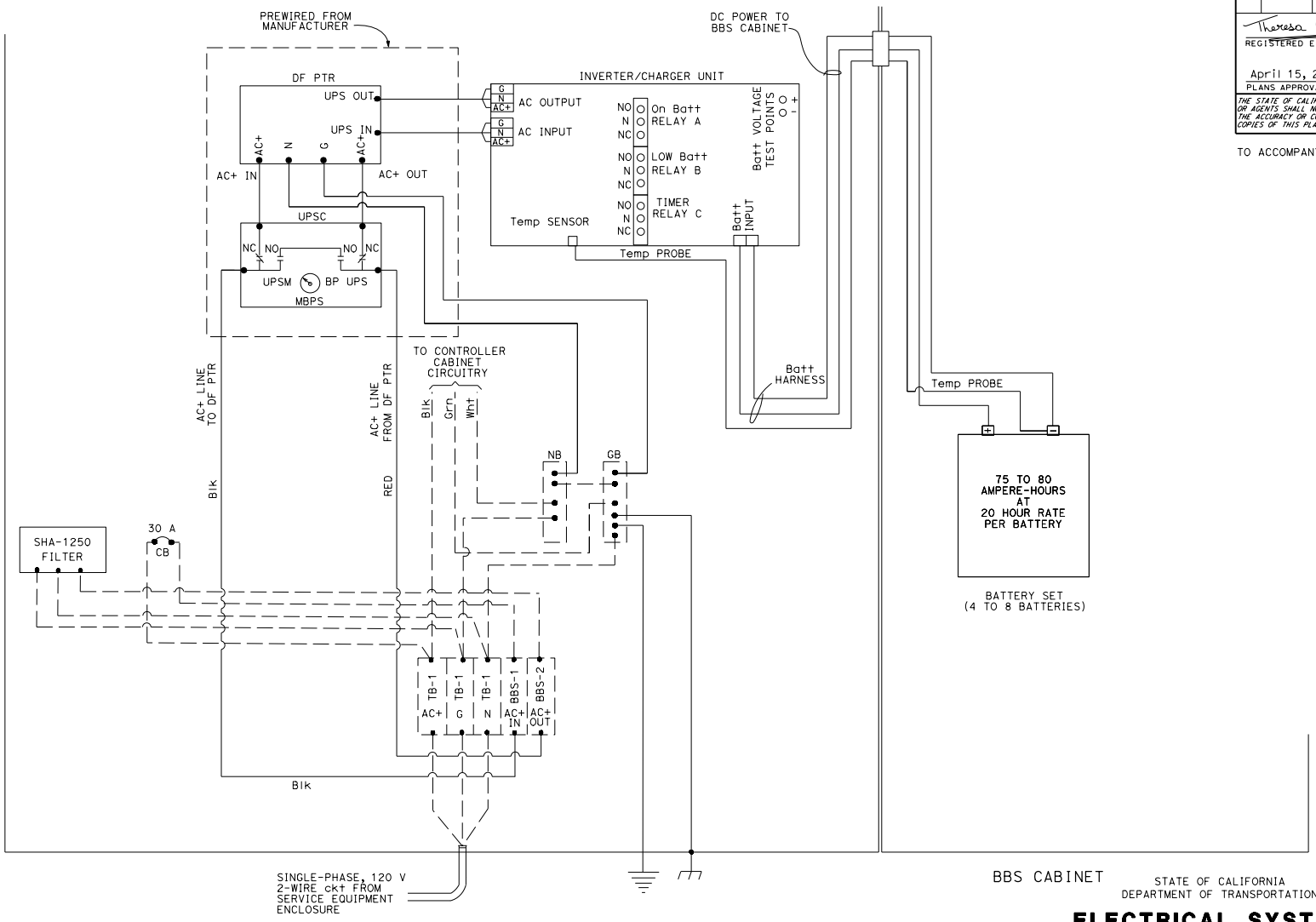

STATE OF CALIFORNIA
DEPARTMENT OF TRANSPORTATION

ELECTRICAL SYSTEMS (ELECTRONICS ASSEMBLY CONNECTION DIAGRAM, WITHOUT BYPASS CONTROL LINE)

NO SCALE

RSP ES-3L DATED APRIL 15, 2016 SUPERSEDES STANDARD PLAN ES-3L
DATED OCTOBER 30, 2015 - PAGE 439 OF THE STANDARD PLANS BOOK DATED 2015.

REVISED STANDARD PLAN RSP ES-3L

2015 REVISED STANDARD PLAN RSP ES-3L

1-12-16

© 2016 California Department of Transportation
All Rights Reserved

Dist	COUNTY	ROUTE	POST MILES TOTAL PROJECT	SHEET No.	TOTAL SHEETS

Theresa Gabriel
REGISTERED ELECTRICAL ENGINEER

April 15, 2016
PLANS APPROVAL DATE

REGISTERED PROFESSIONAL ENGINEER
Theresa Aziz Gabriel
No. E15129
Exp. 6-30-16
ELECTRICAL
STATE OF CALIFORNIA

THE STATE OF CALIFORNIA OR ITS OFFICERS OR AGENTS SHALL NOT BE RESPONSIBLE FOR THE ACCURACY OR COMPLETENESS OF SCANNED COPIES OF THIS PLAN SHEET.

TO ACCOMPANY PLANS DATED _____

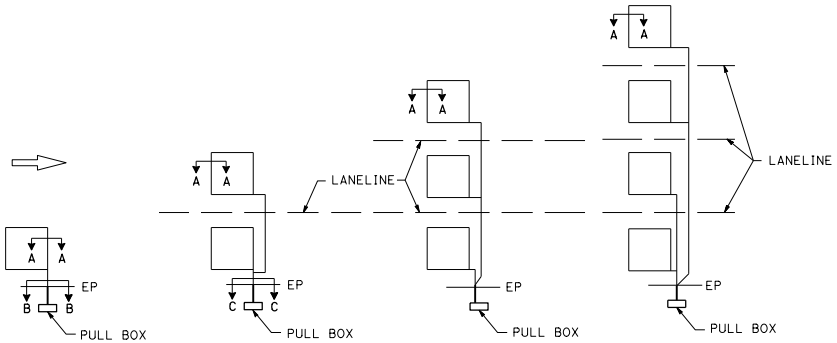

SAW CUT DETAILS

Type A loop detector configurations illustrated

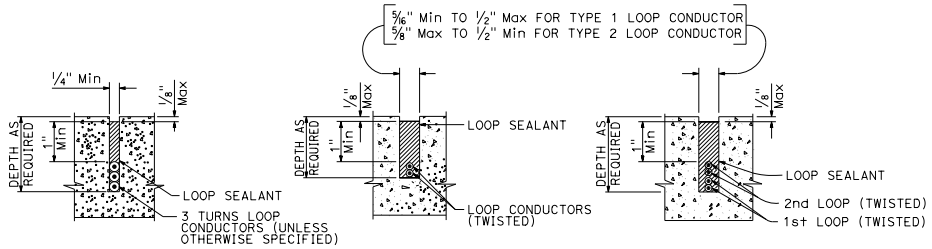

SECTION A-A SECTION B-B SECTION C-C

SLOT DETAILS - TYPE 1 AND TYPE 2 LOOP CONDUCTOR

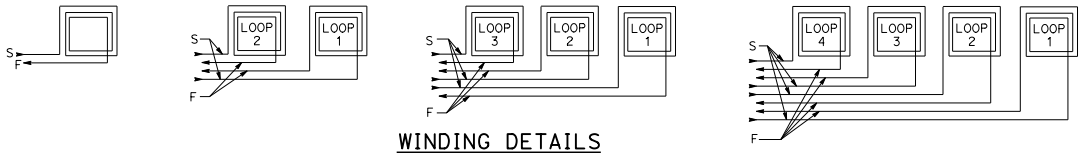

WINDING DETAILS

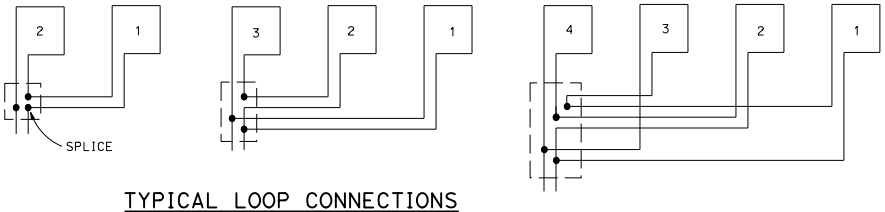

TYPICAL LOOP CONNECTIONS

Dashed lines represent the pull box

ABBREVIATIONS:

S - START
F - FINISH

STATE OF CALIFORNIA
DEPARTMENT OF TRANSPORTATION

ELECTRICAL SYSTEMS (LOOP DETECTORS)

NO SCALE

RSP ES-5A DATED APRIL 15, 2016 SUPERSEDES STANDARD PLAN ES-5A
DATED OCTOBER 30, 2015 - PAGE 445 OF THE STANDARD PLANS BOOK DATED 2015.

REVISED STANDARD PLAN RSP ES-5A

2015 REVISED STANDARD PLAN RSP ES-5A

1-12-16

© 2016 California Department of Transportation
All Rights Reserved

Dist	COUNTY	ROUTE	POST MILES TOTAL PROJECT	SHEET No.	TOTAL SHEETS

Theresa Gabriel
REGISTERED ELECTRICAL ENGINEER

April 15, 2016
PLANS APPROVAL DATE

REGISTERED PROFESSIONAL ENGINEER Theresa Aziz Gabriel No. E15129 Exp. 6-30-16 ELECTRICAL STATE OF CALIFORNIA

THE STATE OF CALIFORNIA OR ITS OFFICERS OR AGENTS SHALL NOT BE RESPONSIBLE FOR THE ACCURACY OR COMPLETENESS OF SCANNED COPIES OF THIS PLAN SHEET.

TO ACCOMPANY PLANS DATED _____

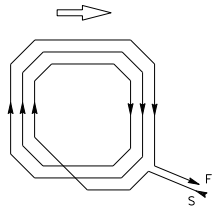

WINDING DETAIL

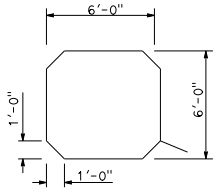

SAW CUT DETAIL

TYPE A LOOP DETECTOR CONFIGURATION

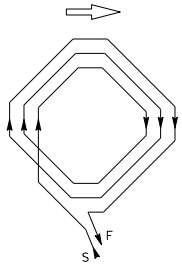

WINDING DETAIL

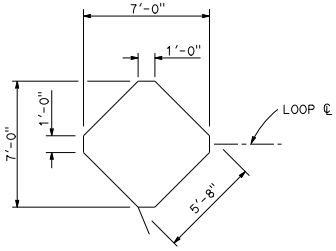

SAW CUT DETAIL

TYPE B LOOP DETECTOR CONFIGURATION

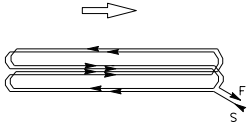

WINDING DETAIL

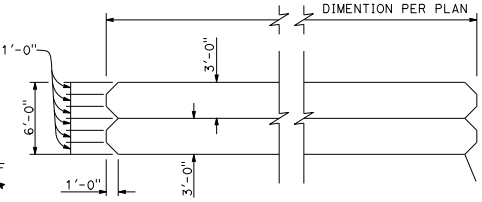

SAW CUT DETAIL

TYPE C LOOP DETECTOR CONFIGURATION

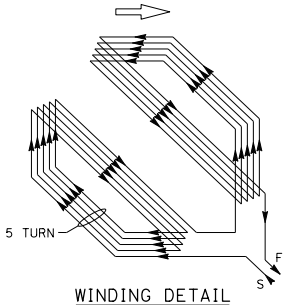

WINDING DETAIL

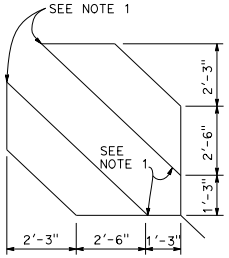

SAW CUT DETAIL

TYPE D LOOP DETECTOR CONFIGURATION

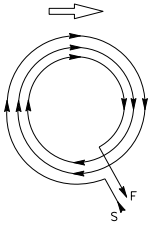

WINDING DETAIL

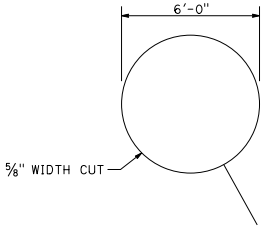

SAW CUT DETAIL

TYPE E LOOP DETECTOR CONFIGURATION

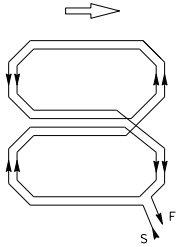

WINDING DETAIL

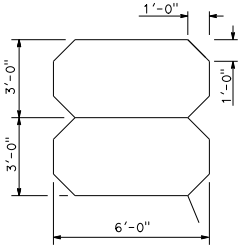

SAW CUT DETAIL

TYPE Q LOOP DETECTOR CONFIGURATION

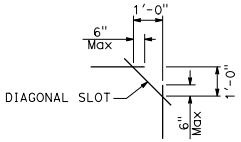

PLAN VIEW OF DIAGONAL SLOT AT CORNERS

NOTES:

1. Round corners of acute angle saw cuts to prevent damage to conductors.
2. Typical distance separating loops from edge to edge is 10' for Type A, B, D and E installation in single lane.
3. Use Type D loops for limit line detection and bicycle lanes.

STATE OF CALIFORNIA
DEPARTMENT OF TRANSPORTATION

ELECTRICAL SYSTEMS (DETECTORS)

NO SCALE

RSP ES-5B DATED APRIL 15, 2016 SUPERSEDES STANDARD PLAN ES-5B
DATED OCTOBER 30, 2015 - PAGE 446 OF THE STANDARD PLANS BOOK DATED 2015.

REVISED STANDARD PLAN RSP ES-5B

2015 REVISED STANDARD PLAN RSP ES-5B

1-22-16

© 2016 California Department of Transportation
All Rights Reserved

Dist	COUNTY	ROUTE	POST MILES TOTAL PROJECT	SHEET No.	TOTAL SHEETS

REGISTERED CIVIL ENGINEER

April 15, 2016
PLANS APPROVAL DATE

REGISTERED PROFESSIONAL ENGINEER Stanley P. Johnson No. C57793 Exp. 3-31-18 CIVIL STATE OF CALIFORNIA

THE STATE OF CALIFORNIA OR ITS OFFICERS OR AGENTS SHALL NOT BE RESPONSIBLE FOR THE ACCURACY OR COMPLETENESS OF SCANNED COPIES OF THIS PLAN SHEET.

TO ACCOMPANY PLANS DATED _____

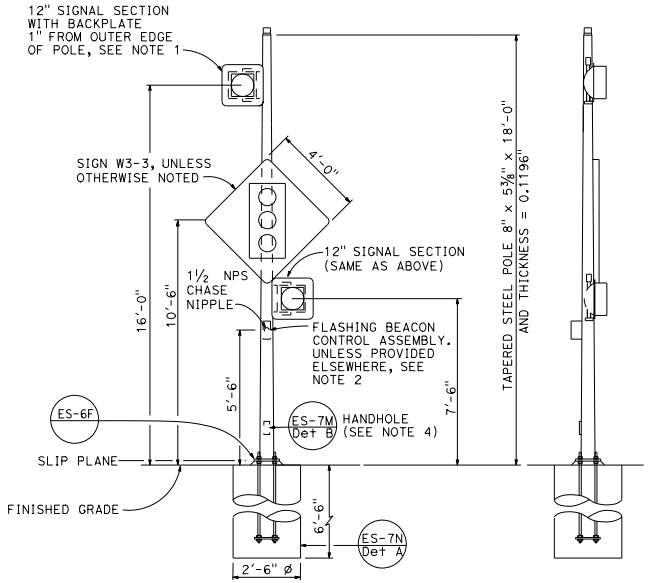

TYPE 15-FBS
FLASHING BEACON WITH SLIP BASE INSTALLATION
DETAIL A

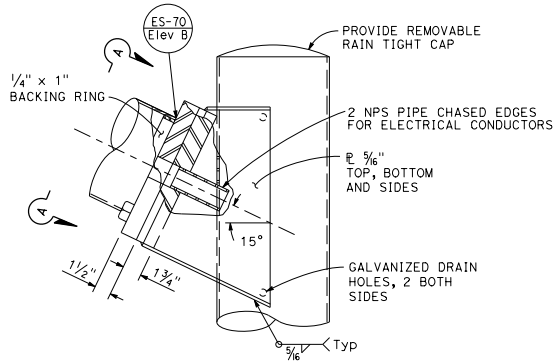

ELEVATION B

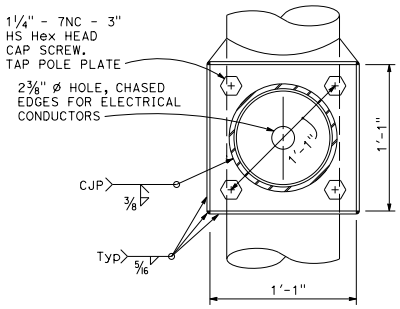

VIEW A-A

FLASHING BEACON MAST ARM CONNECTION DETAIL
DETAIL B

NOTES:

1. See Standard Plan ES-4A and ES-4D for attachment fitting details.
2. For wiring diagram, see Revised Standard Plan RSP ES-14B.
3. For additional notes and details, see Standard Plan ES-7M and Standard Plan ES-7N.
4. Handhole shall be located on the downstream side of traffic.
5. See project plans for type of standard to be installed.

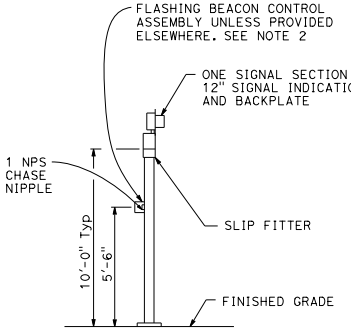

TYPE 1-A, 1-B, 1-C, AND 1-D
FLASHING BEACON INSTALLATION
DETAIL D
See Note 5

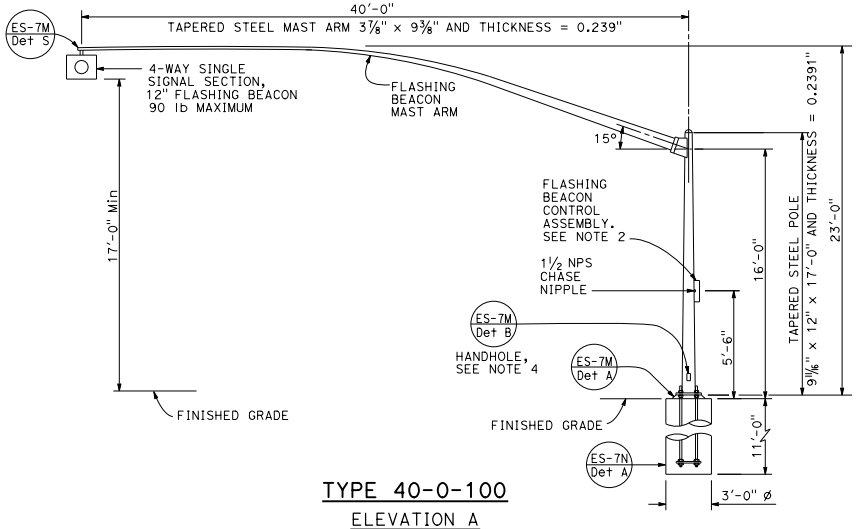

TYPE 40-0-100
ELEVATION A

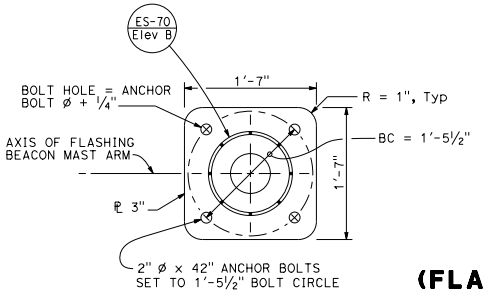

BASE PLATE
DETAIL C

STATE OF CALIFORNIA
DEPARTMENT OF TRANSPORTATION

ELECTRICAL SYSTEMS (FLASHING BEACON ON A TYPE 1, TYPE 15-FBS, AND TYPE 40 STANDARD)

NO SCALE

RSP ES-7J DATED APRIL 15, 2016 SUPERSEDES STANDARD PLAN ES-7J
DATED OCTOBER 30, 2015 - PAGE 464 OF THE STANDARD PLANS BOOK DATED 2015.

REVISED STANDARD PLAN RSP ES-7J

2015 REVISED STANDARD PLAN RSP ES-7J

4-12-16

© 2016 California Department of Transportation
All Rights Reserved

Dist	COUNTY	ROUTE	POST MILES TOTAL PROJECT	SHEET No.	TOTAL SHEETS

REGISTERED CIVIL ENGINEER

April 15, 2016
PLANS APPROVAL DATE

REGISTERED PROFESSIONAL ENGINEER Stanley P. Johnson No. C57793 Exp. 3-31-18 CIVIL STATE OF CALIFORNIA

THE STATE OF CALIFORNIA OR ITS OFFICERS OR AGENTS SHALL NOT BE RESPONSIBLE FOR THE ACCURACY OR COMPLETENESS OF SCANNED COPIES OF THIS PLAN SHEET.

TO ACCOMPANY PLANS DATED _____

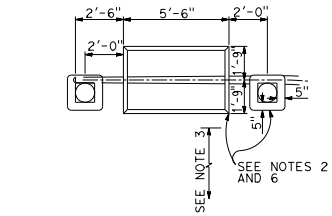

TYPE 9

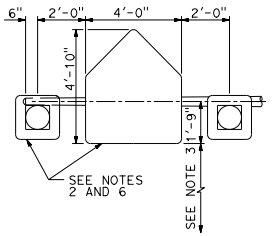

TYPE 9A

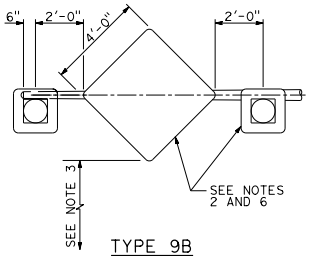

TYPE 9B

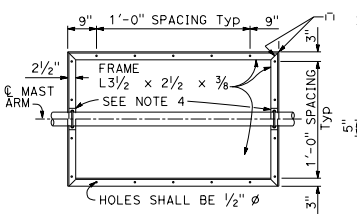

TYPE 9

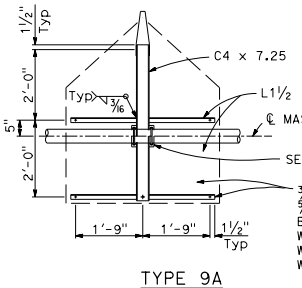

TYPE 9A

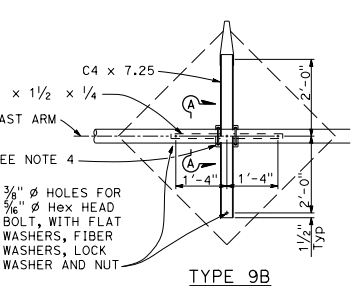

TYPE 9B

FRAME DETAILS
DETAIL A

SECTION A-A

SECTION B-B

TYPE 9B
DETAIL B

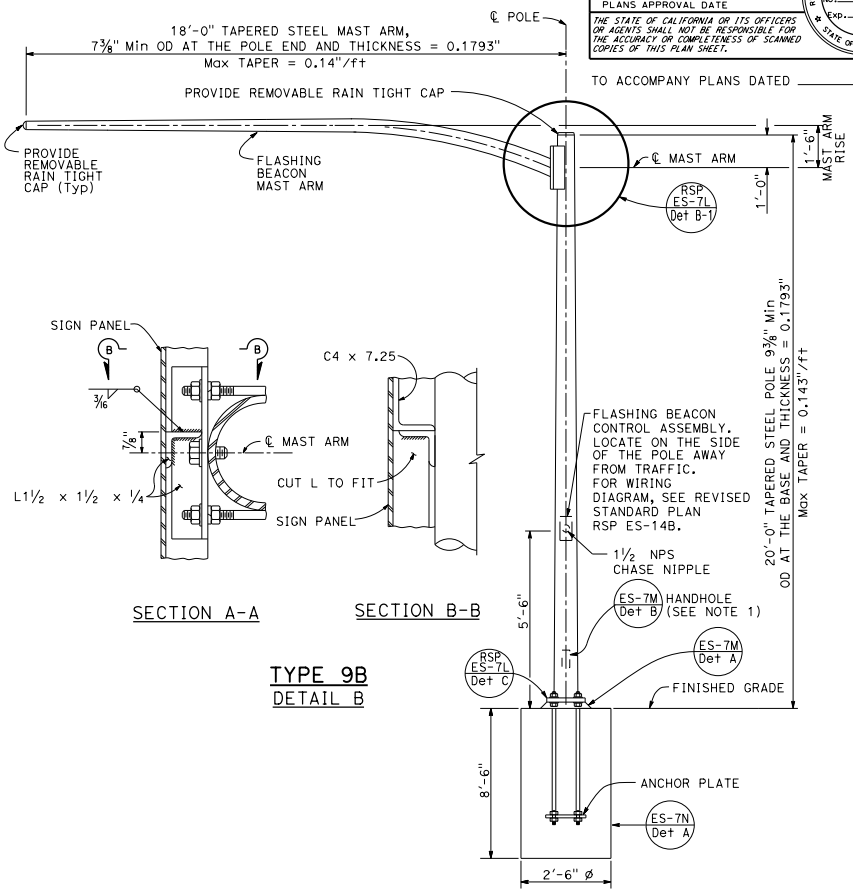

ELEVATION A

NOTES:

1. Handhole shall be located on the downstream side of traffic.
2. Install flashing beacons and sign frame. Flashing beacons shall be MAT mounted on pipe tenon (See Standard Plan ES-7M, Detail S).
3. Vertical clearance shall be 17'-0" minimum between roadway and bottom of signal panel.
4. See Revised Standard Plan RSP ES-7L, Detail B, for sign frame mounting details.
5. For additional notes and details, see Revised Standard Plan RSP ES-7L, Detail B-3.
6. 12" flashing beacon with signal indication, standard visor and 5" x 5" backplate (total 2).

STATE OF CALIFORNIA
DEPARTMENT OF TRANSPORTATION

ELECTRICAL SYSTEMS (FLASHING BEACON WITH TYPE 9, 9A AND 9B SIGN)

NO SCALE

RSP ES-7K DATED APRIL 15, 2016 SUPERSEDES STANDARD PLAN ES-7K
DATED OCTOBER 30, 2015 - PAGE 465 OF THE STANDARD PLANS BOOK DATED 2015.

REVISED STANDARD PLAN RSP ES-7K

2015 REVISED STANDARD PLAN RSP ES-7K

4-12-16

© 2016 California Department of Transportation
All Rights Reserved

Dist	COUNTY	ROUTE	POST MILES TOTAL PROJECT	SHEET No.	TOTAL SHEETS

REGISTERED CIVIL ENGINEER

April 15, 2016
PLANS APPROVAL DATE

REGISTERED PROFESSIONAL ENGINEER
Stanley P. Johnson
No. C57793
Exp. 3-31-18
CIVIL
STATE OF CALIFORNIA

THE STATE OF CALIFORNIA OR ITS OFFICERS OR AGENTS SHALL NOT BE RESPONSIBLE FOR THE ACCURACY OR COMPLETENESS OF SCANNED COPIES OF THIS PLAN SHEET.

TO ACCOMPANY PLANS DATED _____

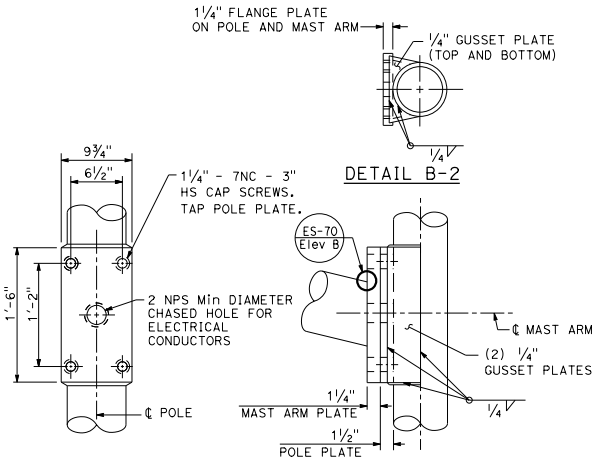

FLASHING BEACON MAST ARM CONNECTION DETAILS

DETAIL B-1

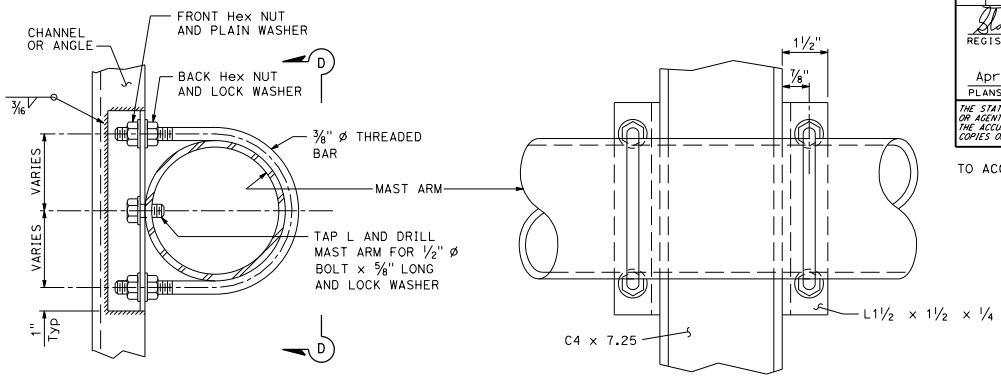

DETAIL B-3

VIEW D-D

NOTE: Tighten front Hex nuts first, then tighten back Hex nuts.

SIGN FRAME MOUNTING DETAILS

All types

DETAIL B

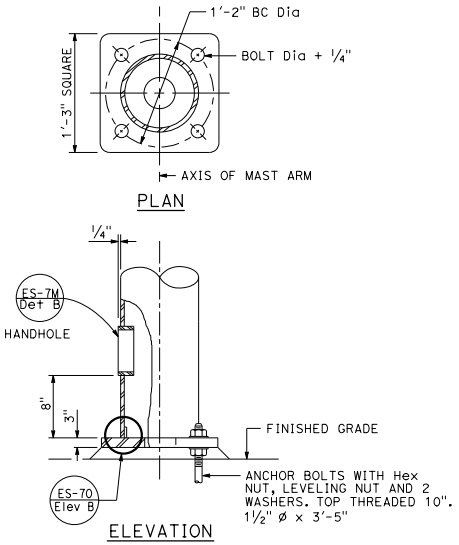

BASE PLATE AND ANCHORAGE DETAIL

DETAIL C

STATE OF CALIFORNIA
DEPARTMENT OF TRANSPORTATION

ELECTRICAL SYSTEMS (FLASHING BEACON WITH TYPE 9, 9A AND 9B SIGN)

NO SCALE

RSP ES-7L DATED APRIL 15, 2016 SUPERSEDES STANDARD PLAN ES-7L
DATED OCTOBER 30, 2015 - PAGE 466 OF THE STANDARD PLANS BOOK DATED 2015.

REVISED STANDARD PLAN RSP ES-7L

2015 REVISED STANDARD PLAN RSP ES-7L

4-12-16

© 2016 California Department of Transportation
All Rights Reserved

Dist	COUNTY	ROUTE	POST MILES TOTAL PROJECT	SHEET No.	TOTAL SHEETS

Theresa Gabriel
REGISTERED ELECTRICAL ENGINEER

April 15, 2016
PLANS APPROVAL DATE

REGISTERED PROFESSIONAL ENGINEER
Theresa Aziz Gabriel
No. E15129
Exp. 6-30-16
ELECTRICAL
STATE OF CALIFORNIA

THE STATE OF CALIFORNIA OR ITS OFFICERS OR AGENTS SHALL NOT BE RESPONSIBLE FOR THE ACCURACY OR COMPLETENESS OF SCANNED COPIES OF THIS PLAN SHEET.

TO ACCOMPANY PLANS DATED _____

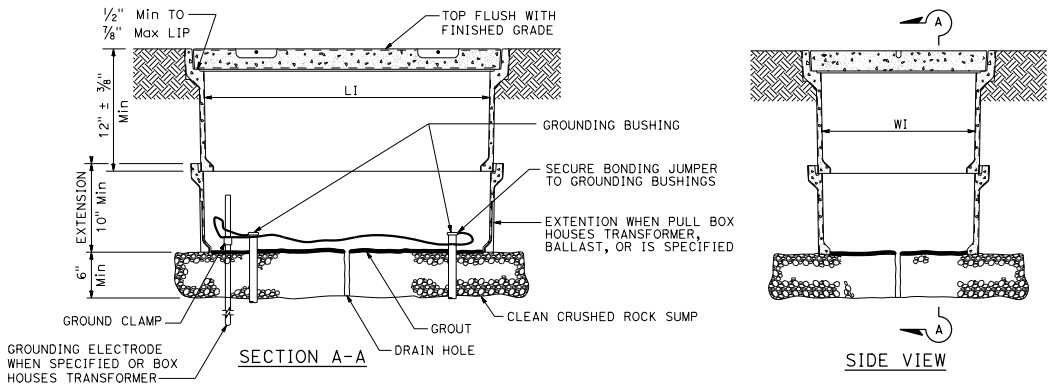

INSTALLATION DETAILS

DETAIL A

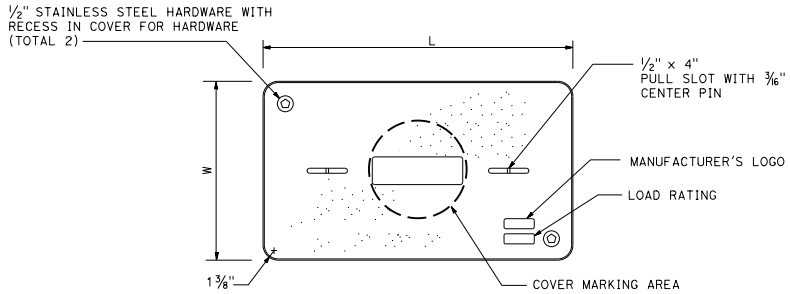

COVER TOP VIEW

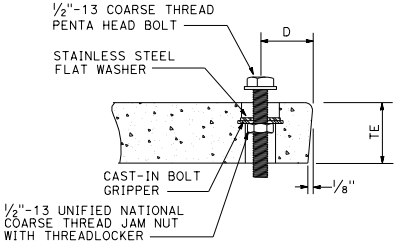

TYPICAL COVER CAPTIVE BOLT

OR SIMILAR

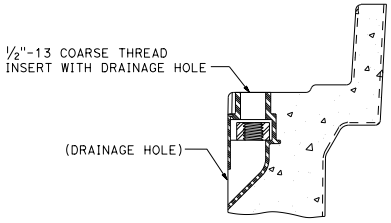

TYPICAL THREADED INSERT

OR SIMILAR

NOTES:

1. The nominal dimensions of the opening in which the cover sets shall be the same as the cover dimensions except the length and width dimensions shall be ⅛" greater.
2. Covers and boxes shall be interchangeable with California standard male and female gages. When interchanged with a standard male or female gage, the top surfaces shall be flush within ⅛". Top outside radius of covers and pull boxes shall have a ⅛" radius.
3. Dimensions for the cover for non-traffic pull box are nominal values.

DIMENSION TABLE

PULL BOX	PULL BOX					COVER				
	MINIMUM DEPTH BOX	MINIMUM DEPTH EXTENSION	MINIMUM WEIGHT	LI Min	WI Min	TE	D	L	W	MINIMUM WEIGHT
No. 3½	12"	N/A	40 lb	1′ - 3"	9"	1¾"	1¾"	1′-3¼" - 1′-3⅜"	10" - 10⅛"	30 lb
No. 5	12"	10"	55 lb	1′ - 8"	11"	2"	1¾"	1′-11¼"	1′-1¾"	60 lb
No. 6	12"	10"	70 lb	2′ - 4¼"	1′ - 3¼"	2"	2"	2′-6½"	1′-5½"	85 lb

STATE OF CALIFORNIA
DEPARTMENT OF TRANSPORTATION

ELECTRICAL SYSTEMS (NON-TRAFFIC PULL BOX)

NO SCALE

RSP ES-8A DATED APRIL 15, 2016 SUPERSEDES STANDARD PLAN ES-8A
DATED OCTOBER 30, 2015 - PAGE 473 OF THE STANDARD PLANS BOOK DATED 2015.

REVISED STANDARD PLAN RSP ES-8A

2015 REVISED STANDARD PLAN RSP ES-8A

1-22-16

© 2016 California Department of Transportation
All Rights Reserved

Dist	COUNTY	ROUTE	POST MILES TOTAL PROJECT	SHEET No.	TOTAL SHEETS

Theresa Gabriel
REGISTERED ELECTRICAL ENGINEER

April 15, 2016
PLANS APPROVAL DATE

REGISTERED PROFESSIONAL ENGINEER
Theresa Aziz Gabriel
No. E15129
Exp. 6-30-16
ELECTRICAL
STATE OF CALIFORNIA

THE STATE OF CALIFORNIA OR ITS OFFICERS OR AGENTS SHALL NOT BE RESPONSIBLE FOR THE ACCURACY OR COMPLETENESS OF SCANNED COPIES OF THIS PLAN SHEET.

TO ACCOMPANY PLANS DATED _____

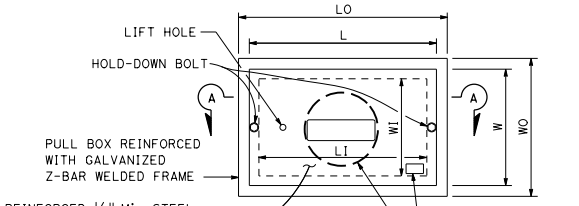

TOP VIEW

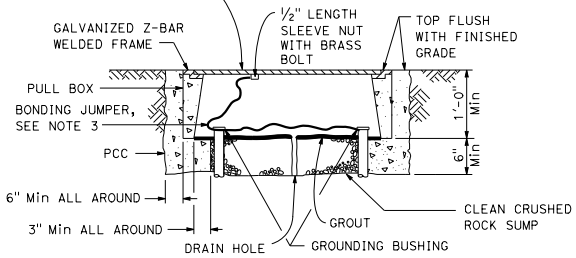

SECTION A-A

No. 3½(T), No. 5(T) AND No. 6(T) TRAFFIC PULL BOX

NOTES:

1. Traffic pull box shall be provided with steel cover and special concrete footing. Steel cover shall have embossed non-skid pattern.
2. Steel reinforcing shall be as regularly used in the standard products of the respective manufacturer.
3. Bonding jumper for metal covers shall be 3' long, minimum.
4. The nominal dimensions of the opening in which the cover sets shall be the same as the cover dimensions except the length and width dimensions shall be 1/8" greater.
5. Covers and boxes shall be interchangeable with California standard male and female gages. When interchanged with a standard male or female gage, the top surfaces shall be flush within 1/8".

DIMENSION TABLE

PULL BOX	PULL BOX						COVER	
	MINIMUM * THICKNESS	MINIMUM DEPTH BOX AND EXTENSION	LO	LI	WO	WI	L **	W **
No. 3½(T)	1½"	1'-0"	1'-10" - 1'-11"	1'-5" - 1'-6½"	1'-3" - 1'-4"	10" - 1'-0"	1'-8" - 1'-8½"	1'-1" - 1'-2"
No. 5(T)	1¾"	1'-0"	2'-5" - 2'-6"	2'-0" - 2'-1"	1'-6" - 1'-7"	1'-1" - 1'-2"	2'-3" - 2'-3½"	1'-4" - 1'-4½"
No. 6(T)	2"	1'-0"	2'-11" - 3'-1"	2'-6" - 2'-7"	1'-10" - 2'-0"	1'-5" - 1'-6"	2'-9" - 2'-9½"	1'-8" - 1'-8½"

* EXCLUDING CONDUIT WEB ** TOP DIMENSION

STATE OF CALIFORNIA
DEPARTMENT OF TRANSPORTATION

ELECTRICAL SYSTEMS (TRAFFIC PULL BOX)

NO SCALE

RSP ES-8B DATED APRIL 15, 2016 SUPERSEDES STANDARD PLAN ES-8B
DATED OCTOBER 30, 2015 - PAGE 474 OF THE STANDARD PLANS BOOK DATED 2015.

REVISED STANDARD PLAN RSP ES-8B

2015 REVISED STANDARD PLAN RSP ES-8B

1-22-16

© 2016 California Department of Transportation
All Rights Reserved

Dist	COUNTY	ROUTE	POST MILES TOTAL PROJECT	SHEET No.	TOTAL SHEETS

Theresa Gabriel
REGISTERED ELECTRICAL ENGINEER

April 15, 2016
PLANS APPROVAL DATE

REGISTERED PROFESSIONAL ENGINEER Theresa Aziz Gabriel No. E15129 Exp. 6-30-16 ELECTRICAL STATE OF CALIFORNIA

THE STATE OF CALIFORNIA OR ITS OFFICERS OR AGENTS SHALL NOT BE RESPONSIBLE FOR THE ACCURACY OR COMPLETENESS OF SCANNED COPIES OF THIS PLAN SHEET.

TO ACCOMPANY PLANS DATED _____

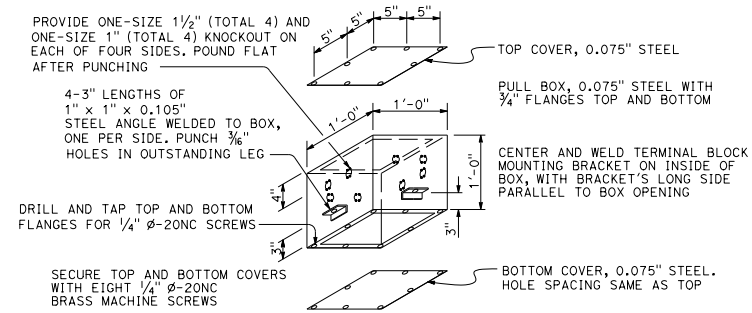

No. 7 PULL BOX (CEILING)

See Note 6

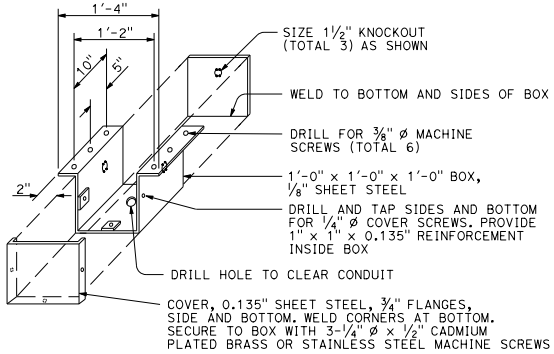

No. 8 PULL BOX

NOTES:

1. Corner joints shall be lapped and secured by spot welding or riveting.
2. Where cap screws are used to attach cover to box, either of the following methods of providing adequate threading may be used:
   a. Tack weld stainless steel Hex nut to bottom of flange (total 4)
   b. Tack weld a ¼" x ⅝" x 8" bar beneath flange (total 2)
3. Pound knockouts flat after punching.
4. Multiple size knockouts (concentric) shall not be permitted.
5. Pull box covers shall be marked as specified.
6. Installation of No. 7 pull box:
   a) Install with bottom flange flush with concrete.
   b) Both covers shall be on a box during pouring.
7. Install box parallel to top of railing. Cover box during pouring with ¼" plywood of sufficient size to provide 1:1 chamfer on 3 sides of cover. Upper edge of plywood shall fit against lower edge of rain tight hood.

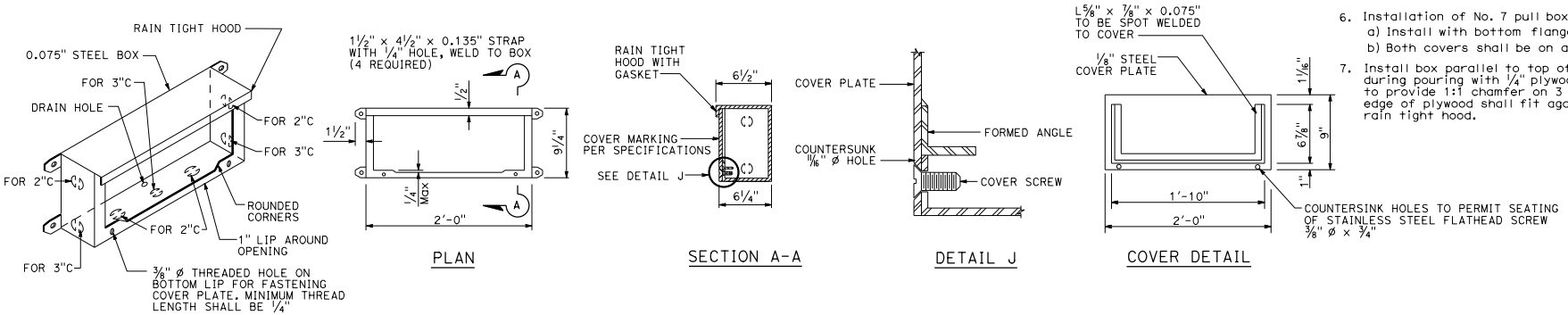

No. 9 PULL BOX (STRUCTURE)

See Note 7

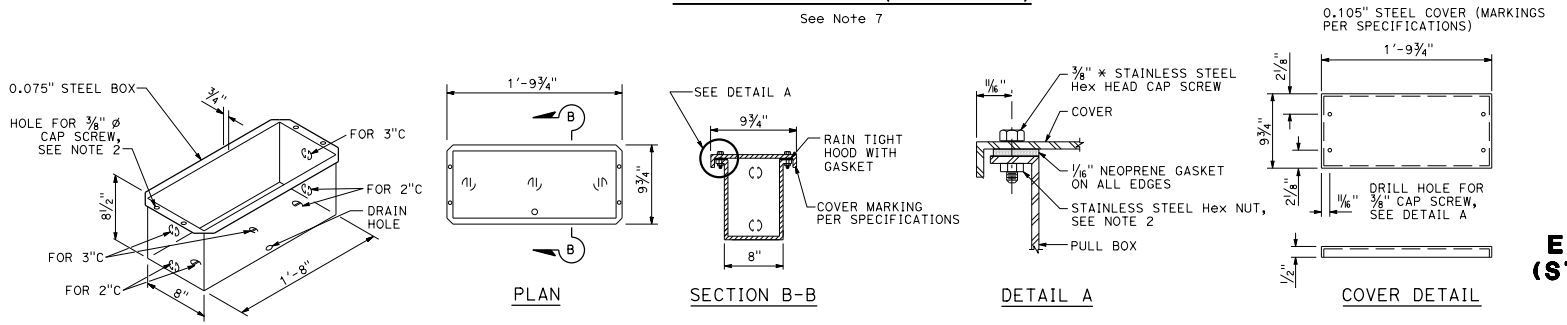

No. 9A PULL BOX (STRUCTURE)

STATE OF CALIFORNIA
DEPARTMENT OF TRANSPORTATION

ELECTRICAL SYSTEMS (STRUCTURE PULL BOX)

NO SCALE

RSP ES-9C DATED APRIL 15, 2016 SUPERSEDES STANDARD PLAN ES-9C DATED OCTOBER 30, 2015 - PAGE 477 OF THE STANDARD PLANS BOOK DATED 2015.

REVISED STANDARD PLAN RSP ES-9C

2015 REVISED STANDARD PLAN RSP ES-9C

1-12-16

© 2016 California Department of Transportation
All Rights Reserved

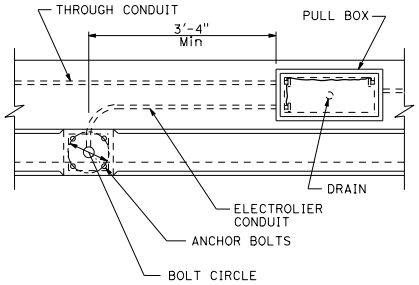

TOP VIEW

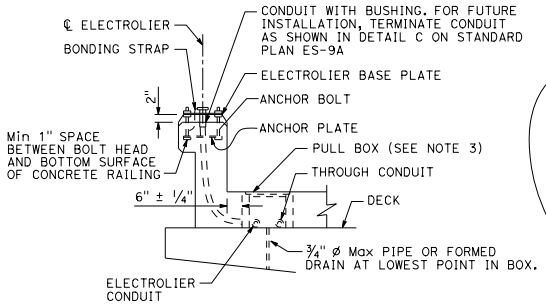

END VIEW

No. 3½, 5, OR 6 PULL BOX INSTALLATION

DETAIL A

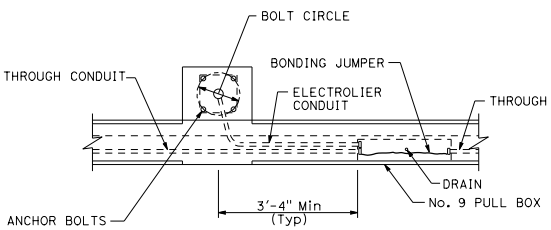

TOP VIEW

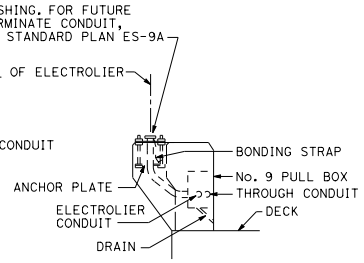

END VIEW

No. 9 PULL BOX INSTALLATION

DETAIL B

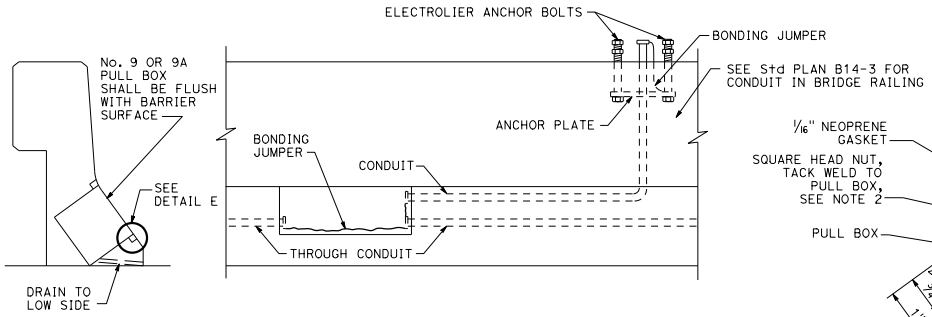

INSTALLATION IN SLOPING PARAPETS

DETAIL D

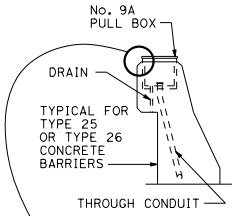

END VIEW

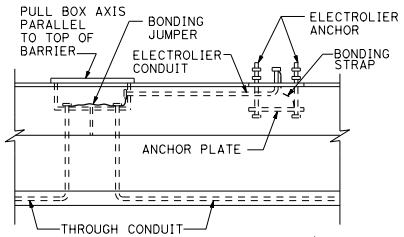

SIDE VIEW

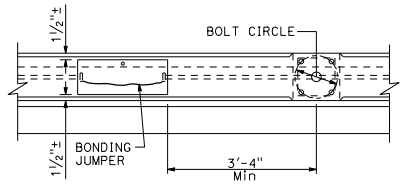

TOP VIEW

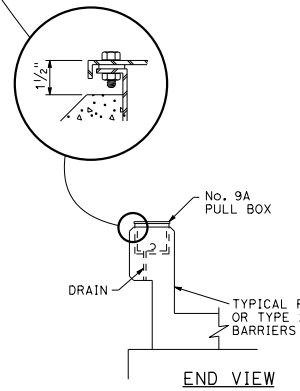

END VIEW

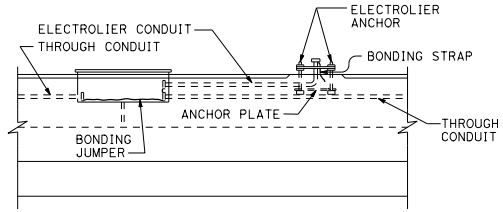

SIDE VIEW

No. 9A PULL BOX INSTALLATION

DETAIL C

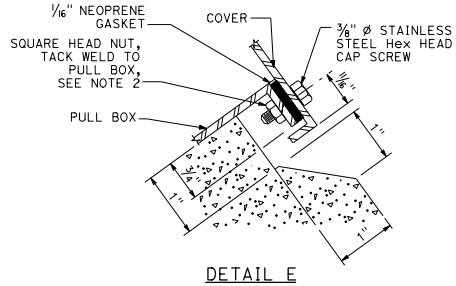

DETAIL E

NOTES:

1. Axis of pull box shall be parallel to top of barrier, sidewalk or railing.
2. See railing sheet for reinforcement and structural details at electroliers and pull boxes.
3. Top of pull boxes in sidewalk areas shall be flush with sidewalk. Modify base of pull box as required.
4. Boxes inside of vertical barrier or railing shall be closed during pouring of PCC with 1/4" plywood of sufficient size to provide 1:1 chamfer on 3 sides of cover. Upper edge of plywood shall fit against lower edge of raintight hood.
5. Use drain in center if box is horizontal, or at low end if box is inclined. When box is mounted in sloping parapet 1/2" elongated drain hole inside at center or near end as required for drainage.
6. For electrolier anchorage bolts and grouting details, see Revised Standard Plan RSP ES-6B.
7. See Standard Plan B14-3 for conduit in concrete barrier.

Dist	COUNTY	ROUTE	POST MILES TOTAL PROJECT	SHEET No.	TOTAL SHEETS

Theresa Gabriel
REGISTERED ELECTRICAL ENGINEER

April 15, 2016
PLANS APPROVAL DATE

REGISTERED PROFESSIONAL ENGINEER Theresa Aziz Gabriel No. E15129 Exp. 6-30-16 ELECTRICAL STATE OF CALIFORNIA

THE STATE OF CALIFORNIA OR ITS OFFICERS OR AGENTS SHALL NOT BE RESPONSIBLE FOR THE ACCURACY OR COMPLETENESS OF SCANNED COPIES OF THIS PLAN SHEET.

TO ACCOMPANY PLANS DATED _____

STATE OF CALIFORNIA
DEPARTMENT OF TRANSPORTATION

ELECTRICAL SYSTEMS (STRUCTURE PULL BOX INSTALLATIONS)

NO SCALE

RSP ES-9D DATED APRIL 15, 2016 SUPERSEDES STANDARD PLAN ES-9D DATED DATED OCTOBER 30, 2015 - PAGE 478 OF THE STANDARD PLANS BOOK DATED 2015.

REVISED STANDARD PLAN RSP ES-9D

2015 REVISED STANDARD PLAN RSP ES-9D

1-22-16

© 2016 California Department of Transportation
All Rights Reserved

Dist	COUNTY	ROUTE	POST MILES TOTAL PROJECT	SHEET No.	TOTAL SHEETS

Theresa Gabriel
REGISTERED ELECTRICAL ENGINEER

April 15, 2016
PLANS APPROVAL DATE

REGISTERED PROFESSIONAL ENGINEER Theresa Aziz Gabriel No. E15129 Exp. 6-30-16 ELECTRICAL STATE OF CALIFORNIA

THE STATE OF CALIFORNIA OR ITS OFFICERS OR AGENTS SHALL NOT BE RESPONSIBLE FOR THE ACCURACY OR COMPLETENESS OF SCANNED COPIES OF THIS PLAN SHEET.

TO ACCOMPANY PLANS DATED _____

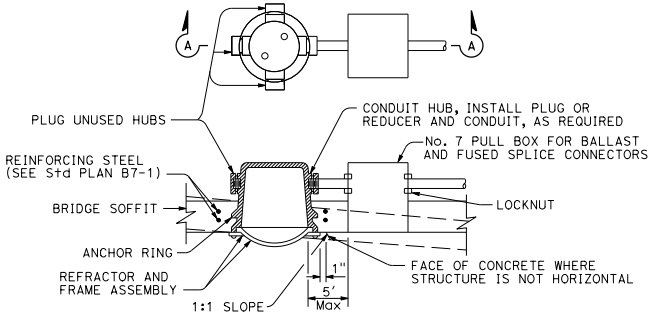

SECTION A-A

FLUSH-MOUNTED SOFFIT LUMINAIRE INSTALLATION

DETAIL F

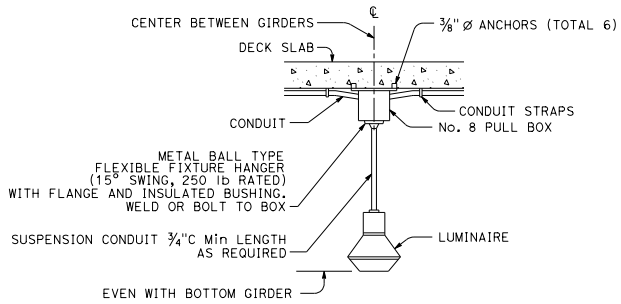

PENDANT SOFFIT LUMINAIRE INSTALLATION

DETAIL P

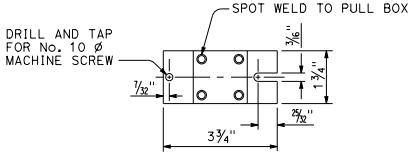

TOP VIEW

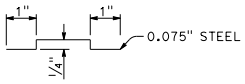

SIDE VIEW

TERMINAL BLOCK MOUNTING BRACKET

DETAIL T

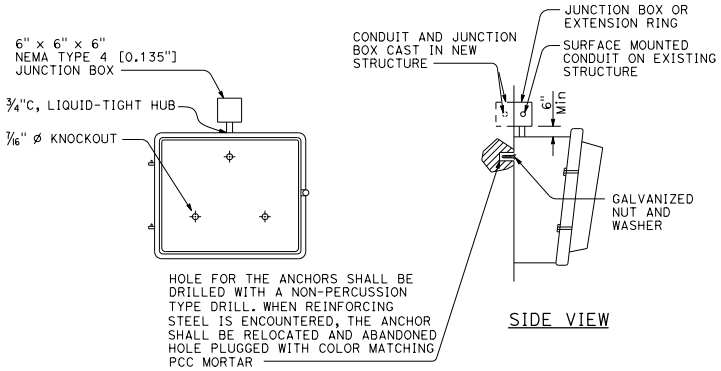

SIDE VIEW

WALL-MOUNTED LUMINAIRE INSTALLATION

DETAIL W

STATE OF CALIFORNIA
DEPARTMENT OF TRANSPORTATION

ELECTRICAL SYSTEMS (FLUSH-MOUNTED SOFFIT, PENDANT SOFFIT AND WALL-MOUNTED LUMINAIRE STRUCTURE INSTALLATIONS)

NO SCALE

RSP ES-9E DATED APRIL 15, 2016 SUPERSEDES STANDARD PLAN ES-9E DATED DATED OCTOBER 30, 2015 - PAGE 479 OF THE STANDARD PLANS BOOK DATED 2015.

REVISED STANDARD PLAN RSP ES-9E

2015 REVISED STANDARD PLAN RSP ES-9E

1-12-16

© 2016 California Department of Transportation
All Rights Reserved

Dist	COUNTY	ROUTE	POST MILES TOTAL PROJECT	SHEET No.	TOTAL SHEETS

Theresa Gabriel
REGISTERED ELECTRICAL ENGINEER

April 15, 2016
PLANS APPROVAL DATE

REGISTERED PROFESSIONAL ENGINEER
Theresa Aziz Gabriel
No. E15129
Exp. 6-30-16
ELECTRICAL
STATE OF CALIFORNIA

THE STATE OF CALIFORNIA OR ITS OFFICERS OR AGENTS SHALL NOT BE RESPONSIBLE FOR THE ACCURACY OR COMPLETENESS OF SCANNED COPIES OF THIS PLAN SHEET.

TO ACCOMPANY PLANS DATED _____

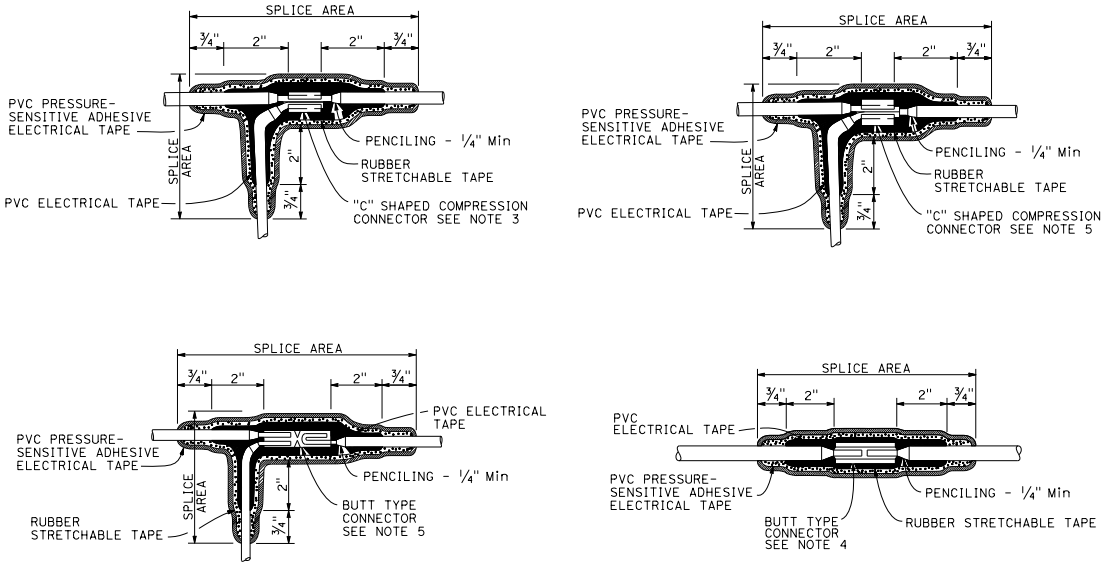

NOTES:

1. Dimensions are minimum.
2. Rubber tapes shall be rolled after application.
3. Between 1 free-end and 1 through conductor.
4. Between 2 free-end conductors.
5. Between 3 free-end conductors.

TYPICAL SPLICE INSULATION METHOD B

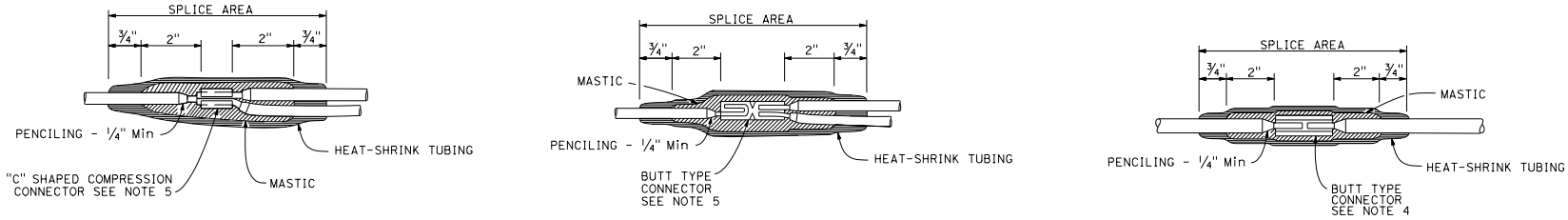

TYPICAL SPLICE INSULATION HEAT-SHRINK TUBING

STATE OF CALIFORNIA
DEPARTMENT OF TRANSPORTATION

ELECTRICAL SYSTEMS
(SPLICE INSULATION METHODS DETAILS)

NO SCALE

RSP ES-13A DATED APRIL 15, 2016 SUPERSEDES STANDARD PLAN ES-13A
DATED OCTOBER 30, 2015 - PAGE 484 OF THE STANDARD PLANS BOOK DATED 2015.

REVISED STANDARD PLAN RSP ES-13A

2015 REVISED STANDARD PLAN RSP ES-13A

12-16-15

© 2016 California Department of Transportation
All Rights Reserved

Dist	COUNTY	ROUTE	POST MILES TOTAL PROJECT	SHEET No.	TOTAL SHEETS

Theresa Gabriel
REGISTERED ELECTRICAL ENGINEER

April 15, 2016
PLANS APPROVAL DATE

REGISTERED PROFESSIONAL ENGINEER Theresa Aziz Gabriel No. E15129 Exp. 6-30-16 ELECTRICAL STATE OF CALIFORNIA

THE STATE OF CALIFORNIA OR ITS OFFICERS OR AGENTS SHALL NOT BE RESPONSIBLE FOR THE ACCURACY OR COMPLETENESS OF SCANNED COPIES OF THIS PLAN SHEET.

TO ACCOMPANY PLANS DATED _____

CIRCUIT VOLTAGE	FUSE VOLTAGE RATING	FUSE CURRENT RATING						
		HPS LAMP BALLAST		LOW PRESSURE SODIUM BALLAST	INDUCTION SIGN LIGHTING	SINGLE PHASE (TWO WIRE) TRANSFORMERS (PRIMARY SIDE)		
		70 W	100 W	180 W	85 W	1 kVA	2 kVA	3 kVA
120 V	250 V	5 A	5 A	5 A	5 A	10 A	20 A	30 A
240 V	250 V	5 A	5 A	5 A	5 A	6 A	10 A	20 A
480 V	500-600 V	5 A	5 A	3 A	1 A (SEE NOTE 2)	3 A	6 A	10 A

NOTES:

1. Primary lines of multiple ballasts shall be provided with fused connectors. Fuse ratings shall be as noted above.
2. See Standard Plan ES-15D, Type SC3 control.

FUSE RATINGS FOR FUSED CONNECTORS

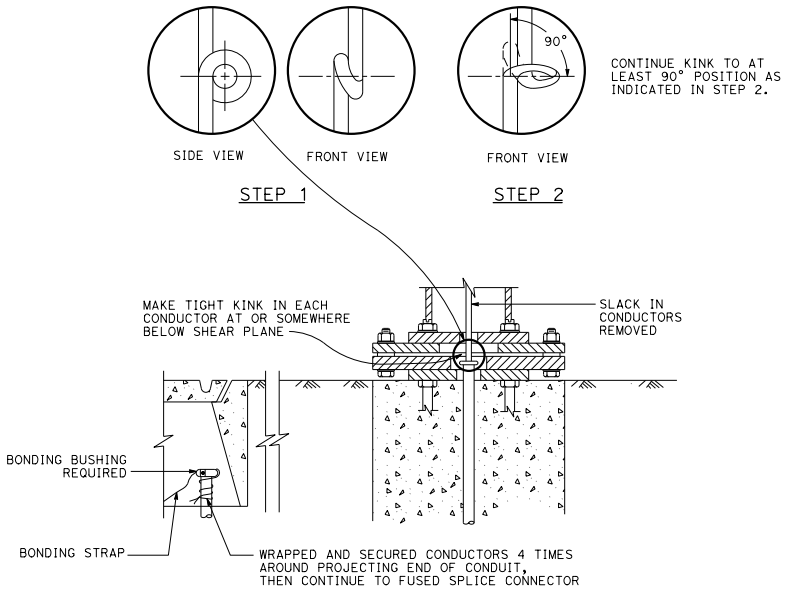

KINKING DETAIL FOR SLIP BASE STANDARDS

DETAIL A

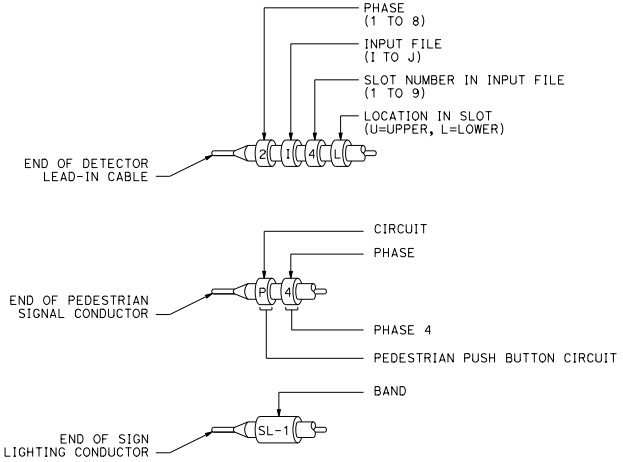

TYPICAL BANDING DETAILS

DETAIL B

STATE OF CALIFORNIA
DEPARTMENT OF TRANSPORTATION

ELECTRICAL SYSTEMS (FUSE RATING, KINKING AND BANDING DETAIL)

NO SCALE

RSP ES-13B DATED APRIL 15, 2016 SUPERSEDES STANDARD PLAN ES-13B DATED OCTOBER 30, 2015 - PAGE 485 OF THE STANDARD PLANS BOOK DATED 2015.

REVISED STANDARD PLAN RSP ES-13B

2015 REVISED STANDARD PLAN RSP ES-13B

1-12-16

© 2016 California Department of Transportation
All Rights Reserved

Dist	COUNTY	ROUTE	POST MILES TOTAL PROJECT	SHEET No.	TOTAL SHEETS

Theresa Gabriel
REGISTERED ELECTRICAL ENGINEER

April 15, 2016
PLANS APPROVAL DATE

REGISTERED PROFESSIONAL ENGINEER
Theresa Aziz Gabriel
No. E15129
Exp. 6-30-16
ELECTRICAL
STATE OF CALIFORNIA

THE STATE OF CALIFORNIA OR ITS OFFICERS OR AGENTS SHALL NOT BE RESPONSIBLE FOR THE ACCURACY OR COMPLETENESS OF SCANNED COPIES OF THIS PLAN SHEET.

TO ACCOMPANY PLANS DATED _____

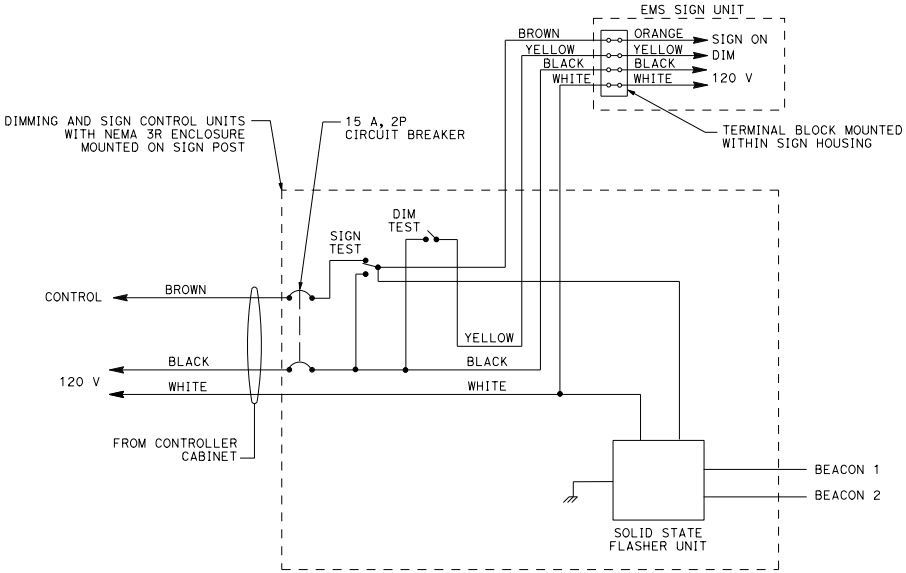

WIRING DIAGRAM
LED EXTINGUISHABLE MESSAGE SIGN
DETAIL A

THE FLASHER SHALL MATE WITH A CINCH-JONES SOCKET S-406-SB OR EQUAL AND CONNECTED AS FOLLOWS:

PIN	CIRCUIT	PIN	CIRCUIT
7	LOAD	10	NEUTRAL
8	LOAD	11	LINE
9	CHASSIS GROUND	12	NOT USED

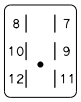

CONNECTOR SOCKET
SOLID STATE FLASHER UNIT

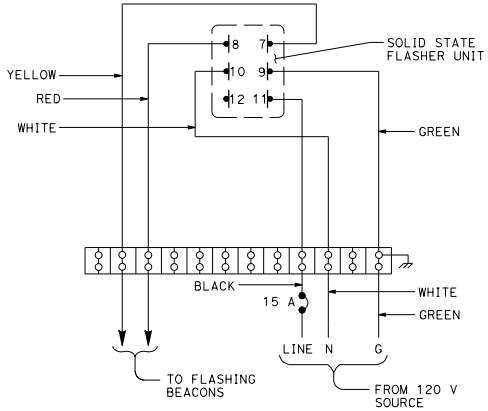

WIRING DIAGRAM
FLASHING BEACON CONTROL ASSEMBLY
DETAIL B

STATE OF CALIFORNIA
DEPARTMENT OF TRANSPORTATION

ELECTRICAL SYSTEMS (CONTROL ASSEMBLY WIRING DIAGRAMS)

NO SCALE

RSP ES-14B DATED APRIL 15, 2016 SUPERSEDES STANDARD PLAN ES-14B
DATED OCTOBER 30, 2015 - PAGE 487 OF THE STANDARD PLANS BOOK DATED 2015.

REVISED STANDARD PLAN RSP ES-14B

2015 REVISED STANDARD PLAN RSP ES-14B

1-22-16

© 2015 California Department of Transportation
All Rights Reserved

Dist	COUNTY	ROUTE	POST MILES TOTAL PROJECT	SHEET No.	TOTAL SHEETS

Theresa Gabriel
REGISTERED ELECTRICAL ENGINEER

October 30, 2015
PLANS APPROVAL DATE

REGISTERED PROFESSIONAL ENGINEER Theresa Aziz Gabriel No. E15129 Exp. 6-30-16 ELECTRICAL STATE OF CALIFORNIA

THE STATE OF CALIFORNIA OR ITS OFFICERS OR AGENTS SHALL NOT BE RESPONSIBLE FOR THE ACCURACY OR COMPLETENESS OF SCANNED COPIES OF THIS PLAN SHEET.

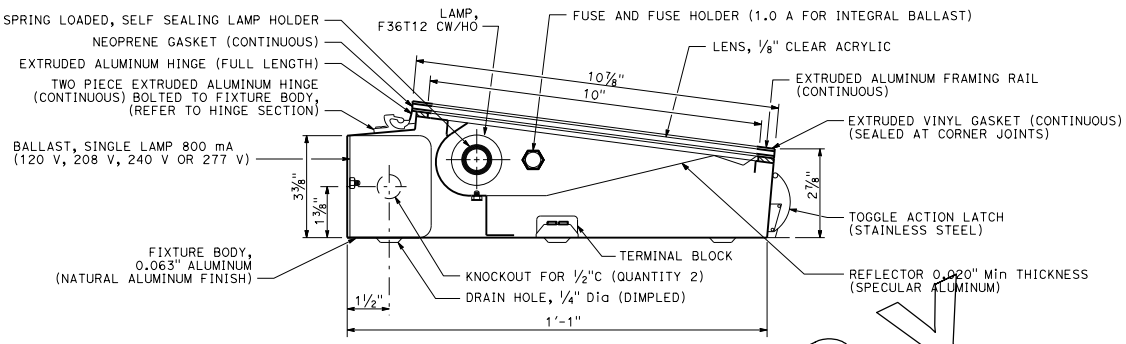

SECTION-LIGHTING FIXTURE

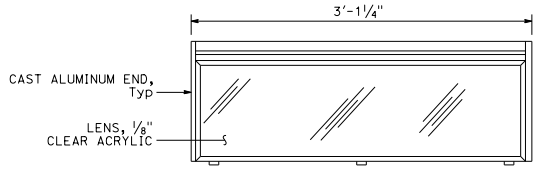

TOP VIEW

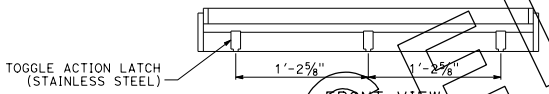

FRONT VIEW

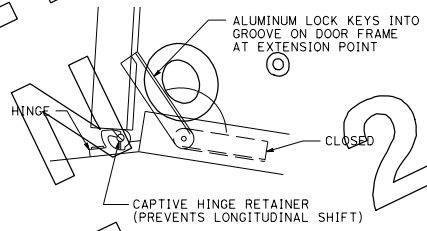

HINGE SECTION

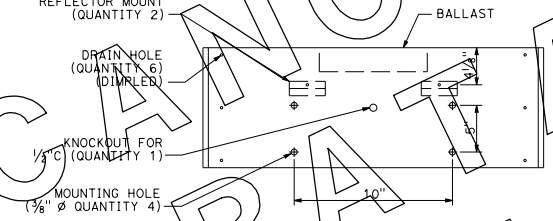

MOUNTING VIEW

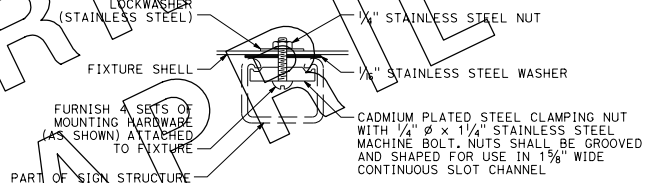

FIXTURE MOUNTING
ON CONTINUOUS SLOT CHANNEL
DETAIL M

SIGN LOAD (WATTS) AND FUSING	
1 LAMP AND BALLAST - 75 W	1 A
2 LAMPS AND BALLAST - 150 W	2.5 A
3 LAMPS AND BALLAST - 225 W	3 A

NOTES:

1. Conduit shall be secured to nearest member using one-hole galvanized mallable iron or steel straps at 5'-0" maximum centers and brass machine screws tapped into the member.
2. Ballasts and terminal boards shall be marked with legible symbols. Conductors shall be tagged and their identification marked on the corresponding terminal on the terminal board as shown on the typical fixture wiring diagram. An alternative cover design shall be submitted for approval.
3. Ballast shall be one, two or three lamp types as required, rated at 800 mA.
4. Each ballast shall be fused with 1 1/4" x 1/4" slow-blow glass tube fuse.
5. Fuseholder shall be a panel mounted type.
6. The fixture shall have an integral ballast.

STATE OF CALIFORNIA
DEPARTMENT OF TRANSPORTATION

ELECTRICAL SYSTEMS (36" FLUORESCENT SIGN ILLUMINATION EQUIPMENT)

NO SCALE

ES-15B

2015 STANDARD PLAN ES-15B

CANCELLED BY ERRATA NO 15-01 APRIL 15, 2016

9-22-15