STATE OF CALIFORNIA
DEPARTMENT OF TRANSPORTATION

STANDARD PLANS
JULY 1999

ERRATUM NO. 99-1

Caltrans

Caltrans Metric

DEPARTMENT OF TRANSPORTATION
ESC/OE
1727 30TH STREET, 2ND FLOOR MS#43
SACRAMENTO, CA 95816

1999 STANDARD PLANS ERRATUM NO. 99-1

TO: All holders of the **July 1999 edition of the Standard Plans Book**

FROM: Engineering Service Center-Division of Office Engineer

SUBJECT: Issuance of Revised and New Standard Plans

DATE: November 8, 2000

The Revised Standard Plans (RSPs) and the New Standard Plan (NSP) included in this booklet contains revisions and additions to the July 1999 edition of the Standard Plans Book and are being issued as Erratum No. 99-1.

Revised Standard Plans (RSPs) are to replace the comparable sheets in the July 1999 edition of the book. The New Standard Plan (NSP) is to supplement the July 1999 edition of the book.

This booklet contains 8-1/2" x 11" copies of the New and Revised Standard Plans issued as Erratum No. 99-1 and a " Digest of Revisions and Additions " that describes the specific plan revisions or additions. This booklet is available through the Caltrans Publications Distribution Unit, 1900 Royal Oaks Drive, Sacramento, California 95815-3800. Telephone (916) 445-3520, Fax (916) 324-8997, WEB site address: http: //caltrans-opac.ca.gov/publicat.htm

This booklet has been prepared with a binding that allows the user the option of retaining the booklet in bound form or removing the individual pages by tearing along the perforated binding.

The following are available for electronic access via the Caltrans OE-ESC Internet WEB site:

- The complete July 1999 Metric Standard Plans book, in PDF file format.
- Each sheet of the July 1999 standard plans and each sheet of the revised and new standard plans issued by Erratum No. 99-1, in DGN, DXF, and PDF file format.

Caltrans OE-ESC Internet WEB site address: http: //www.dot.ca.gov/hq/esc/oe

Caltrans personnel may also access each of the July 1999 standard plan sheets and the revised and new standard plan sheets issued by Erratum No. 99-1, in DGN file format, via the Caltrans Internal Network from the following location: /net/svfms01/doe/ProjectPlans/InHouse/stdplans

Refer any questions regarding the electronic files for the Standard Plans to the ESC-OE Project Plans Unit. E-mail address: Richard_Ford@dot.ca.gov
All other inquiries regarding the Standard Plans should be directed to the Standard Plans Editor. E-mail address: John_Gizinos@dot.ca.gov

November 8, 2000
ESC-OE
JLG

DIGEST OF REVISIONS AND ADDITIONS
ERRATUM NO. 99-1

GENERAL

These Revised Standard Plans (RSPs) are to replace the comparable sheets in the July 1999 edition of the Standard Plans book. The New Standard Plan (NSP) is to supplement the July 1999 edition of the Standard Plans book.

PLAN SPECIFIC

RSP A35A	Revises Note 1 to show the desired spacing of transverse weakened plane joints. Minor editorial changes also have been made.
RSP A35B	Revises the plan view for "Lane /Shoulder Addition and Reconstruction" to require an isolation joint at the longitudinal joint between the existing PCC lane and the adjacent new PCC lane. Adds Section D-D to provide details for the longitudinal isolation joint. Use of the longitudinal isolation joint allows the new PCC lane to be built without matching the spacing of the transverse weakened plane joints in the adjacent existing PCC lane. Revises Note 1 to show the desired spacing of transverse weakened plane joints in new PCC lanes. Replaces the text of Note 2 with new text regarding joint filler material for the longitudinal isolation joint.
NSP A35D	This new plan provides details for retrofitting existing concrete pavement with dowel bars at transverse joints.
RSP A62DA	Revises the textural symbol for loose backfill.
RSP A73C	Revises plan by restoring details for Class 2 Delineators.
RSP A77G	Revises the length of the soil foundation tubes to a standardized length of 1375 mm when used with a soil plate. Revises the size of the wood post that is to be inserted in the soil tube. Raises the height of the rail. Adds Note 5 to provide for the option of using a 1830 mm length soil foundation tube without a soil plate instead of the 1375 mm length soil foundation tube with a soil plate attached.
RSP A77L	Revises the Type SRT Terminal System to require 8 posts instead of 9 posts. Adds Table A and Note 12 to provide post offset dimensions for those locations where site conditions will not accommodate the standard 1220 mm system end offset. Revises the length of the soil foundation tubes to a standardized length of 1375 mm when used with a soil plate. Revises the size of the wood post that is to be inserted in the soil tube. Raises the height of the rail. Revises the bolting of the rail to the posts and blocks. Revises slot guards to show only 6 holes. Revises Note 10 to provide for the use of a 3/4 wrap around terminal section on Wood Post No. 1. Adds Note 11 to provide for the option of using a 1830 mm length soil foundation tube without a soil plate instead of the 1375 mm length soil foundation tube with a soil plate attached.
RSP A77M	Revises the length of the soil foundation tubes to a standardized length of 1375 mm when used with a soil plate. Revises the size of the wood post that is to be inserted in the soil tube. Raises the height of the rail. Adds Note 11 to provide for the option of using a 1830 mm length soil foundation tube without a soil plate instead of the 1375 mm length soil foundation tube with a soil plate attached. Revises the configuration of the Guard Rail Extruder Head to meet the new criteria for the ET 2000 PLUS System.

DIGEST OF REVISIONS AND ADDITIONS
ERRATUM NO. 99-1

RSP A77N	Revises the length of the soil foundation tubes to a standardized length of 1375 mm when used with a soil plate. Revises the size of the wood post that is to be inserted in the soil tube. Raises the height of the rail. Adds Note 13 to provide for the option of using a 1830 mm length soil foundation tube without a soil plate instead of the 1375 mm length soil foundation tube with a soil plate attached.
RSP A82A	Revises the length of the soil foundation tubes to a standardized length of 1375 mm when used with a soil plate. Revises the size of the wood post that is to be inserted in the soil tube. Raises the height of the rail. Adds Note 12 to provide for the option of using a 1830 mm length soil foundation tube without a soil plate instead of the 1375 mm length soil foundation tube with a soil plate attached.
RSP C7C	Revises the dimension line for the 1830-mm width of the Type A Crib Wall.
RSP D72	Revises Section A-A of the Type OL inlet to identify the longitudinal bar reinforcing in the bottom slab of the curb opening portion of the inlet. Revises Note 7 to designate the size of the protection bar to # 19.
RSP D82	Revises the bar reinforcing steel in the "Barrier Section" and the note regarding concrete removal in Detail A of the "Culvert Extension".
RSP D84	Revises the plan to show a minimum of 300 mm from the toe of slope to the top of the wall. Adds a reference to Detail "Y" on the plan view for Type "A" wingwall connection to the box culvert. Revises the detail references to Standard Plan B0-1 for placement of the neoprene strip in Detail "X" and Detail "Y".
RSP D89	Adds Note 5 to require use of cable railing when shown on Project Plans.
RSP T2	Deletes the second sentence of Note 3 that was no longer applicable to the plan. Adds Note 10 to provide reasoning for the use of the approach speeds shown on the plan.
RSP B0-3	Corrects the title of Bridge Detail 3-3.
RSP B3-1	Revises "Spread Footing Section" to show # 16 vertical bars within the exterior stem face as continuous bar projecting into the footing.
RSP B3-2	Adds Note 3 which puts restrictions on bar splicing for "c" and "short c" bars.
RSP B3-3	Adds Note 4 which puts restrictions on bar splicing for "c" and "short c" bars.
RSP B3-4	Adds Note 3 which puts restrictions on bar splicing for "b" and "short b", bars.
RSP B3-5	Adds to the Note at the bottom of the plan regarding the restriction of other bar splicing.
RSP B3-6	Adds to the Note at the bottom of the plan regarding the restriction of other bar splicing.
RSP B3-7	Adds to the Note under "Spread Footing Section", which puts restrictions on bar splicing for "a" and "short a" bars.
RSP B3-8	Corrects the surcharge factors for Case I and Case III design loading.
RSP B3-11	Adds Notes 6 and 7 regarding restrictions on bar splicing.
RSP B11-53	Adds a dimension to the vertical stirrup bar reinforcing steel shown on the "Type 25 Barrier" detail.
RSP B11-55	Revises the plan and elevation view of the electrolier connection to the barrier. Adds elevation and sectional details of the electrolier pedestal. Adds bar reinforcing steel to the sectional detail of the Type 732A Barrier. Adds Note H to the plan. Adds a dimension to the stirrup bar reinforcing steel shown on the "Type 732 Barrier" detail.

DIGEST OF REVISIONS AND ADDITIONS
ERRATUM NO. 99-1

RSP B11-56	Revises the plan and elevation view of the electrolier connection to the barrier. Adds elevation and sectional details of the electrolier pedestal. Adds bar reinforcing steel to the sectional detail of the Type 736A Barrier. Adds Note H to the plan. Adds a dimension to the stirrup bar reinforcing steel shown on the "Type 736 Barrier" detail
RSP S1	Revises the reference for "Mercury Sign Lighting Equipment Details" to Standard Plan ES-15A and for "Sign Lighting Equipment Details" to Standard Plan ES-15C.
RSP S2	Revises the reference for details of the coupling or chase nipple in the post in the elevation view to Standard Plan ES-15C. Revises the weld information in Detail 7 and the size of the backing ring shown in the "Elevation" view. Adds a note to the Type V, Type VI and Type VII "Typical Base Plate" details regarding the double side and single side bolts.
RSP S3	Revises the information shown in "Table XIV". Revises the weld information in Section A-A and in Detail 8. Revises the "Anchorage Details" and the "Typical Base Plate" details. Revises the plan sheet reference for details of the coupling or chase nipple in the post in the elevation view to Standard Plan ES-15C.
RSP S5	Revises entries in "Table XII" and "Table XI" and revises the vertical bracing shown in the "Plan View".
RSP S6	Revises entries in "Bolted Chord Splice" table. Revises the diagonal bracing for two-post signs shown in the "Typical Section J-J" detail.
RSP S7	Revise the details for the "Upper Chord Connection to Post" and the "Lower Chord Connection to Post".
RSP S8A	Revises the welds shown in "Detail 9".
RSP S8C	Revises the dimensions of the mounting beam shown in Section B-B and the diameter of the holes shown in the "Chord Angle Clamp Detail".
RSP S11	Revises the "Center Post" details and bar dimensions for the "End Post" and "Two Post" details of the "Hinge Plan". Adds details for "Typical Bolted (Alternative) Hinge Connection". Revises several dimensions shown in Section C-C. Deletes Note 2 and renumbers Note 3 to Note 2.
RSP S13	Revises the information shown in the table. Revises the details shown in the elevation view of the foundation and Sections A-A and B-B. Corrects the lateral pressure shown in Note 8.
RSP S17	Revises the weld information in Section E-E.
RSP S20A	Revises the reference for details of the chase nipple in the post in the elevation view to Standard Plan ES-15C. Revises the "Plan View" of the base plate for the 6 NPS through 8 NPS posts. Adds a traffic direction arrow to base plate details. Adds a detail for "Single Side Bolt". Adds gussets to the "Anchorage Bolt Detail".
RSP S20B	Revises the bar reinforcing clearance in Section J-J. Revises the "Elevation View" of The "Spread Footing Detail" to show gussets on the post and the bar reinforcing clearance in the footing.
RSP S39	Revises the bar reinforcing clearance in Section B-B.
RSP S40J	Revises the reference for details of the chase nipple in the post to Standard Plan ES-15C.
RSP S40M	Revises the reference for details of the chase nipple in the post in the elevation view to Standard Plan ES-15C.

DIGEST OF REVISIONS AND ADDITIONS
ERRATUM NO. 99-1

RSP S40Q	Revises Note 9 to make the reference to Standard Plan ES-15C for details of the chase nipple in the post. Revises the size of the strip used for the back up weld in the "Post Split" detail.
RSP S40S	Deletes the reference to "AWS D 1.1 Section 3.2.2" regarding roughness of the edges of the handhole shown in the plan view of the "Typical Details of Handhole and Cover".
RSP S40T	Revises the weld information in Detail 7.
RSP S40U	Deletes the "CIDH Pile Foundation" details and revises the bar reinforcing clearance in Sections A-A and B-B.
RSP ES-6A	Revises the dimensions for Post Type 15 in the "Base Plate Data" table. Adds a detail for Type 15 and Type 22 Lighting Standards mounted on Type 732 or Type 736 barrier.
RSP ES-6B	Revises the dimensions of the bolt circle for Post Type 15 in "Table BC".
RSP ES-6C	Revises the description of the high strength bolt shown in the "Elevation View" of the "Slip Base Plate Insert Details".
RSP ES-6F	Deletes the "Non-Slip Base Detail" and revises Note 4 in regards to fixed bases. Revises the thickness dimensions of the base plate and slip base plate.
RSP ES-6J	Revises the "Base Plate Data" in the table.
RSP ES-7C	Revises the plan title description of the "Arm Lengths" to 4.6 m to 9.1 m.
RSP ES-7D	Revises the plan title description of the "Arm Lengths" to 4.6 m to 9.1 m. Revises the "Base Plate Data" for Post Type 16-2-129.
RSP ES-7E	Revises the plan title description of the "Arm Lengths" to 4.6 m to 9.1 m. Revises the "Base Plate Data" for Post Type 17-3-129.
RSP ES-16C	Revises the information in the "Weld Detail". Includes minor editorial revisions.

NOTES

1. Transverse weakened plane joints shall be constructed in new portland cement concrete pavement on the skewed offset, as shown, and spaced at successive repeated intervals of 3.6 m, 4.6 m, 4.0 m and 4.3 m, except for the first joint at pavement end anchors and structure approaches. The skewed offset shall be 1 to 6 and rotated counter clockwise.
2. New transverse weakened plane joints shall match the skewed offset and spacing of the adjacent existing weakened plane joints, as shown. Where the existing transverse weakened plane joint spacing exceeds 4.6 m, an additional transverse weakened plane joint shall be constructed equal distance bewteen the existing joints.
3. Transverse contact (construction) joints, with tie bars spaced as shown, shall be installed at the end of paving operations and elsewhere if ordered by the Engineer. Transverse contact (construction) joints shall be placed at least 1.5 m from any weakened plane joint.
4. Construct longitudinal weakened plane joints as shown in Section B-B when more than one lane or shoulder widths are placed at one time. If constructing one lane at a time, use longitudinal contact (construction) joint, as shown in Section A-A.
5. If fresh portland cement concrete is placed adjacent to existing portland cement concrete, the top corner of the existing portland cement concrete does not need to be rounded to 6 mm radius, as shown.

To accompany plans dated .....

Caltrans Metric

DIST	COUNTY	ROUTE	KILOMETER POST TOTAL PROJECT	SHEET NO.	TOTAL SHEETS

Kevin M. Hewitt
REGISTERED CIVIL ENGINEER

October 26, 2000
PLANS APPROVAL DATE

REGISTERED PROFESSIONAL ENGINEER Kevin M. Hewitt No. C36577 Exp. 6-30-04 CIVIL STATE OF CALIFORNIA

The State of California or its officers or agents shall not be responsible for the accuracy or completeness of electronic copies of this plan sheet.

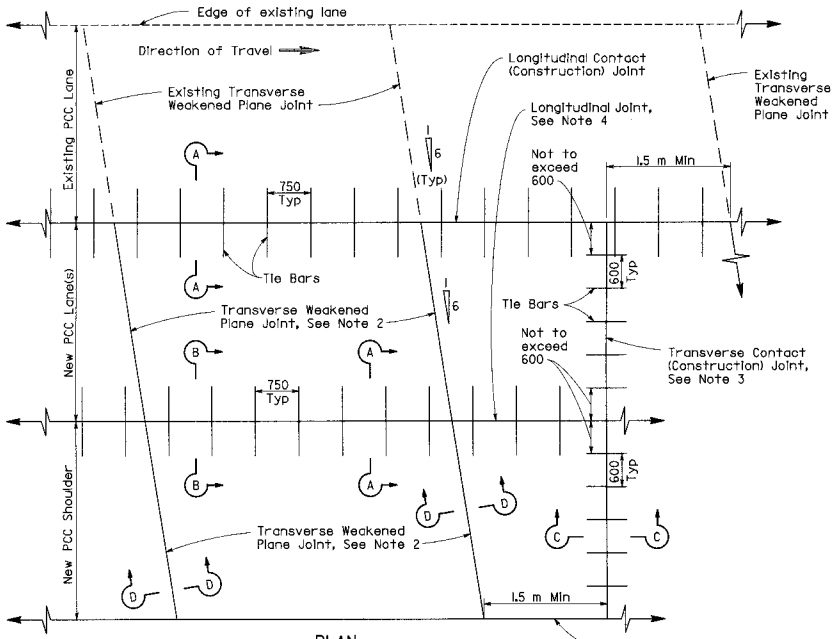

PLAN
LANE/SHOULDER ADDITION OR RECONSTRUCTION

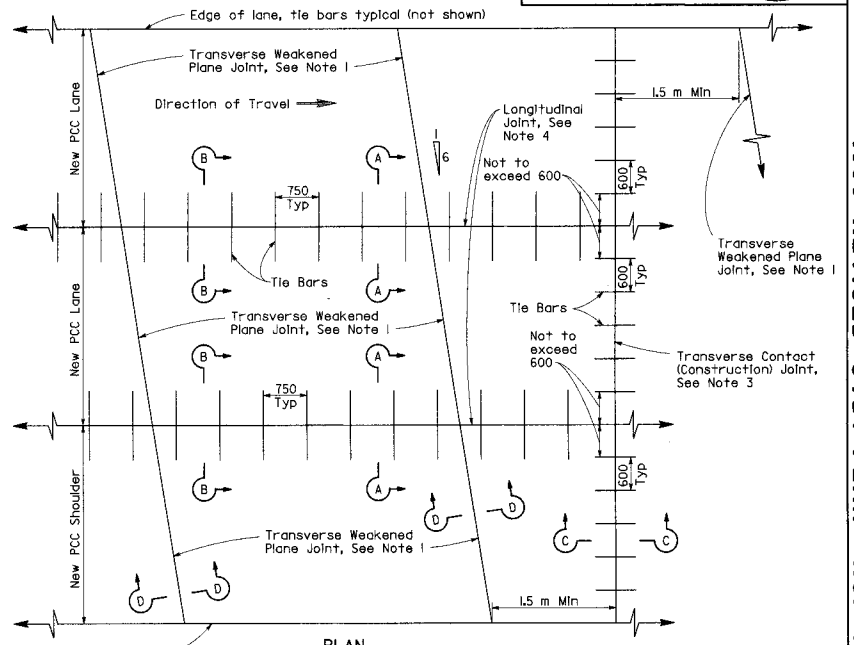

PLAN
NEW CONSTRUCTION

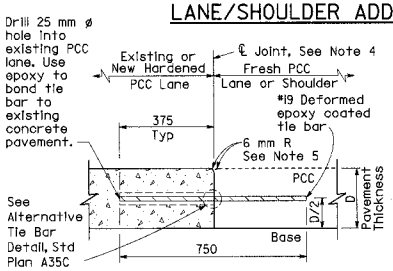

SECTION A-A, TIE BAR DETAIL
LONGITUDINAL CONTACT (CONSTRUCTION) JOINT

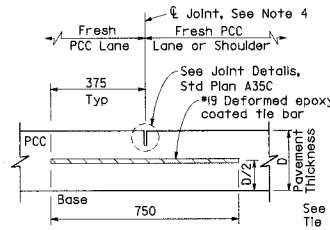

SECTION B-B, TIE BAR DETAIL
LONGITUDINAL WEAKENED PLANE JOINT

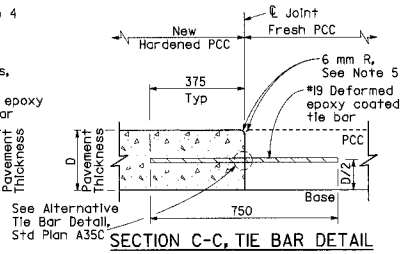

SECTION C-C, TIE BAR DETAIL
TRANSVERSE CONTACT (CONSTRUCTION) JOINT

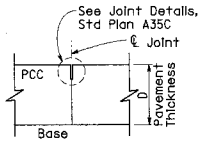

SECTION D-D
TRANSVERSE WEAKENED PLANE JOINT

STATE OF CALIFORNIA
DEPARTMENT OF TRANSPORTATION

PORTLAND CEMENT CONCRETE PAVEMENT (UNDOWELED TRANSVERSE JOINTS)

NO SCALE

ALL DIMENSIONS ARE IN MILLIMETERS UNLESS OTHERWISE SHOWN

RSP A35A DATED OCTOBER 26, 2000 SUPERSEDES STANDARD PLAN A35A DATED JULY 1, 1999-PAGE 12 OF THE STANDARD PLANS BOOK DATED JULY 1999.

REVISED STANDARD PLAN RSP A35A

1999 REVISED STD. PLAN RSP A35A

NOTES

1. Transverse weakened plane joints shall be constructed at right angles to the centerline or to the longitudinal pavement joints in new portland cement concrete pavement and spaced at successive repeated intervals of 3.6 m, 4.6 m, 4.0 m and 4.3 m.
2. Where Lean Concrete Base is not used as base material, as shown in Section D-D, the joint filler material shall only extend to the bottom of the new portland cement concrete slab.
3. 38 mm ø smooth epoxy coated dowels are to be used with a pavement thickness, D, equal to or greater than 215 mm. For a pavement thickness, D, less than 215 mm, use 32 mm ø smooth epoxy coated dowels.
4. Dowels shall be placed in the transverse weakened plane joints in portland cement concrete shoulders unless otherwise specified in the Special Provisions.
5. Construct longitudinal weakened plane joints as shown in Section C-C when more than one lane or shoulder widths are placed at one time. If constructing one lane at a time, use longitudinal contact (construction) joint, as shown in Section B-B.
6. Transverse contact (construction) joints shall be installed at the end of all paving operations, and elsewhere if ordered by the Engineer. The location of the joint shall coincide with the successive interval spacing of transverse weakened plane joints when terminating paving operations.
7. If fresh portland cement concrete is placed adjacent to existing portland cement concrete, the top corner of the existing portland cement concrete does not need to be rounded to the 6 mm radius, as shown.

Caltrans Metric

DIST	COUNTY	ROUTE	KILOMETER POST TOTAL PROJECT	SHEET NO.	TOTAL SHEETS

REGISTERED CIVIL ENGINEER

October 26, 2000
PLANS APPROVAL DATE

REGISTERED PROFESSIONAL ENGINEER Kevin W. Harrith No. C36517 Exp. 6-30-04 CIVIL STATE OF CALIFORNIA

The State of California or its officers or agents shall not be responsible for the accuracy or completeness of electronic copies of this plan sheet.

To accompany plans dated _____

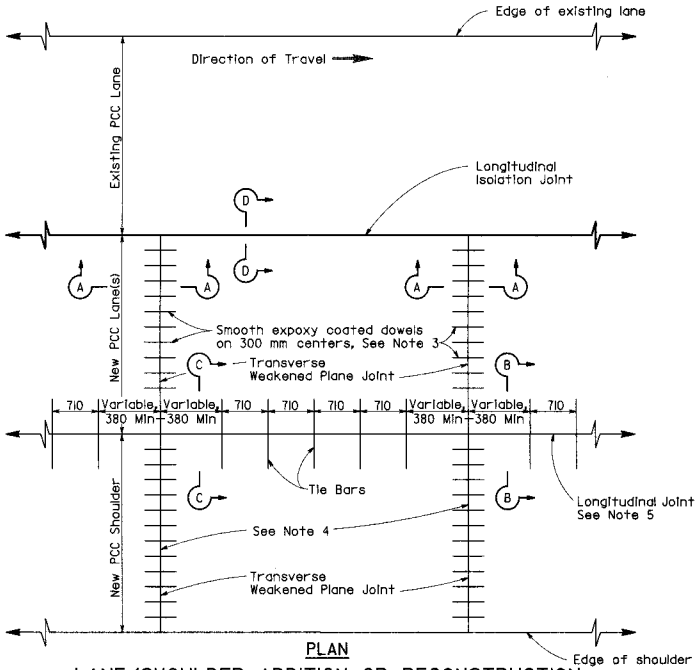

PLAN
LANE/SHOULDER ADDITION OR RECONSTRUCTION

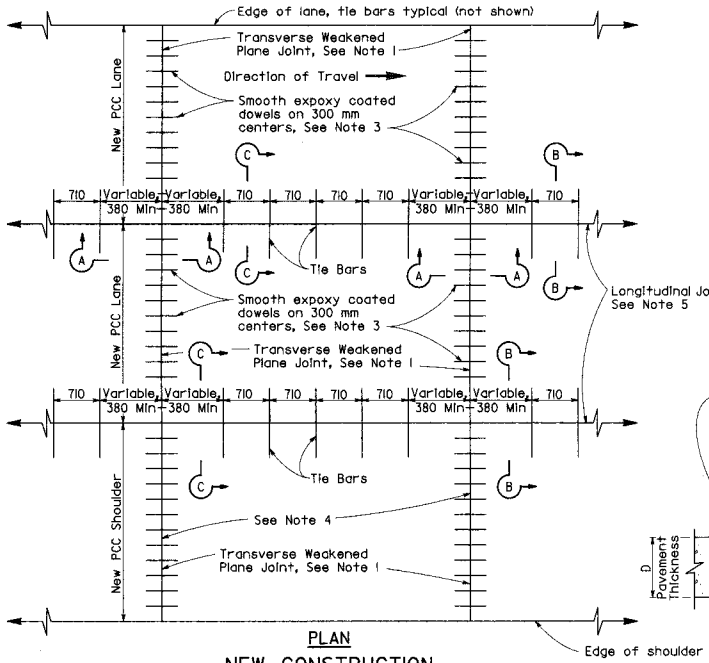

PLAN
NEW CONSTRUCTION

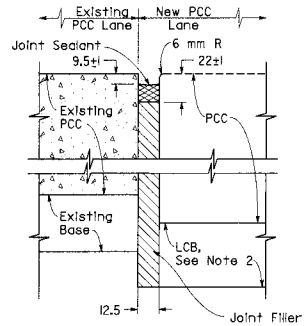

SECTION D-D
LONGITUDINAL ISOLATION JOINT

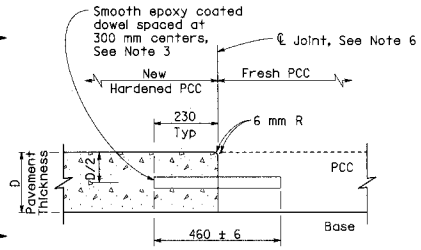

TRANSVERSE CONTACT (CONSTRUCTION) JOINT DETAIL

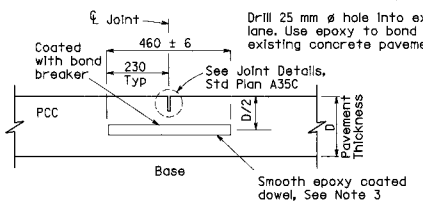

SECTION A-A, DOWEL DETAIL
TRANSVERSE WEAKENED PLANE JOINT

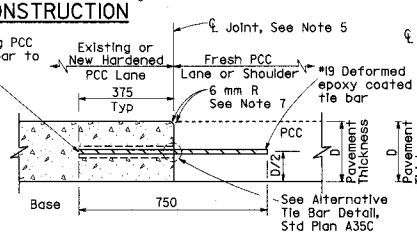

SECTION B-B, TIE BAR DETAIL
LONGITUDINAL CONTACT (CONSTRUCTION) JOINT

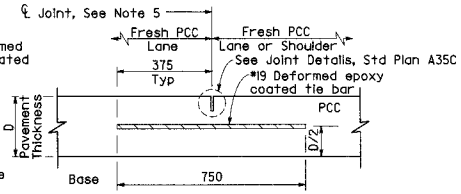

SECTION C-C, TIE BAR DETAIL
LONGITUDINAL WEAKENED PLANE JOINT

STATE OF CALIFORNIA
DEPARTMENT OF TRANSPORTATION

PORTLAND CEMENT CONCRETE PAVEMENT (DOWELED TRANSVERSE JOINTS)

NO SCALE

ALL DIMENSIONS ARE IN MILLIMETERS UNLESS OTHERWISE SHOWN

RSP A35B DATED OCTOBER 26, 2000 SUPERSEDES STANDARD PLAN A35B DATED JULY 1, 1999-PAGE 13 OF THE STANDARD PLANS BOOK DATED JULY 1999.

REVISED STANDARD PLAN RSP A35B

1999 REVISED STD. PLAN RSP A35B

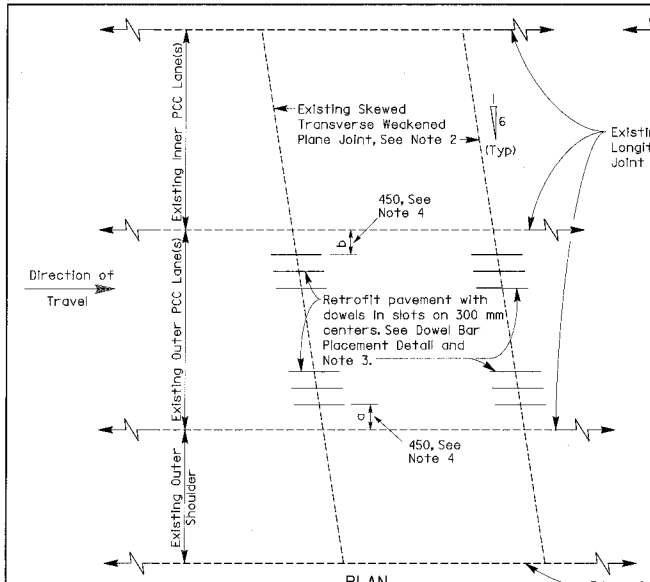

PLAN

3 DOWELS PER WHEEL PATH

See Notes 1 and 2

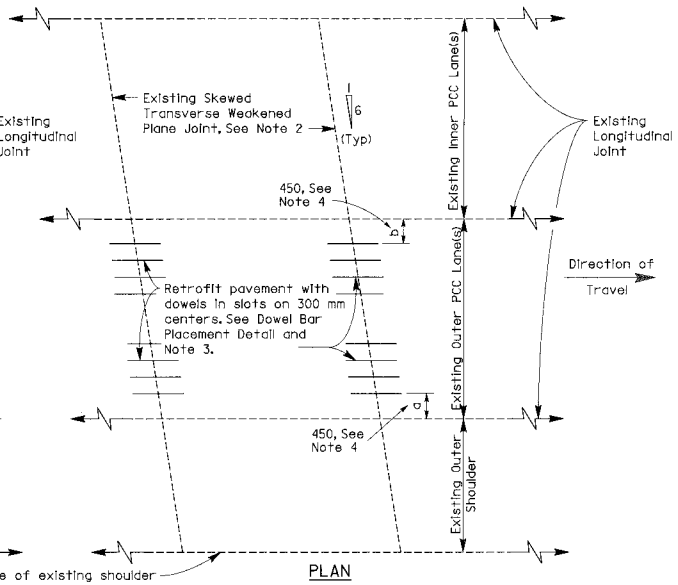

PLAN

4 DOWELS PER WHEEL PATH

See Notes 1 and 2

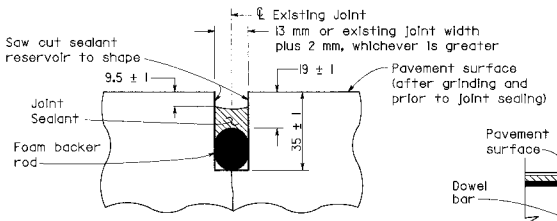

JOINT SEALING DETAIL

(See Note 8)

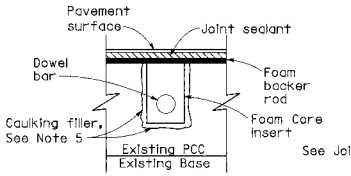

SECTION A-A

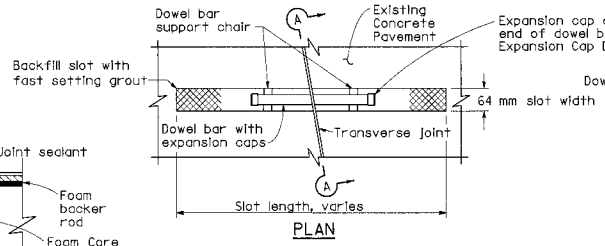

PLAN

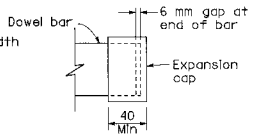

EXPANSION CAP DETAIL

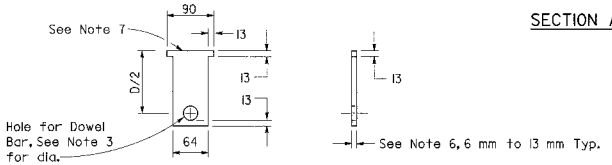

FOAM CORE INSERT DETAIL

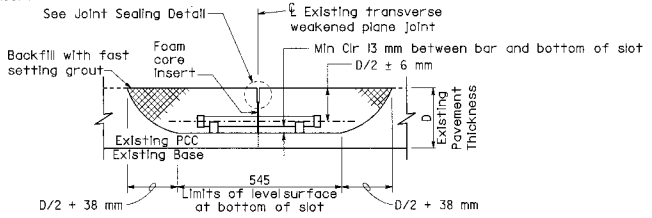

ELEVATION

DOWEL BAR PLACEMENT DETAIL

Caltrans Metric

DIST	COUNTY	ROUTE	KILOMETER POST TOTAL PROJECT	SHEET NO.	TOTAL SHEETS

REGISTERED CIVIL ENGINEER

October 26, 2000
PLANS APPROVAL DATE

REGISTERED PROFESSIONAL ENGINEER Kevin W. Harritt No. C36577 Exp. 6-30-04 CIVIL STATE OF CALIFORNIA

The State of California or its officers or agents shall not be responsible for the accuracy or completeness of electronic copies of this plan sheet.

To accompany plans dated _____

NOTES:

1. See Project Plans for existing pavement thickness, D, the number of dowels per wheel path and the lanes to be retrofitted.
2. The details shown on this plan for dowel bar retrofit also apply to existing concrete pavement constructed with transverse weakened plane joints at right angles to the centerline or longitudinal pavement joints.
3. 38 mm ø smooth epoxy coated dowels 460 mm ± 6 mm in length are to be used when the existing pavement thickness, D, is equal to or greater than 215 mm. For a pavement thickness, D, less than 215 mm, use 32 mm ø smooth epoxy coated dowels 460 mm ± 6 mm in length.
4. Where the existing outer shoulder structural section is asphalt concrete or portland cement concrete without tie bars in the longitudinal joints of the retrofit lane, the 'a' dimension shall be 300 mm and the 'b' dimension shall be 600 mm.
5. Seal existing transverse joint at bottom and sides of the dowel bar slot with caulking filler prior to placing dowel bar and foam core insert.
6. Thickness of foam core insert to match width of existing transverse weakened plane joint. See Project Plans for joint widths.
7. The top of the foam core insert is to match the top of the existing pavement surface initially. The upper portion of insert will be removed during shaping of the sealant reservoir.
8. The transverse weakened plane joint is to be sealed within the width of the pavement lane receiving the dowel bar retrofit.

STATE OF CALIFORNIA
DEPARTMENT OF TRANSPORTATION

DOWEL BAR RETROFIT IN EXISTING CONCRETE PAVEMENT (LONGITUDINAL JOINTS COINCIDE WITH LANELINE PAVEMENT DELINEATION)

NO SCALE

ALL DIMENSIONS ARE IN MILLIMETERS UNLESS OTHERWISE SHOWN

NSP A35D DATED OCTOBER 26, 2000 SUPPLEMENTS THE STANDARD PLANS BOOK DATED JULY 1, 1999

NEW STANDARD PLAN NSP A35D

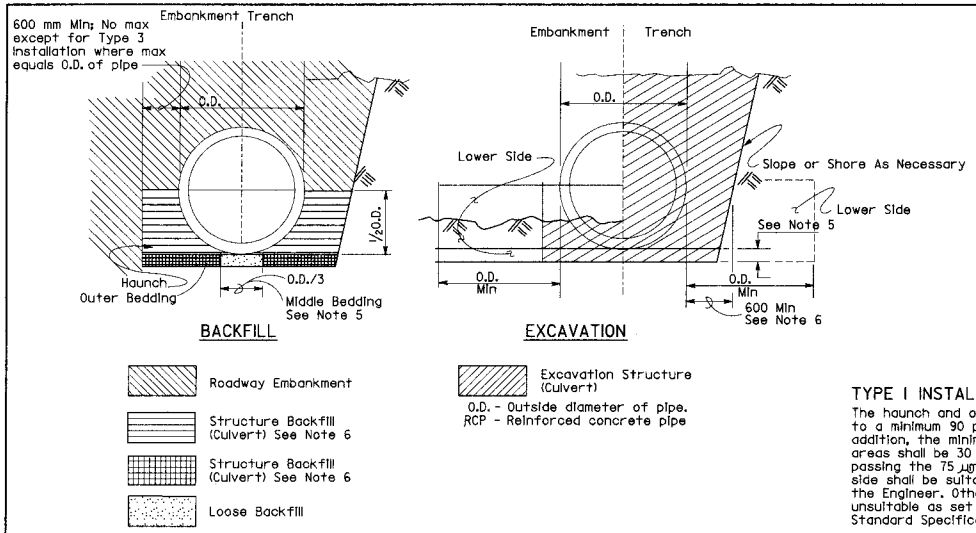

TYPE 1 INSTALLATION:

The haunch and outer bedding shall be compacted to a minimum 90 percent relative compaction. In addition, the minimum sand equivalent in these areas shall be 30 and the maximum percentage passing the 75 µm sieve size shall be 12. Lower side shall be suitable material as determined by the Engineer. Otherwise it shall be considered unsuitable as set forth in Section 19-2.02 of the Standard Specifications. See Note 9.

TYPE 2 INSTALLATION:

The haunch and outer bedding shall be compacted to a minimum 90 percent relative compaction. In addition, the minimum sand equivalent in these areas shall be 25. Lower side shall be suitable material as determined by the Engineer. Otherwise it shall be considered unsuitable as set forth in Section 19-2.02 of the Standard Specifications. See Note 9.

TYPE 3 INSTALLATION:

The haunch and outer bedding shall be compacted to a minimum 85 percent relative compaction. In addition, the minimum sand equivalent in these areas shall be 25. If the sand equivalent is between 20 and 25, 90 percent relative compaction will be required. This installation may not be used where the fill over the pipe is less than 1/2 O.D. Lower side shall be suitable material as determined by the Engineer. Otherwise it shall be considered unsuitable as set forth in Section 19-2.02 of the Standard Specifications. See Note 9.

INSTALLATION TYPE 1

MINIMUM CLASS AND D-LOAD	COVER (IN METERS)	
	2700 DIA. AND SMALLER	OVER 2700 DIA
Class II 50D	4.50	4.00
Class III 65D	4.51 - 6.40	4.01 - 5.80
Class III Special 80D	6.41 - 8.20	5.81 - 7.60
Class IV 100D	8.21 - 9.70	7.61 - 9.10
Class IV Special 120D	9.71 - 12.50	9.11 - 11.90
Class V 140D	12.51 - 15.20	11.91 - 14.30
Class V Special 170D	15.21 - 18.00	14.31 - 17.70

INSTALLATION TYPE 2

MINIMUM CLASS AND D-LOAD	COVER (IN METERS)
Class II 50D	3.00
Class III 65D	3.01 - 4.60
Class III Special 80D	4.61 - 6.10
Class IV 100D	6.11 - 7.60
Class IV Special 120D	7.61 - 9.80
Class V 140D	9.81 - 11.90
Class V Special 170D	11.91 - 14.30

INSTALLATION TYPE 3

MINIMUM CLASS AND D-LOAD	COVER (IN METERS)	
	1200 DIA. AND SMALLER	OVER 1200 DIA
Class II 50D	2.40	1.80
Class III 65D	2.41 - 3.40	1.81 - 2.70
Class III Special 80D	3.41 - 4.60	2.71 - 4.00
Class IV 100D	4.61 - 5.50	4.01 - 4.90
Class IV Special 120D	5.51 - 6.70	4.91 - 6.10
Class V 140D	6.71 - 8.20	6.11 - 7.60
Class V Special 170D	8.21 - 10.00	7.61 - 9.50

Caltrans Metric

DIST	COUNTY	ROUTE	KILOMETER POST TOTAL PROJECT	SHEET NO.	TOTAL SHEETS

Paul Cotter
REGISTERED CIVIL ENGINEER

October 26, 2000
PLANS APPROVAL DATE

REGISTERED PROFESSIONAL ENGINEER Paul Cotter No. C34509 Exp. 9-30-03 CIVIL STATE OF CALIFORNIA

The State of California or its officers or agents shall not be responsible for the accuracy or completeness of electronic copies of this plan sheet.

To accompany plans dated _____

NOTES:

1. Unless otherwise shown on the plans or specified in the special provision, the Contractor shall have the option of selecting the class of RCP and the type of installation to be used, provided the height of cover does not exceed the value shown for the RCP selected.
   Example: 600 mm RCP culvert with maximum cover of 5.80 m the options are:
   a) Class III or stronger with Installation Type 1.
   b) Class III Special or stronger with Installation Type 2.
   c) Class IV Special or stronger with Installation Type 3.
   Cover is defined as the maximum vertical distance from top of the pipe to finished grade within the length of any given culvert.
2. The class of RCP and Installation Type selected shall be the same throughout the length of any given culvert.
3. The "length of any culvert" is defined as the culvert between:
   a) Successive drainage structure (inlets, junction boxes, headwalls, etc.).
   b) A drainage structure and the inlet or outlet end of the culvert.
   c) The inlet and outlet end of the culvert when there are no intervening drainage structures.
4. Oval and arch shaped RCP shall not be used.
5. O.D./25 min, not less than 75.
6. Slurry cement backfill may be substituted for backfill in the outer bedding and haunch areas. If slurry is used the outer and middle beddings shall be omitted. Prior to installation the soil under the middle 1/3 of the outside diameter of the pipe shall be softened by scarifying or other means to a minimum depth of O.D./25, but not less than 75 mm. Where slurry cement backfill is used clear distance to trench wall may be reduced as set forth in Section 19-3.062 of the Standard Specifications.
7. Backfill shall be placed full width of excavation except where dimensions are shown for backfill width or thickness. Dimensions shown are minimums.
8. Minimum cover over top of pipe at edge of traveled way shall be 600 mm for AC pavement and 300 mm for PCC pavement.
9. Where the pipe is placed in a trench, if the trench walls are sloped at 5 vertical to 1 horizontal or steeper for at least 90 percent of the trench height, or sloped up to not less than 300 mm from the grading plane, the firmness of the soil in the lower side need not be considered.
10. Non-reinforced precast concrete pipe sizes 900 or smaller may be placed under installation types 1, 2 or 3.

STATE OF CALIFORNIA
DEPARTMENT OF TRANSPORTATION

EXCAVATION AND BACKFILL CONCRETE PIPE CULVERTS

NO SCALE

ALL DIMENSIONS ARE IN MILLIMETERS UNLESS OTHERWISE SHOWN

RSP A62DA DATED OCTOBER 26, 2000 SUPERSEDES STANDARD PLAN A62DA DATED JULY 1, 1999-PAGE 20 OF THE STANDARD PLANS BOOK DATED JULY 1999.

REVISED STANDARD PLAN RSP A62DA

1999 REVISED STD. PLAN RSP A62DA

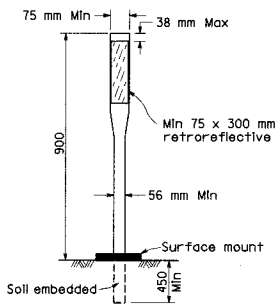

CHANNELIZERS

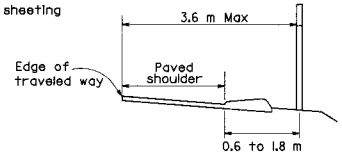

DELINEATOR POSITIONING

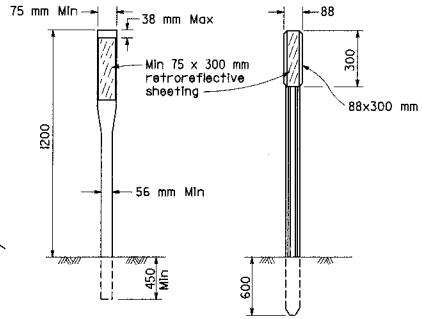

CLASS 1
FLEXIBLE POST

CLASS 2
METAL POST
See Note 4

DELINEATORS

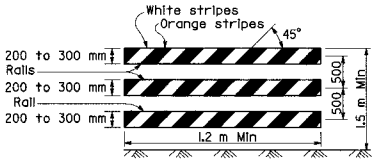

TYPE III BARRICADE

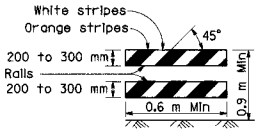

TYPE II BARRICADE

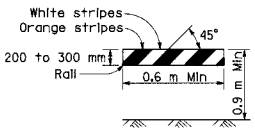

TYPE I BARRICADE
See Note A

BARRICADES (See Note 3)

Only face of rails shown. Barricade construction materials and supports as specified in the specifications.

BARRICADE	TYPE I	TYPE II	TYPE III
Width of Rail	200 mm Min-300 mm Max*	200 mm Min-300 mm Max*	200 mm Min-300 mm Max*
Length of Rail	0.6 m Min	0.6 m Min	1.2 m Min
Width of Stripes **	150 mm	150 mm	150 mm
Height	0.9 m Min	0.9 m Min	1.5 m Min
Number of Retroreflective Rail Faces	2 (one each direction)	4 (two each direction)	3 if facing traffic in one direction 6 if facing traffic in two direction

* For the wooden option dimensions are nominal lumber dimensions.

* * For rails less than 0.9 m long, 100 mm wide stripes shall be used.

NOTE A

Barricades to have a minimum of 0.17 m^2 (174,204 mm^2) of retroreflective area facing traffic when used on freeways, expressways, and other high speed highways.

Caltrans Metric

DIST	COUNTY	ROUTE	KILOMETER POST TOTAL PROJECT	SHEET NO.	TOTAL SHEETS

REGISTERED CIVIL ENGINEER

October 26, 2000
PLANS APPROVAL DATE

REGISTERED PROFESSIONAL ENGINEER G.W. Edwards No. C36386 Exp. 6-30-04 CIVIL STATE OF CALIFORNIA

The State of California or its officers or agents shall not be responsible for the accuracy or completeness of electronic copies of this plan sheet.

To accompany plans dated _____

DELINEATORS		
TYPE	RETROREFLECTIVE SHEETING	
	FRONT	BACK
E	White	White (See Note 1)
F	White	None
G	Yellow	None
I	Yellow	Yellow (See Note 1)
J	Red	None

NOTES

1. The retroreflective sheeting used on the back of delineator shall be a minimum size of 75 mm x 75 mm.
2. The type of delineator to be installed will be designated on the plans.
3. All barricade stripes shall be retroreflective.
4. See Standard Plan A73B for Metal Post Details.

STATE OF CALIFORNIA
DEPARTMENT OF TRANSPORTATION

DELINEATORS, CHANNELIZERS AND BARRICADES

NO SCALE

ALL DIMENSIONS ARE IN MILLIMETERS UNLESS OTHERWISE SHOWN

RSP A73C DATED OCTOBER 26, 2000 SUPERSEDES STANDARD PLAN A73C DATED JULY 1, 1999-PAGE 25 OF THE STANDARD PLANS BOOK DATED JULY 1999.

REVISED STANDARD PLAN RSP A73C

1999 REVISED STD. PLAN RSP A73C

DIST	COUNTY	ROUTE	KILOMETER POST TOTAL PROJECT	SHEET NO.	TOTAL SHEETS

Caltrans Metric

REGISTERED CIVIL ENGINEER

October 26, 2000
PLANS APPROVAL DATE

REGISTERED PROFESSIONAL ENGINEER Roy A. Peterson No. C47715 Exp. 12-31-03 CIVIL STATE OF CALIFORNIA

The State of California or its officers or agents shall not be responsible for the accuracy or completeness of electronic copies of this plan sheet.

To accompany plans dated _____

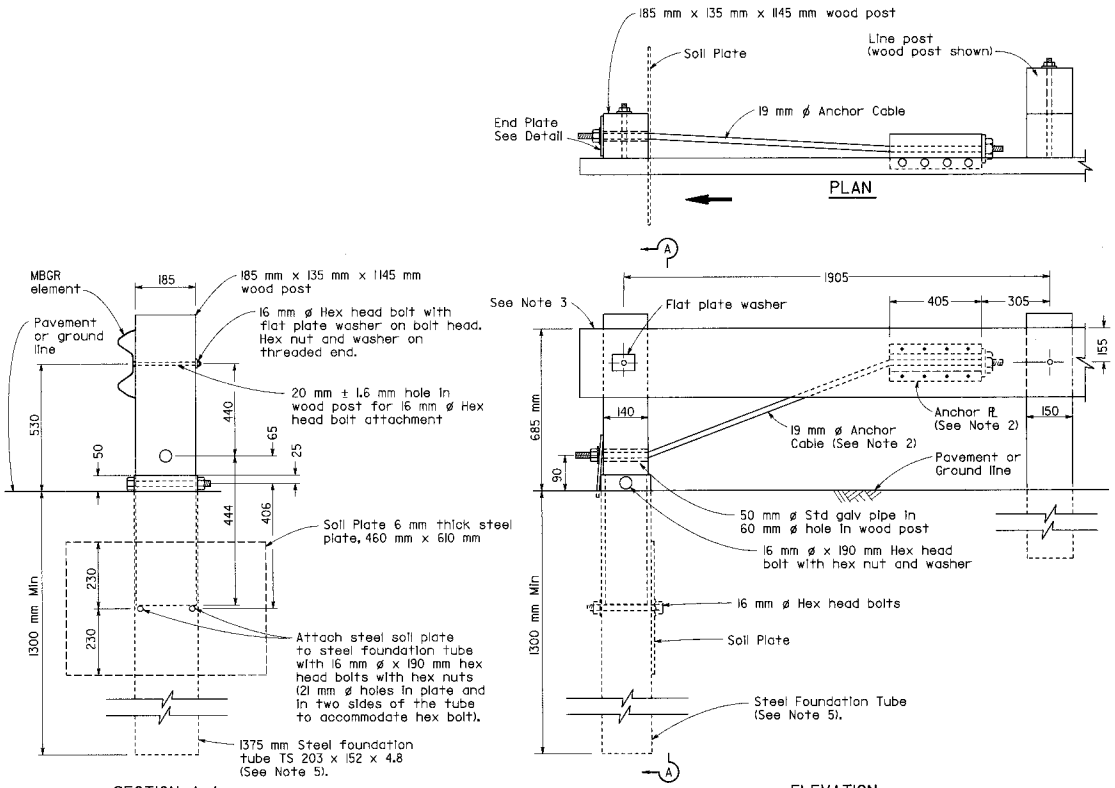

NOTES

1. Terminal Anchor Assembly (Type SFT) is typically used on the trailing end of guard railing for embankment installations except two-way road beds less than 18 m in width. See Standard Plans A77D and A77E.
2. For details of the anchor plate and 19 mm cable, see Standard Plan A77H.
3. Terminal sections not to be installed on trailing end of guard railing constructed adjacent to one-way roadway.
4. For type of terminal system and guard railing layout to be used, see Project Plans and Special Provisions.
5. A 1830 mm length steel foundation tube, TS 203 x 152 x 4.8, without a soil plate, may be furnished and installed in place of the 1375 mm length steel foundation tube and soil plate shown. Minimum embedment of the 1830 mm length tube shall be 1760 mm. A 16 mm ø hex head bolt and nut shall be installed in the hole in the 1830 mm length tube to keep the wood post from dropping into the tube.
6. Direction of traffic indicated by ⟶.

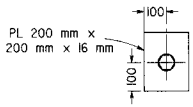

END PLATE DETAIL

STATE OF CALIFORNIA
DEPARTMENT OF TRANSPORTATION

METAL BEAM GUARD RAILING END TREATMENT TERMINAL ANCHOR ASSEMBLY (TYPE SFT)

NO SCALE

ALL DIMENSIONS ARE IN MILLIMETERS UNLESS OTHERWISE SHOWN

RSP A77G DATED OCTOBER 26, 2000 SUPERSEDES STANDARD PLAN A77G DATED JULY 1, 1999-PAGE 46 OF THE STANDARD PLANS BOOK DATED JULY 1999.

REVISED STANDARD PLAN RSP A77G

1999 REVISED STD. PLAN RSP A77G

DIST	COUNTY	ROUTE	KILOMETER POST TOTAL PROJECT	SHEET NO.	TOTAL SHEETS

REGISTERED CIVIL ENGINEER

October 26, 2000
PLANS APPROVAL DATE

The State of California or its officers or agents shall not be responsible for the accuracy or completeness of electronic copies of this plan sheet.

REGISTERED PROFESSIONAL ENGINEER Roy A. Peterson No. C47715 Exp. 12-31-03 CIVIL STATE OF CALIFORNIA

To accompany plans dated _____

TABLE A

POST OFFSET DIMENSIONS

Post No.	915 mm System End Offset	1070 mm System End Offset
1	915 mm	1070 mm
2	565 mm	705 mm
3	300 mm	420 mm
4	170 mm	270 mm
5	75 mm	150 mm
6	20 mm	70 mm
7	0 mm	20 mm
8	0 mm	0 mm
9	0 mm	0 mm

See Note 12

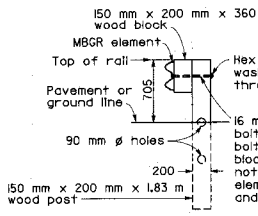

SECTION A-A

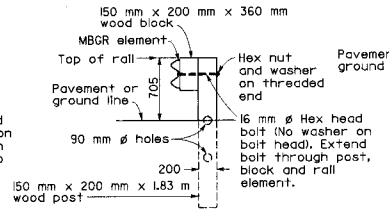

SECTION B-B

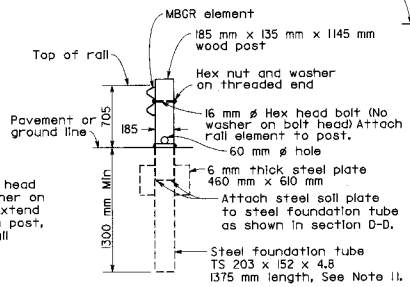

SECTION C-C

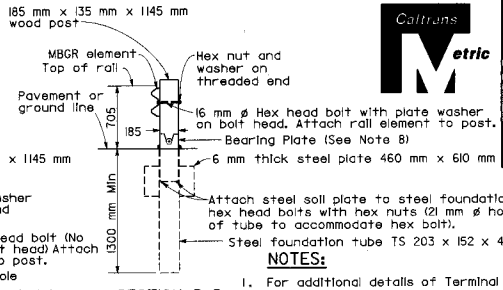

SECTION D-D
(Terminal Section not shown)

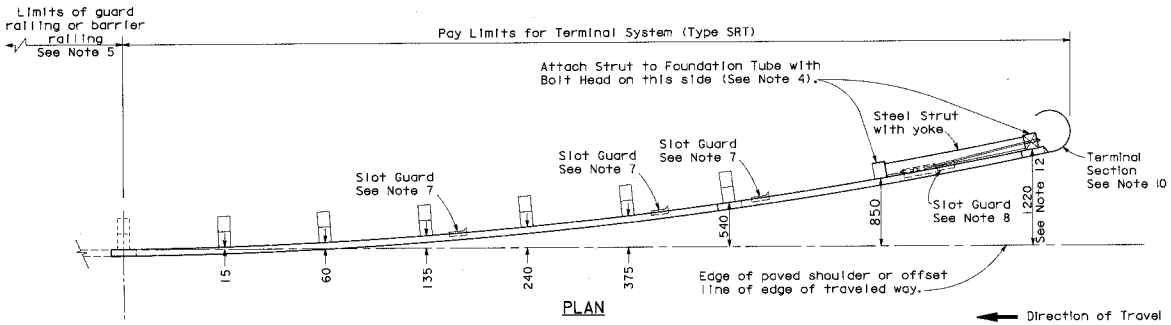

PLAN

Direction of Travel

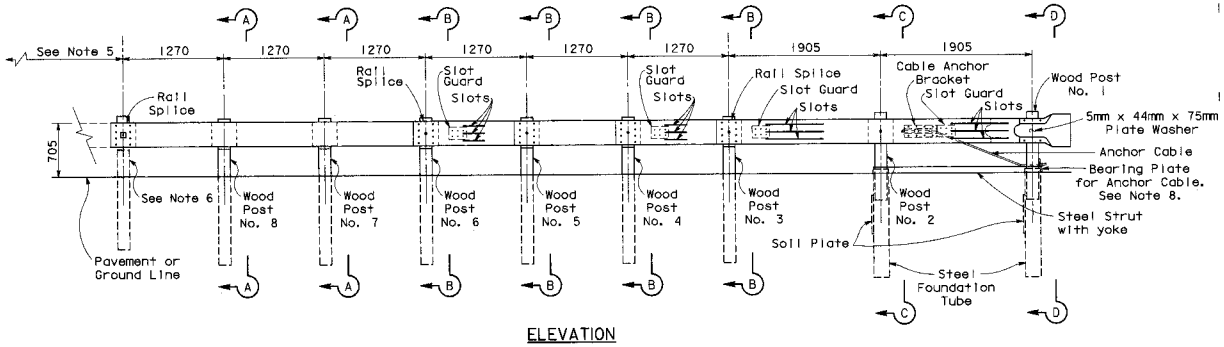

ELEVATION

TERMINAL SYSTEM (TYPE SRT)

(8 Post System)
See Note 9

NOTES:

1. For additional details of Terminal System (Type SRT), refer to the manufacturer's installation instructions.
2. The post offset dimensions are given to the center of the traffic face of the block, except at the first two posts, where the dimension is to the center of the traffic face of the post. Offset points are to be located by chord measurements at the back of the rail equal to the nominal post spacings shown. Posts are to be set approximately radial to the railing at each post location.
3. Do not attach rail elements to posts 7 and 8.
4. Attach strut to Post Nos. 1 and 2 foundation tubes with 16 mm ø hex head bolts, washers and hex nuts. Bolts extend through the strut, steel foundation tube, and wood posts.
5. For the length and type of guard railing or barrier the terminal system is attached to, see the Project Plans. For minimum length of guard railing used with terminal system end treatments, see Standard Plans A77D and A77E.
6. Attach rail element to this post and block. Payment for this post, block and hardware is included in payment for the type of railing or barrier the terminal system is attached to, not part of payment for Terminal System (Type SRT).
7. The deflector angle of the slot guard is to be positioned immediatley downstream of the slots.
8. For bearing plate orientation, refer to the manufacturer's installation instructions.
9. Terminal system (Type SRT) is a flared end treatment for guard railing or single faced barrier railing. See Type 1A and 1B Layouts on Standard Plan A77D and Type 8A Layout on Standard Plan A77E for typical use of this terminal system with guard railing. See Standard Plan A78E for typical use of this terminal system with single thrie beam barrier.
10. A complete wrap around terminal section may continued to be used in existing installations. New installations shall be constructed with the ¾ wrap terminal section shown.
11. A 1830 mm length steel foundation tube, TS 203 x 152 x 4.8, without a soil plate, may be furnished and installed in place of the 1375 mm length steel foundation tube and soil plate shown. Minimum embedment of the 1830 mm length tube shall be 1760 mm. A 16 mm ø hex head bolt and nut shall be installed in the hole in 1830 mm length tube to keep the wood post from dropping into the tube.
12. Where site conditions will not accommodate use of the standard 1220 mm system end offset, 1070 mm or 915 mm system end offsets, as applicable, may be used. See Table A for post offset dimensions for 1070 mm and 915 mm system end offsets.

STATE OF CALIFORNIA
DEPARTMENT OF TRANSPORTATION

METAL BEAM GUARD RAILING AND SINGLE FACED BARRIER RAILING TERMINAL SYSTEM END TREATMENTS

NO SCALE

ALL DIMENSIONS ARE IN MILLIMETERS UNLESS OTHERWISE SHOWN

RSP A77L DATED OCTOBER 26, 2000 SUPERSEDES STANDARD PLAN A77L DATED JULY 1, 1999-PAGE 52 OF THE STANDARD PLANS BOOK DATED JULY 1999.

REVISED STANDARD PLAN RSP A77L

1999 REVISED STD. PLAN RSP A77L

DIST	COUNTY	ROUTE	KILOMETER POST TOTAL PROJECT	SHEET NO.	TOTAL SHEETS

Caltrans Metric

REGISTERED CIVIL ENGINEER

October 26, 2000
PLANS APPROVAL DATE

REGISTERED PROFESSIONAL ENGINEER Roy A. Peterson No. C47715 Exp. 12-31-03 CIVIL STATE OF CALIFORNIA

The State of California or its officers or agents shall not be responsible for the accuracy or completeness of electronic copies of this plan sheet.

To accompany plans dated _____

NOTES:

1. For additional details of Terminal System (Type ET), refer to the manufacturer's installation instructions.
2. Terminal System (Type ET) must be constructed so that the full length of the terminal system guard railing is in straight alignment. The Guard Rail Extruder head of the terminal system shall not encroach upon the adjacent paved shoulder or lane. A traffic approach flare of 50:1 for the full length of Terminal System (Type ET) installation shall be used where the Guard Rail Extruder head would encroach upon the adjacent paved shoulder or lane.
3. Slide Guard Rail Extruder over the end of the rail element and attach to Post No.1 with lag screws. Do not bolt rail element to post. Guard Rail Extruder attachment brackets have 3 holes in each bracket to provide tolerance adjustment. Use the holes in the bracket closest to center of Post No.1. Drill 6 mm pilot holes to accommodate lag screws.
4. Attach strut to Post Nos.1 and 2 foundation tubes with hex head bolts, washers and hex nuts. Bolts extend through the strut, steel foundation tube, and wood posts. Channel side of strut to face downward.
5. For length and type of guard railing or barrier the terminal system is attached to, see Project Plans. For minimum length of guard railing used with terminal system end treatments, see Standard Plans A77D and A77E.
6. Attach rail element to this post and block. Payment for this post, block and hardware included in payment for the type of railing or barrier the terminal system is attached to, not part of the payment for Terminal System (Type ET).
7. Yellow retroreflective sheeting, as provided by Terminal System (Type ET) manufacturer, shall be adhered to the face of extruder head. The sheeting shall be consistent with the design pattern and colors of a Type P object marker panel.
8. Attach rail to Post No. 2 (no wood block) in same manner shown in section A-A. Do not bolt rail to Post No.1, See Note 3.
9. Terminal System (Type ET) is an in-line end treatment for guard railing or single faced barrier railing where site conditions will not accomodate use of a flared end treatment. Do not use Terminal System (Type ET) where extrusion of the rail on the back side of the installation would be in the path of pedestrian or vehicular traffic.
10. A continuous rail element section between Post Nos.1 and 5 (no intermediate rail splices) may continue to be used in existing installations. New installations shall be constructed as shown.
11. A 1830 mm length steel foundation tube, TS 203 x 152 x 4.8, without a soil plate, may be furnished and installed in place of the 1375 mm length steel foundation tube and soil plate shown. Minimum embedment of the 1830 mm length tube shall be 1760 mm. A 16 mm ø hex head bolt and nuts shall be installed in the hole in the 1830 mm length tube to keep the wood post from dropping into the tube.

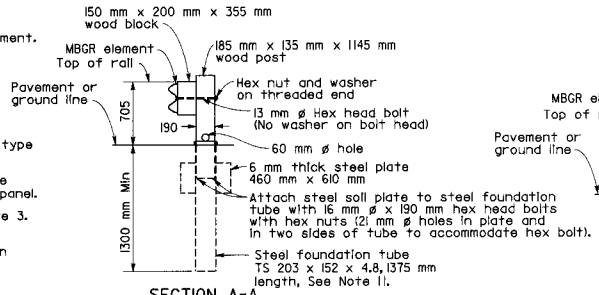

SECTION A-A

Soil plate and wood post attachment to steel foundation tube similar for Post Nos. 1, 2 and 4. Wood blocks not used with Post Nos.1 and 2. See Note 8.

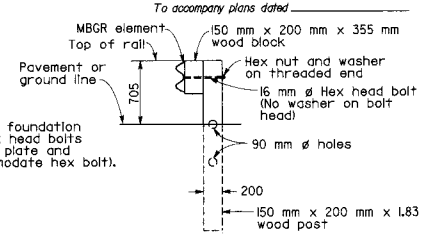

SECTION B-B

Post Nos. 5, 7 and 8 similar except rail elements are not attached to Post Nos.5 and 7

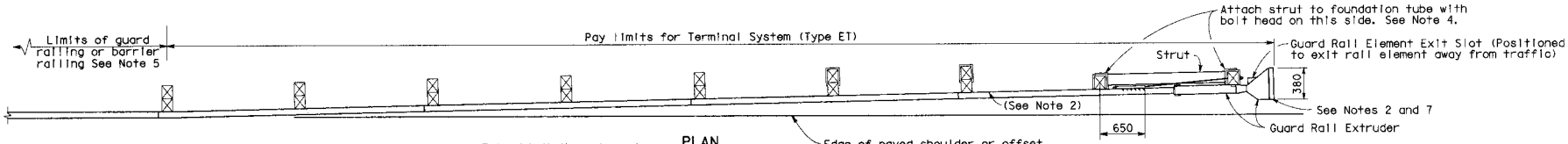

PLAN

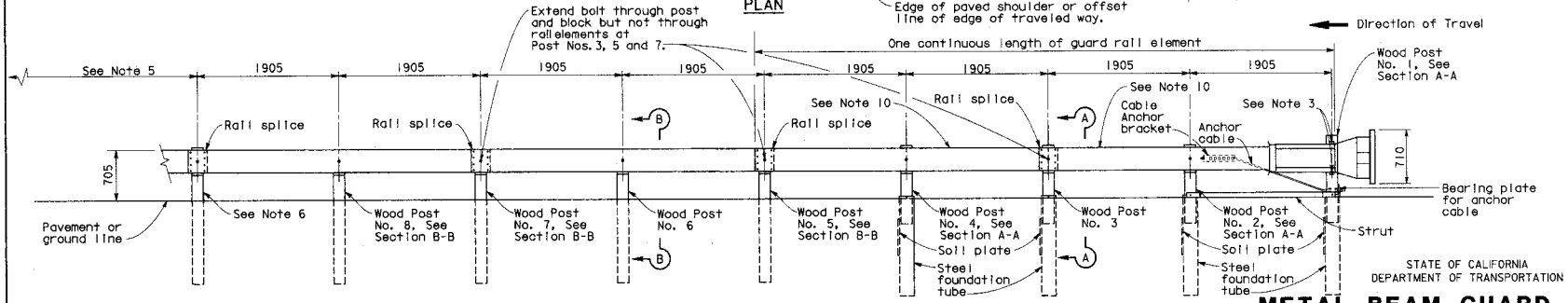

ELEVATION

TERMINAL SYSTEM (TYPE ET)

See Notes 9 and 10

STATE OF CALIFORNIA
DEPARTMENT OF TRANSPORTATION

METAL BEAM GUARD RAILING AND SINGLE FACED BARRIER RAILING TERMINAL SYSTEM END TREATMENT

NO SCALE

ALL DIMENSIONS ARE IN MILLIMETERS UNLESS OTHERWISE SHOWN

RSP A77M DATED OCTOBER 26, 2000 SUPERSEDES STANDARD PLAN A77M DATED JULY 1, 1999-PAGE 53 OF THE STANDARD PLANS BOOK DATED JULY 1999.

REVISED STANDARD PLAN RSP A77M

1999 REVISED STD. PLAN RSP A77M

NOTES:

1. For additional details of Terminal System (Type CAT), refer to the manufacturer's installation instructions.
2. Terminal System (Type CAT) is to be used as an in-line end treatment for guard railing or single faced barrier railing where site conditions will not accommodate use of a flared end treatment. Terminal System (Type CAT) to be used only in locations where there will be traffic on one side of the terminal system. For those locations where traffic would be on both sides of the CAT system, see Standard Plan A82A.
3. The Terminal System Backup is required for all Terminal System (Type CAT) installations. This allows the slotted rail elements to slide over the face of the unslotted rail elements.
4. For length and type of railing or barrier the terminal system is attached to, see Project Plans. For minimum length of guard railing used with terminal system end treatments, see Standard Plans A77D and A77E.
5. Both of the 3.43 mm thick slotted rail elements have an attachment plate welded to the back side of one end of each rail element. Attach the welded plate end of the rail elements to Post No. 4 prior to splicing the 2.67 mm thick slotted rail element over the 3.43 mm thick slotted rail element.
6. The 2.67 mm thick slotted rail elements have four 19 mm diameter holes near one end of the rail elements for the attachment of the spacer channel. Attach this end of the rail elements to Post No. 2.
7. For details of the anchor plate and 19 mm cable attached to Post No. 6, see Standard Plan A77H.
8. Attach steel soil plate to steel foundation tube with 16 mm ø x 190 mm hex head bolts with hex nuts (21 mm ø holes in plate and in two sides of tube to accommodate hex bolts).
9. The 150 mm x 200 mm knockout tube is to be located 100 mm down from top of wood post. Attach the knockout tube to the post with two 10 mm ø lag screws and flat washers.
10. Attach strut to Post Nos. 1 and 2 foundation tubes with 16 mm ø hex head bolts, washers, and hex nuts. Bolts extend through the strut, steel foundation tube, and wood posts.
11. Do not attach the rail elements to Post Nos. 3, 5 and 6.
12. Yellow retroreflective sheeting, as provided by the Terminal System (Type CAT) manufacturer, shall be adhered to the rounded end of nose plate. The sheeting shall be consistent with the design pattern and colors of a Type P object marker panel. The sheeting shall be positioned on the end of nose plate so that it is visible to approaching traffic.
13. A 1830 mm length steel foundation tube, TS 203 x 152 x 4.8, without a soil plate, may be furnished and installed in place of the 1375 mm length steel foundation tube and soil plate shown. Minimum embedment of the 1830 mm length tube shall be 1760 mm. A 16 mm ø hex head bolt and nut shall be installed in the hole in 1830 mm length tube to keep the wood post from dropping into the tube.

To accompany plans dated _____

Caltrans Metric

DIST	COUNTY	ROUTE	KILOMETER POST TOTAL PROJECT	SHEET NO.	TOTAL SHEETS

REGISTERED CIVIL ENGINEER

October 26, 2000
PLANS APPROVAL DATE

REGISTERED PROFESSIONAL ENGINEER Roy A. Peterson No. C47715 Exp. 12-31-03 CIVIL STATE OF CALIFORNIA

The State of California or its officers or agents shall not be responsible for the accuracy or completeness of electronic copies of this plan sheet.

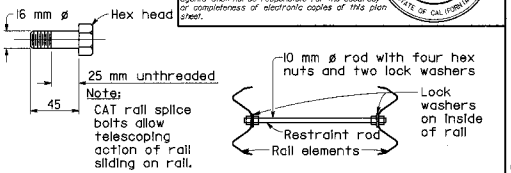

CAT RAIL SPLICE BOLT
Use at Post Nos. 4 and 6

SECTION D-D

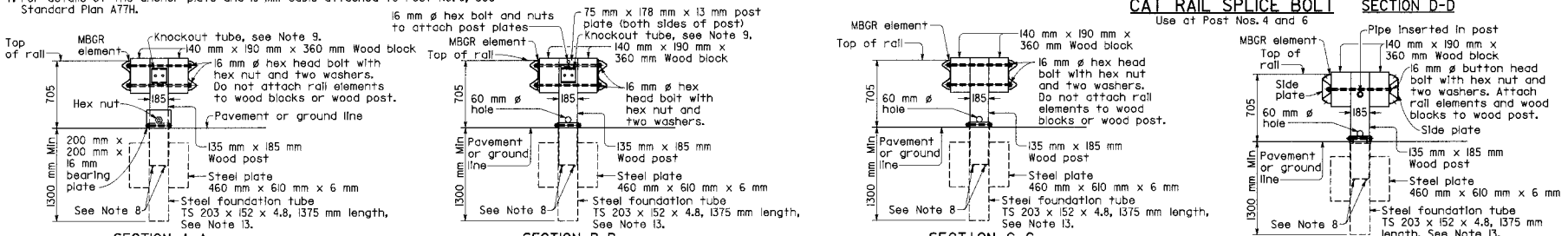

SECTION A-A

SECTION B-B
See Note 5

SECTION C-C

SECTION E-E

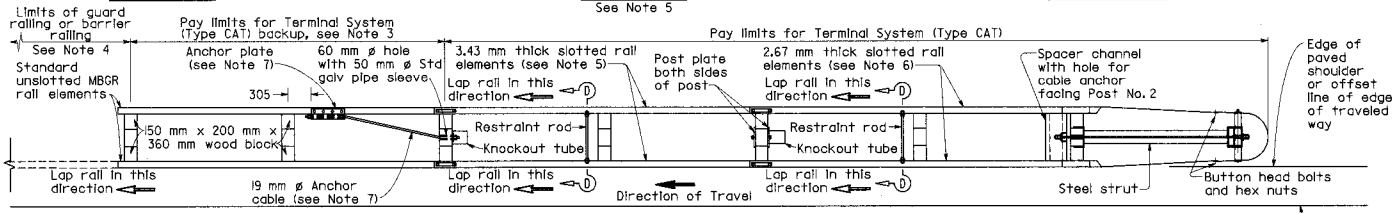

PLAN

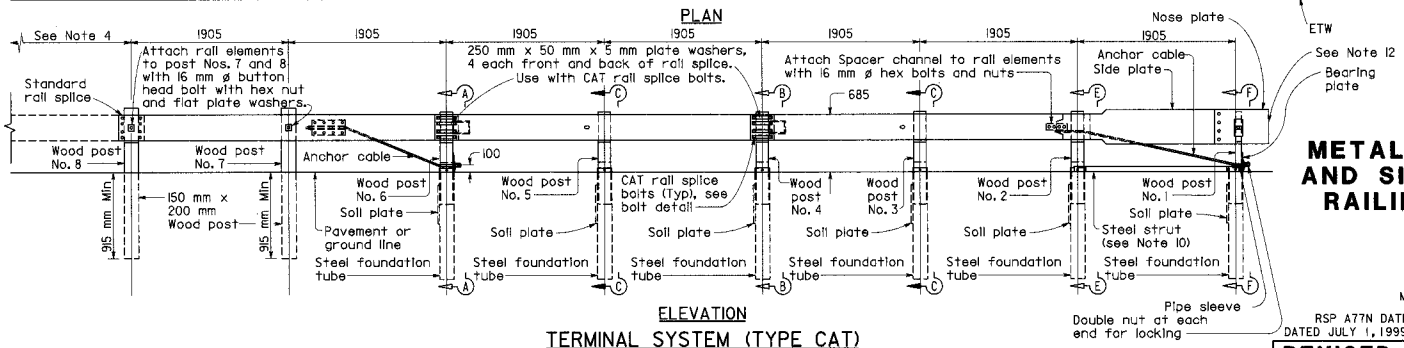

ELEVATION

TERMINAL SYSTEM (TYPE CAT)
See Note 2

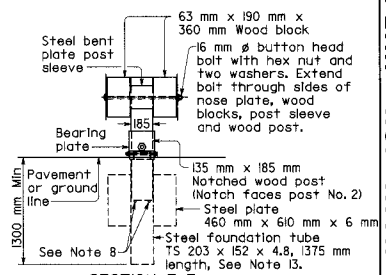

SECTION F-F

STATE OF CALIFORNIA
DEPARTMENT OF TRANSPORTATION

METAL BEAM GUARD RAILING AND SINGLE FACED BARRIER RAILING TERMINAL SYSTEM END TREATMENT

NO SCALE

ALL DIMENSIONS ARE IN MILLIMETERS UNLESS OTHERWISE SHOWN

RSP A77N DATED OCTOBER 26, 2000 SUPERSEDES STANDARD PLAN A77N DATED JULY 1, 1999-PAGE 54 OF THE STANDARD PLANS BOOK DATED JULY 1999.

REVISED STANDARD PLAN RSP A77N

1999 REVISED STD. PLAN RSP A77N

NOTES:

1. For additional details of Crash Cushion (Type CAT), refer to the manufacturer's installation instructions.
2. Crash Cushion (Type CAT) may be used at sites where the sides of the crash cushion would be exposed to opposing directions of travel (bidirectional traffic) or the same direction of travel (unidirectional traffic). For locations where traffic would only be on one side of the CAT system, use the Standard Plan A77N.
3. The Crash Cushion Backup is required for all Crash Cushion (Type CAT) installations. This allows the slotted rail elements to slide over the face of the unslotted rail elements.
4. For length and type of railing or barrier the crash cushion is attached to, see Project Plans.
5. Both of the 3.43 mm thick slotted rail elements have an attachment plate welded to the back side of one end of each rail element. Attach the welded plate end of the rail elements to Post No. 4 prior to splicing the 2.67 mm thick slotted rail element over the 3.43 mm thick slotted rail element.
6. The 2.67 mm thick slotted rail elements have four 19 mm diameter holes near one end of the rail elements for the attachment of the spacer channel. Attach this end of the rail elements to Post No. 2.
7. Attach steel soil plate to steel foundation tube with 16 mm ø x 190 mm hex head bolts with hex nuts (21 mm ø holes in plate and in two sides of tube to accommodate hex bolts).
8. The 150 mm x 200 mm knockout tube is to be located 100 mm down from top of wood post. Attach the knockout tube to the post with two 10 mm ø lag screws and flat washers.
9. Attach strut to Post Nos. 1 and 2 foundation tubes with 16 mm ø hex head bolts, washers, and hex nuts. Bolts extend through the strut, steel foundation tube, and wood posts.
10. Do not attach the rail elements to Post Nos. 3, 5 and 6.
11. Yellow retroreflective sheeting, as provided by the Crash Cushion (Type CAT) manufacturer, shall be adhered to the rounded end of nose plate. The sheeting shall be consistent with the design pattern and colors of a Type P object marker panel for unidirectional traffic and that of a TYPE R object marker panel for bidirectional traffic. The sheeting shall be positioned on the end of the nose plate so that it is visible to approaching traffic.
12. A 1830 mm length steel foundation tube, TS 203 x 152 x 4.8, without a soil plate, may be furnished and installed in place of the 1375 mm length steel foundation tube and soil plate shown. Minimum embedment of the 1830 mm length tube shall be 1760 mm. A 16 mm ø hex head bolt and nut shall be installed in the hole in 1830 mm length tube to keep the wood post from dropping into the tube.

To accompany plans dated _____

Caltrans Metric

DIST	COUNTY	ROUTE	KILOMETER POST TOTAL PROJECT	SHEET NO.	TOTAL SHEETS

REGISTERED CIVIL ENGINEER

October 26, 2000
PLANS APPROVAL DATE

The State of California or its officers or agents shall not be responsible for the accuracy or completeness of electronic copies of this plan sheet.

REGISTERED PROFESSIONAL ENGINEER — Roy A. Peterson No. C47715 Exp. 12-31-03 CIVIL — STATE OF CALIFORNIA

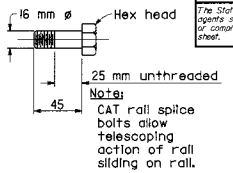

CAT RAIL SPLICE BOLT
Use at Post Nos. 4 and 6

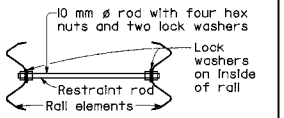

SECTION D-D

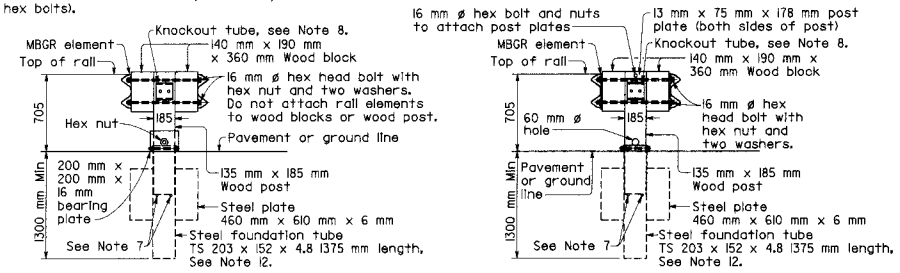

SECTION A-A

SECTION B-B
See Note 5

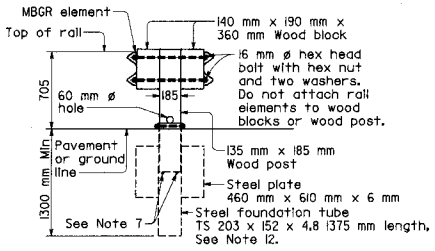

SECTION C-C

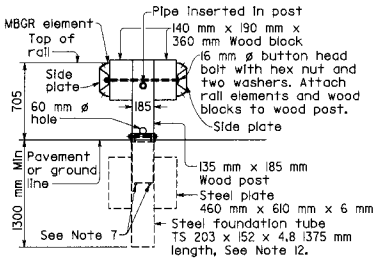

SECTION E-E

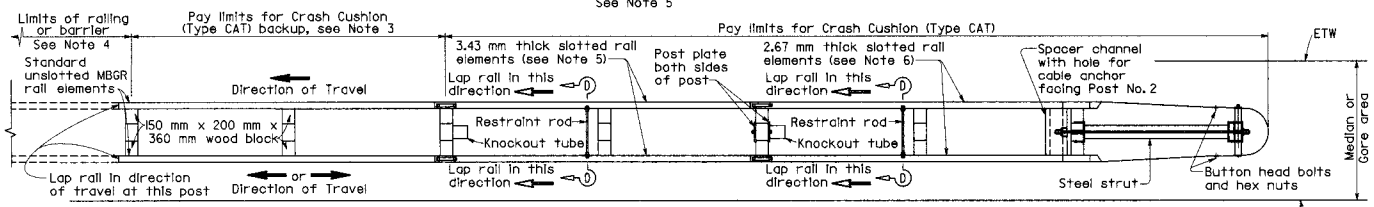

PLAN

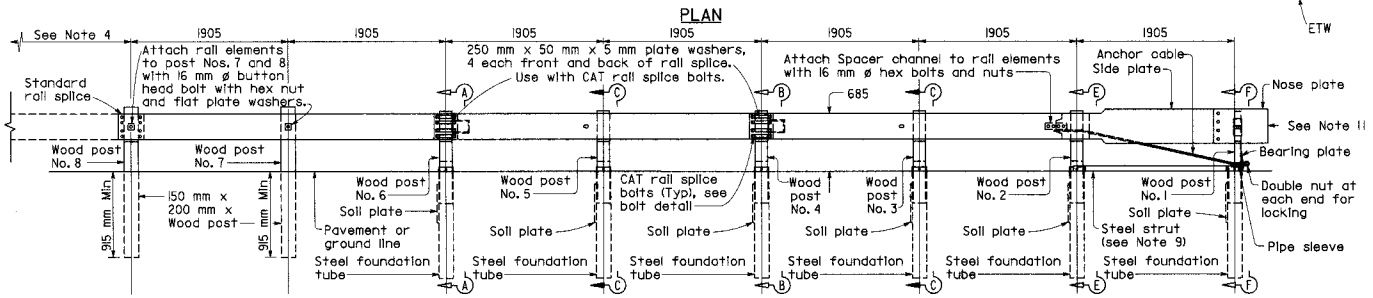

ELEVATION

CRASH CUSHION (TYPE CAT)
See Note 2

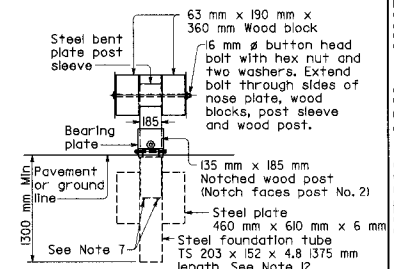

SECTION F-F

STATE OF CALIFORNIA
DEPARTMENT OF TRANSPORTATION

CRASH CUSHION (TYPE CAT)

NO SCALE

ALL DIMENSIONS ARE IN MILLIMETERS UNLESS OTHERWISE SHOWN

RSP A82A DATED OCTOBER 26, 2000 SUPERSEDES STANDARD PLAN A82A DATED JULY 1, 1999-PAGE 67 OF THE STANDARD PLANS BOOK DATED JULY 1999.

REVISED STANDARD PLAN RSP A82A

1999 REVISED STD. PLAN RSP A82A

DIST	COUNTY	ROUTE	KILOMETER POST TOTAL PROJECT	SHEET NO.	TOTAL SHEETS

Caltrans Metric

REGISTERED CIVIL ENGINEER

October 26, 2000
PLANS APPROVAL DATE

REGISTERED PROFESSIONAL ENGINEER Overcomer Y. Hor No. C45803 Exp. 12-31-02 CIVIL STATE OF CALIFORNIA

The State of California or its officers or agents shall not be responsible for the accuracy or completeness of electronic copies of this plan sheet.

To accompany plans dated _____

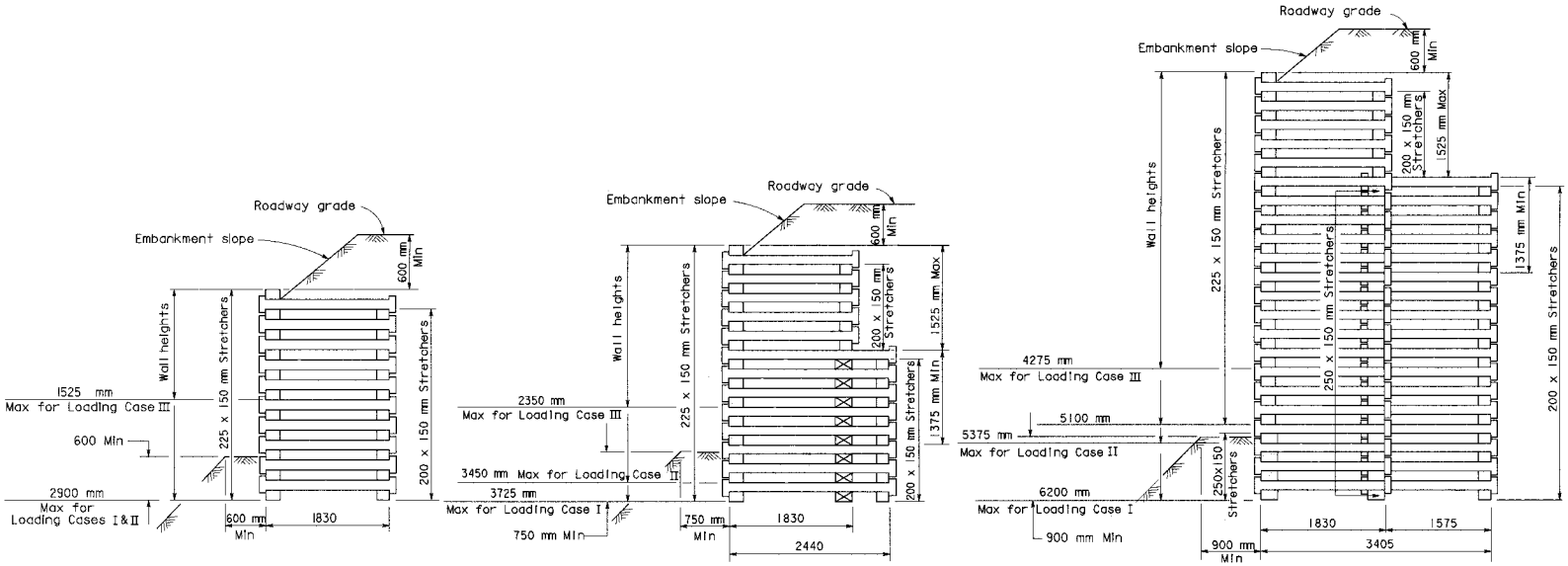

TYPE A

TYPE B

TYPE C

LEGEND

⊠ = 250 x 150 x 250 mm Filler block placed under header

STATE OF CALIFORNIA
DEPARTMENT OF TRANSPORTATION

REINFORCED CONCRETE CRIB WALL VERTICAL WALL- TYPES A, B AND C

NO SCALE

ALL DIMENSIONS ARE IN MILLIMETERS UNLESS OTHERWISE SHOWN

RSP C7C DATED OCTOBER 26, 2000 SUPERSEDES STANDARD PLAN C7C DATED JULY 1, 1999-PAGE 84 OF THE STANDARD PLANS BOOK DATED JULY 1999.

REVISED STANDARD PLAN RSP C7C

1999 REVISED STD. PLAN RSP C7C

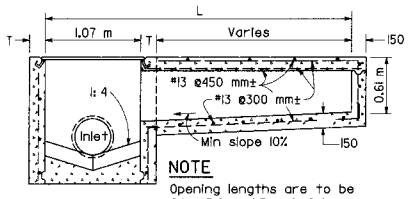

NOTE

Opening lengths are to be 2.1 m, 3.0 m, 4.3 m, & 6.4 m.

SECTION A-A

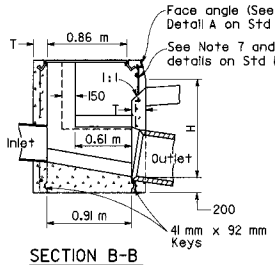

SECTION B-B

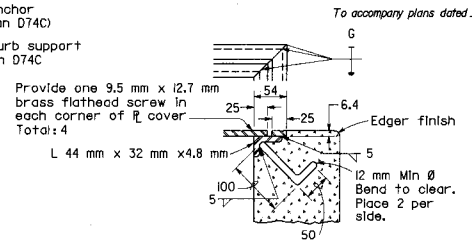

SECTION C-C

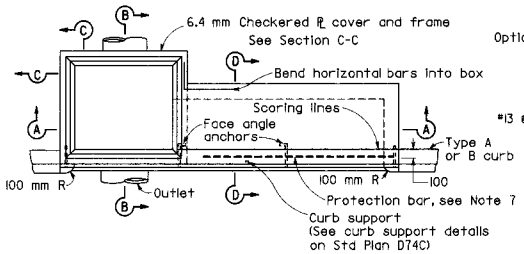

PLAN

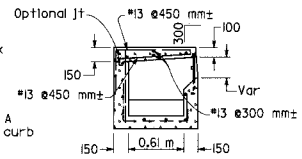

SECTION D-D

TYPE OL

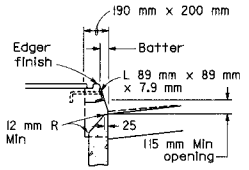

TYPE A CURBS

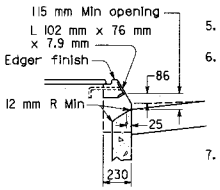

TYPE B CURBS

CURB OPENING DETAILS

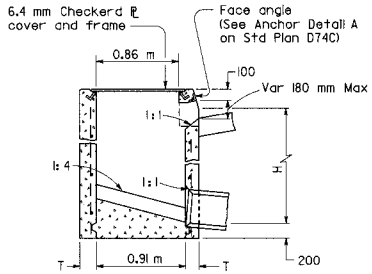

SECTION E-E

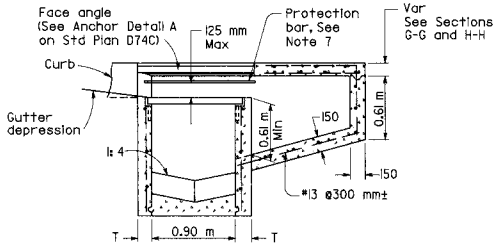

SECTION F-F

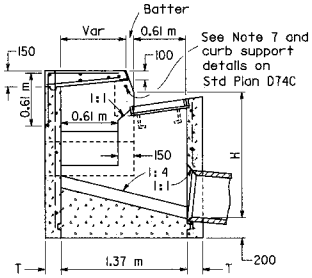

SECTION G-G

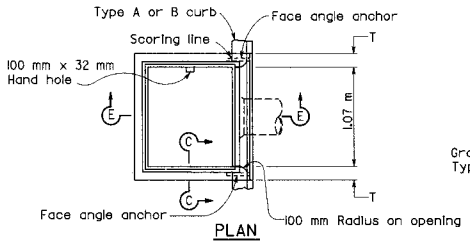

PLAN

TYPE OS

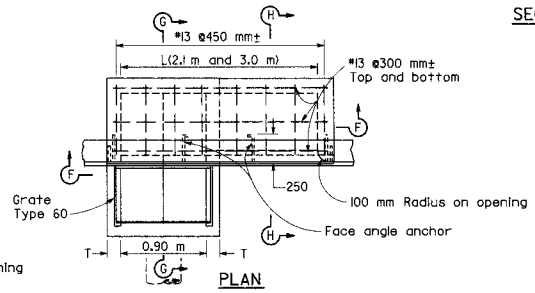

PLAN

TYPE GOL

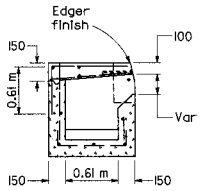

SECTION H-H

NOTES

1. "H" is the difference in elevation between the outlet pipe flow line and the normal gutter grade line undepressed at the curb face.
2. For "T" wall thickness, see Table A below.
3. Height of curb opening will vary with the type of curb and the depth of the local depression.
4. Wall reinforcing not required when "H" is 2.5 m or less and the unsupported width or length is 2.1 m or less. Walls exceeding these limits shall be reinforced with #13 bars @ 450 mm± centers placed 40 mm clear to inside of box unless otherwise shown.
5. Inlet bottom reinforcing not required. See Standard Plan D74C for alternative reinforced bottom.
6. Steps- None required where "H" is less than 0.75 m. Where "H" is 0.75 m or more, install steps with lowest rung 300 mm above the floor and highest rung not more than 150 mm below top of inlet. The distance between steps shall not exceed 300 mm and be uniform throughout the length of the wall. Place steps in the wall without an opening. Step inserts may be substituted for the bar steps. Step inserts shall comply with State Industrial Safety requirements. See Standard Plan D74C for step details.
7. When shown on the project plans, place a 19 mm plain round protection bar horizontally across the length of the opening and bend back 100 mm into the inlet wall on each side.
8. Pipe(s) can be placed in any wall.
9. Curb section shall match adjacent curb.
10. Except for inlets used as junction boxes, basin floor shall have a minimum slope of 1:4 from all directions toward outlet pipe and shall have a wood trowel finish.
11. Galvanizing-See Standard Specifications or Special Provisions.
12. See Standard Plans D77A and D77B for grate and frame details and masses of miscellaneous iron and steel.
13. See Standard Plan D78 for gutter depression details.
14. Full penetration butt welds may be substituted for the fillet welds on all anchors.
15. Standard square, hexagon, round or equivalent headed anchors may be substituted for the right angle hooks on the anchors shown on this plan.
16. Cast-in-place or precast alternative is optional with contractor. See Standard Specifications.

TABLE A

CONCRETE QUANTITIES				
Type	H=0.90 m to 2.50 m (T=150 mm)		H=2.51 m to 6.00 m (T=200 mm)	
	H=0.90 m (m^3)	Additional PCC per meter (m^3)	H=2.51 m (m^3)	Additional PCC per meter (m^3)
OS	1.04	0.69	2.91	0.96
OL-2.1	1.42	0.69	3.28	0.96
OL-3.0	1.77	0.69	3.65	0.96
OL-4.3	2.26	0.69	4.17	0.96
OL-6.4	3.33*	0.69	5.18	0.96
GOL-2.1	1.72	0.78	3.79	1.07
GOL-3.0	2.10	0.78	4.18	1.07

*Based on H=0.95 m

Table based on 200 mm floor slab, no deduction for pipe openings, 180 mm curb openings, and curb type giving highest quantity of concrete. No deductions or adjustments are to be made to these quantities because of pipe openings, different floor alternatives, different curb types or different height of curb openings.

STATE OF CALIFORNIA
DEPARTMENT OF TRANSPORTATION

DRAINAGE INLETS

NO SCALE

ALL DIMENSIONS ARE IN MILLIMETERS UNLESS OTHERWISE SHOWN

RSP D72 DATED OCTOBER 26, 2000 SUPERSEDES STANDARD PLAN D72 DATED JULY 1, 1999-PAGE 94 OF THE STANDARD PLANS BOOK DATED JULY 1999.

REVISED STANDARD PLAN RSP D72

DIST	COUNTY	ROUTE	KILOMETER POST TOTAL PROJECT	SHEET NO.	TOTAL SHEETS

REGISTERED CIVIL ENGINEER

October 26, 2000
PLANS APPROVAL DATE

Glenn DeCou No. C34547 Exp. 9-30-03 CIVIL STATE OF CALIFORNIA REGISTERED PROFESSIONAL ENGINEER

The State of California or its officers or agents shall not be responsible for the accuracy or completeness of electronic copies of this plan sheet.

Caltrans Metric

1999 REVISED STD. PLAN RSP D72

DESIGN NOTES

Specifications:
Design:
Bridge Design Specification (1983 AASHTO Specifications with revisions by Caltrans)
Load Factors: 1.5 D + 1.5 E + 2.5 (L + I)
Where D=Dead Load
E=Earth Load
L=Live Load
I=Impact
Capacity reduction factor is included.

Loading:
Live load:
HS20-44 truck
Apply impact only to the roof slab.

Earth Cover (mm)	Impact (%)
Up to 300	30
301 to 600	20
601 to 900	10
Over 900	0

No surcharge on walls due to live load.
Earth load:
Earth pressures for two conditions:
22.0 kPa/m vertical, 6.6 kPa/m horizontal.
22.0 kPa/m vertical, 22.0 kPa/m horizontal.

Unit stresses:
f'_c = 25 MPa
f_y = 400 MPa

Distribution "d" bars:
Up to and including 3.0 m cover
Expressed as a percent of main positive reinforcement required: $\frac{100}{0.05726\sqrt{S}}$, max 50%.
Over 3.0 m cover
#13 @ 450 mm maximum.

Shear:
Maximum allowable shear, $V_c = 0.29\sqrt{f'_c}$, MPa

Exclusions:
Compressive reinforcement and negative-moment reduction (for continuity) do not apply.
Axial loading on members has not been considered.

CONSTRUCTION NOTES

Construction loads:
Strutting required as shown on Standard Plan D88.
Strutting may be required on culvert extensions when existing parapet is removed.

Expansion joints:
Invert:
No expansion joints shall be permitted.

Roof and Walls:
When cover is less than span length-
Place 13 mm expansion joint filler at 9 m± centers outside the paved roadway lanes and place Bridge Detail 3-2, Standard Plan B0-3, at 9 m centers under paved roadway lanes.
When cover is more than span length-
Place 13 mm expansion joint filler at 9 m± centers and additional 13 mm expansion joints at locations of change in foundation character, as directed by the Engineer.

Construction joints:
Temporary joints may be permitted if normal (or radial) to ℄ of RCB. Otherwise, the contractor is to submit a proposal for consideration.

Cutoff walls:
1.2 m cutoff walls are to be provided at inlet and/or outlet unless adjacent channel is lined and unless otherwise shown. These walls are to be extended if scour conditions warrant.

Earthwork:
See Standard Plan A62E.

Backfill:
See Standard Specifications, except that the difference in level of backfill (against outside walls) shall not exceed 600 mm.

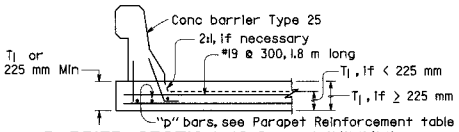

BARRIER SECTION (9.0 m MINIMUM)

GENERAL NOTES

Designation:
Standard single or multiple box culverts are shown on plans as span times height with maximum cover over roof thus: 2440 mm x 1520 mm RCB with 3 m or DBL 3050 mm x 1520 mm RCB with 6 m, followed by alternatives.

Alternatives:
Single cell: invert will be sloped unless "trapezoidal invert", "flat invert" or "V invert" is included in designation
Multiple cell: invert will be vee unless "flat invert" is specified. Ends of culvert will be rounded unless "square ends" are designated. Parapets will be as shown unless designated in plans. Such designations may be different for inlet and outlet ends.

Quantities:
Quantities are for the sloped or vee invert and do not include "d" bars, nor splices in longitudinal bars, nor temperature reinforcement for exposed roof, nor concrete or reinforcement for parapets, cutoff walls or paving notches.

Reinforcement placement:
Main reinforcement is to be placed transverse or, for curved culverts, radial. When radial, reinforcing spacing of the "a", "f" and "g" bars is measured along the centerline. Stagger splices not shown. Hooks may be rotated or tilted, as necessary, for clearance.

Special reinforcement coverage:
Box standard plans are not to be used for culverts in a corrosive environment or where there is a severe abrasive flow condition or in freeze-thaw locations.

Special design:
Required for culverts with conditions, loads, design bearing pressures or sizes greater than those given on this plan or Standard Plans D80 & D81. Also required for multiple cell culverts with unequal spans. For culverts with railroad loading, see the current AREA design specification.

3 or more cells:
For culverts with more than two cells, use dimensions and reinforcement for the standard "double box culvert" and adjust quantities accordingly.

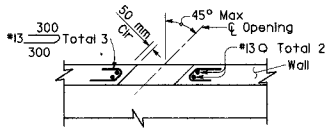

PART PLAN-SECTION

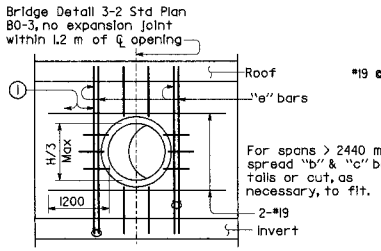

LONGITUDINAL SECTION

UTILITY OPENING-WALL

H= Height of box

(1) Adjacent to each side of the opening, place additional bars aquivalent to half the interrupted main reinforcement.

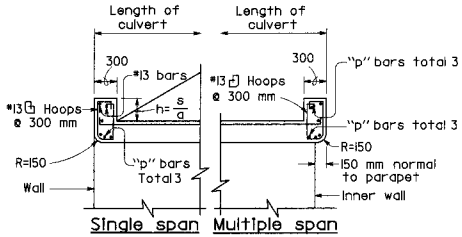

Single span Multiple span

PARAPET DETAIL

s = Clear span (mm)
a = 12 cosine skew angle

Span \ Skew Angle	0° TO 15°	16° TO 30°	31° TO 45°
1220 mm	#13	#13	#13
1830 mm	#13	#13	#16
2440 mm	#13	#16	#19
3050 mm	#16	#19	#22
3660 mm	#19	#22	#25
4270 mm	#22	#25	#29

PARAPET REINFORCEMENT

Height \ Cover	3 m	6 m
1830 mm	95	150
2440 mm	105	160
3050 mm	115	170
3660 mm	125	180
4270 mm	135	190

DESIGN BEARING PRESSURE (kPa)

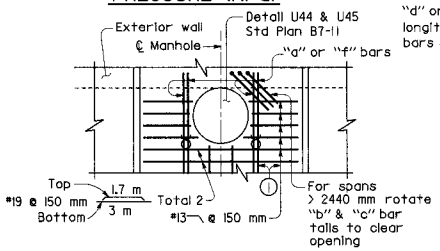

PART PLAN

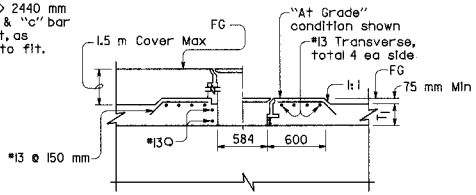

PART LONGITUDINAL SECTION

MANHOLE

Place a 13 mm expansion Jt a max of 2 times span or height from

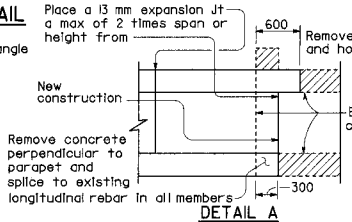

DETAIL A

(20° maximun skew as shown. If existing longitudinal and transverse reinforcing bars in top slab are lap spliced with new longitudinal and transverse reinforcing bars, the 20° skew may be exceeded. Lap splicing may require removal of top slab in excess of 600 mm shown.

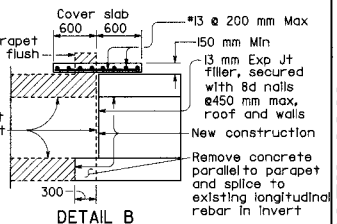

DETAIL B

(Single cell only, no skew allowed, 300 mm minimum cover.)

CULVERT EXTENSION

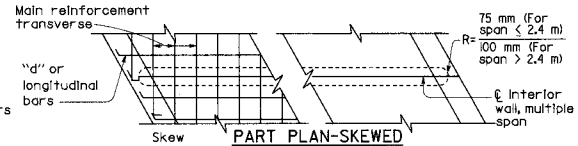

PART PLAN-SKEWED

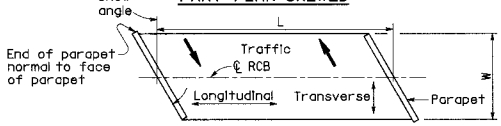

RCB TERMINOLOGY

Caltrans Metric

DIST	COUNTY	ROUTE	KILOMETER POST TOTAL PROJECT	SHEET NO.	TOTAL SHEETS

Paul Cotter
REGISTERED CIVIL ENGINEER
October 26, 2000
PLANS APPROVAL DATE
REGISTERED PROFESSIONAL ENGINEER Paul Cotter No. C34509 Exp. 9-30-03 CIVIL STATE OF CALIFORNIA

The State of California or its officers or agents shall not be responsible for the accuracy or completeness of electronic copies of this plan sheet.

To accompany plans dated _____

STATE OF CALIFORNIA
DEPARTMENT OF TRANSPORTATION

CAST-IN-PLACE REINFORCED CONCRETE CULVERT MISCELLANEOUS DETAILS

NO SCALE

ALL DIMENSIONS ARE IN MILLIMETERS UNLESS OTHERWISE SHOWN

RSP D82 DATED OCTOBER 26, 2000 SUPERSEDES STANDARD PLAN D82 DATED JULY 1, 1999-PAGE 109 OF THE STANDARD PLANS BOOK DATED JULY 1999.

REVISED STANDARD PLAN RSP D82

1999 REVISED STD. PLAN RSP D82

DIST	COUNTY	ROUTE	KILOMETER POST TOTAL PROJECT	SHEET NO.	TOTAL SHEETS

Paul Cotter
REGISTERED CIVIL ENGINEER

October 26, 2000
PLANS APPROVAL DATE

REGISTERED PROFESSIONAL ENGINEER Paul Cotter No. C34509 Exp. 9-30-03 CIVIL STATE OF CALIFORNIA

The State of California or its officers or agents shall not be responsible for the accuracy or completeness of electronic copies of this plan sheet.

To accompany plans dated

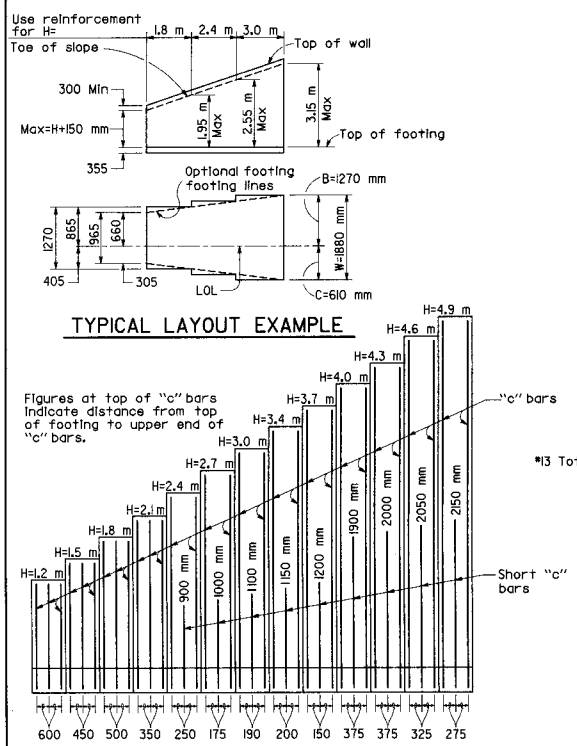

TYPICAL LAYOUT EXAMPLE

NOTE

Where 1:1.5 surcharge exceeds 1.5 m, use Type 2 retaining wall.

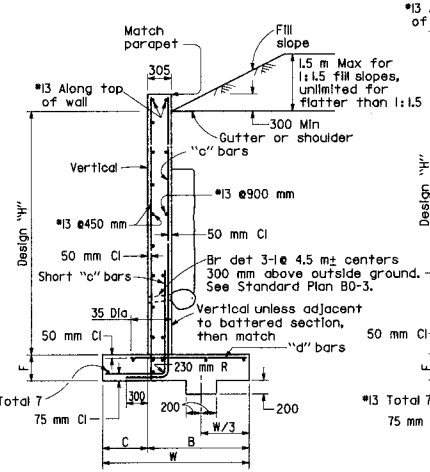

TYPICAL SECTION
H=1.2 m THRU 3.7 m

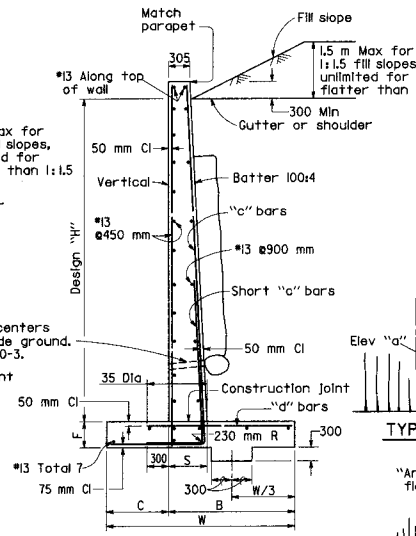

TYPICAL SECTION
H=4.0 m THRU 4.9 m

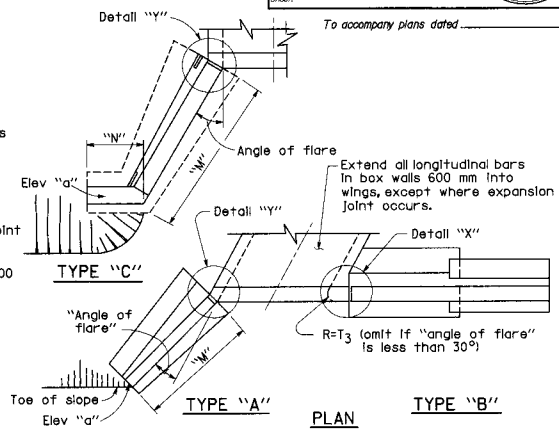

Where design "H" exceeds 2.7 m or length of wingwall exceeds 1.5 "H", place 13 mm exp joint filler at junction of box and wall.

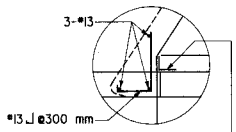

DETAIL "X"

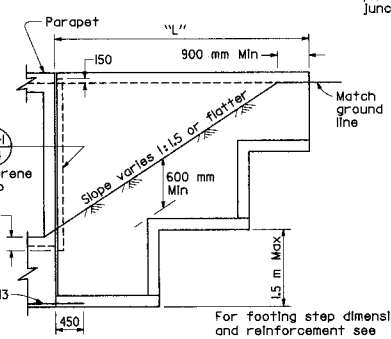

ELEVATION

For footing step dimensions and reinforcement see "Footing Step" on Std Plan B3-8.

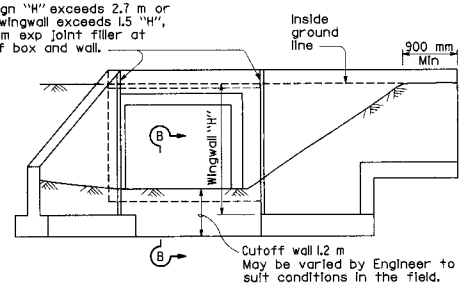

END ELEVATION

TYPE "A" TYPE "B"

STRAIGHT WINGWALLS

REINFORCED CONCRETE WINGWALLS

"H" (m)	1.2	1.5	1.8	2.1	2.4	2.7	3.0	3.4	3.7	4.0	4.3	4.6	4.9
W (mm)	965	1120	1270	1420	1575	1730	1880	2030	2185	2335	2490	2640	2795
C (mm)	305	355	405	455	510	560	610	660	710	760	815	865	915
B (mm)	660	765	865	965	1065	1170	1270	1370	1475	1575	1675	1775	1880
F (mm)	355												
Batter	None									4:100			
S (mm)	305	305	305	305	305	305	305	305	305	465	475	490	500
"c" Bars	*13@600	*13@450	*16@500	*16@350	@16@250	*16@175	*19@190	*22@200	*22@150	*29@375	*32@375	*32@325	*32@275
"d" Bars	*13@600	*13@450	*16@500	*16@350	@16@250	*19@350	*22@380	*25@400	*22@300	*25@375	*29@375	*29@325	*29@275
Conc m^3/m	0.80	0.95	1.10	1.23	1.38	1.53	1.68	1.83	1.98	2.56	2.76	2.96	3.16
Reinf kg/m	19	24	28	37	45	55	73	92	113	109	134	155	186

Quantities do not include that portion above the design "H" limit.

NOTES

Unit Stresses: f_s=165 MPa, f_c=9 MPa, n=10

Maximum Toe Pressure = 140 kPa

Elevations, length and angle of flare of wings may be varied by the Engineer to suit conditions encountered in the field. Walls designed for 600 mm liveload surcharge, 1:1.5 sloping surcharge not to exceed 1.5 m in elevation plus 600 mm liveload surcharge, or unlimited 1:2 surcharge.

Dimensions "H","L","M","N", Elevation "a" and "Angle of flare" (as apply) are shown on the plans.

Wall height may be exceeded by 150 mm before going to next greater "H".

Eliminate cutoff wall if adjacent channel is paved and skew is 20° maximum.

For wall offset values, see Standard Plan B3-8.

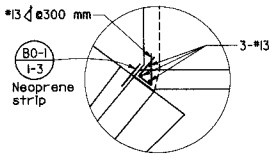

DETAIL "Y"

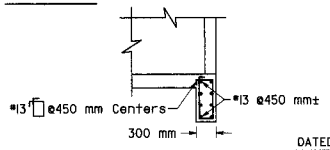

SECTION B-B

STATE OF CALIFORNIA
DEPARTMENT OF TRANSPORTATION

BOX CULVERT WINGWALLS TYPES A, B AND C

NO SCALE

ALL DIMENSIONS ARE IN MILLIMETERS UNLESS OTHERWISE SHOWN

RSP D84 DATED OCTOBER 26, 2000 SUPERSEDES STANDARD PLAN D84 DATED JULY 1, 1999-PAGE 110 OF THE STANDARD PLANS BOOK DATED JULY 1999.

REVISED STANDARD PLAN RSP D84

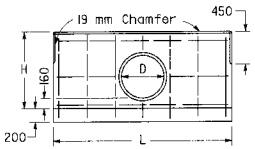

FRONT ELEVATION
SINGLE HEADWALL

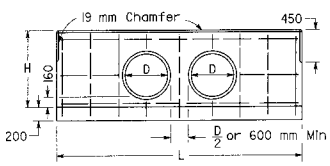

FRONT ELEVATION
DOUBLE HEADWALL

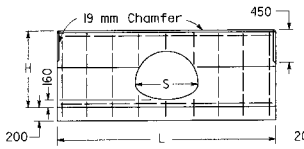

FRONT ELEVATION
SINGLE HEADWALL

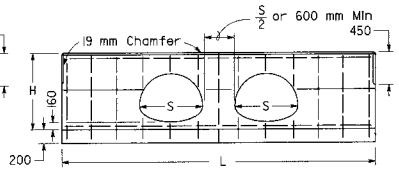

FRONT ELEVATION
DOUBLE HEADWALL

D	H	SINGLE			DOUBLE		
		L	Steel	Conc	L	Steel	Conc
mm	mm	mm	kg	m^3	mm	kg	m^3
300	810	1500	16	0.45	2500	24	0.74
375	885	1800	18	0.56	2950	28	0.91
450	960	2100	22	0.68	3250	34	1.04
525	1035	2250	26	0.76	3550	40	1.18
600	1110	2550	34	0.90	3850	46	1.32
675	1185	2850	38	1.04	4300	52	1.53
750	1260	3000	40	1.13	4600	54	1.69
825	1335	3300	44	1.29	4900	58	1.86
900	1410	3600	46	1.46	5200	66	2.03
975	1485	3750	58	1.57	5500	78	2.21
1050	1560	4050	62	1.75	5800	84	2.39
1125	1635	4350	66	1.94	6100	88	2.58
1200	1710	4500	70	2.06	6400	90	2.78
1275	1785	4800	80	2.26	6850	102	3.06
1350	1860	5100	84	2.47	7150	108	3.27

STRAIGHT HEADWALLS

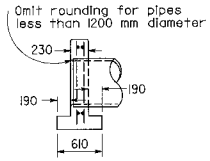

SECTION, SINGLE &
DOUBLE HEADWALLS

CMP ARCH SIZE	SINGLE				DOUBLE		
	H	L	Steel	Conc	L	Steel	Conc
mm	mm	mm	kg	m^3	mm	kg	m^3
530x380	885	2000	20	0.61	3000	28	0.91
610x460	960	2300	22	0.74	3500	32	1.10
710x510	1010	2600	28	0.85	4100	40	1.32
885x610	1110	3200	38	1.11	4700	54	1.58
1060x740	1235	3800	50	1.40	5500	66	1.95
1240x840	1335	4400	58	1.70	6400	78	2.37
1440x970	1460	5200	70	2.13	7450	96	2.91
1620x1100	1585	5800	80	2.50	8200	104	3.36
1800x1200	1685	6400	88	2.89	9100	116	3.88

STRAIGHT HEADWALLS

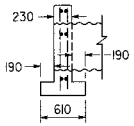

SECTION, SINGLE &
DOUBLE HEADWALLS

NOTES

1. No deduction made in quantities for thickness of pipe walls.
2. All reinforcing steel #13 bars. All vertical and horizontal tie bars 450 mm maximum spacing.
3. Length of wall "W" may be varied to suit conditions encountered in the field, and straight line interpolation may be used to calculate quantities.
4. Quantities are for design purposes only.
5. Cable railing to be installed on top of headwall when shown on Project Plans. See Standard Plan B11-47 for cable railing details.

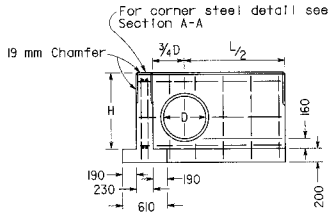

FRONT ELEVATION "L" HEADWALL

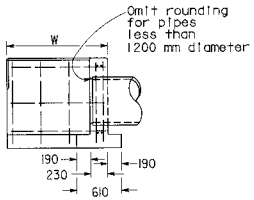

SECTION "L" HEADWALL

D	H	L/2	LENGTH OF W									
			1000		1450		1900		2350		2800	
			Steel	Conc	Steel	Conc	Steel	Conc	Steel	Conc	Steel	Conc
mm	mm	mm	kg	m^3	kg	m^3	kg	m^3	kg	m^3	kg	m^3
300	810	750	22	0.59	26	0.73	—	—	—	—	—	—
375	885	900	24	0.68	28	0.83	—	—	—	—	—	—
450	960	1050	28	0.78	32	0.94	—	—	—	—	—	—
525	1035	1125	32	0.86	40	1.02	—	—	—	—	—	—
600	1110	1275	38	0.96	44	1.13	48	1.30	—	—	—	—
675	1185	1425	40	1.07	46	1.25	50	1.43	—	—	—	—
750	1260	1500	42	1.16	48	1.34	52	1.53	60	1.72	—	—
825	1335	1650	46	1.28	52	1.47	60	1.67	66	1.86	—	—
900	1410	1800	48	1.40	54	1.61	62	1.81	68	2.01	74	2.21
975	1485	1875	—	—	66	1.71	74	1.92	80	2.13	88	2.33
1050	1560	2025	—	—	68	1.85	76	2.07	84	2.28	92	2.50
1125	1635	2175	—	—	—	—	78	2.22	88	2.45	94	2.67
1200	1710	2250	—	—	—	—	84	2.34	94	2.57	100	2.81
1275	1785	2400	—	—	—	—	—	—	96	2.75	102	2.98
1350	1860	2550	—	—	—	—	—	—	102	2.92	110	3.17

"L" HEADWALLS

CIRCULAR PIPE CULVERT HEADWALLS

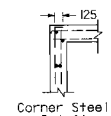

SECTION A-A

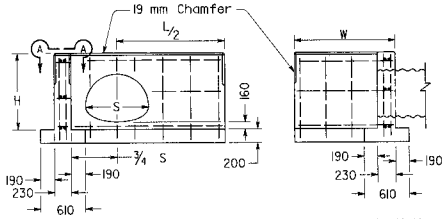

FRONT ELEVATION
"L" HEADWALL

SECTION "L"
HEADWALL

CMP ARCH SIZE	H	LENGTH OF W											
		L/2	1000		1450		1900		2350		2800	
			Steel	Conc	Steel	Conc	Steel	Conc	Steel	Conc	Steel	Conc
mm	mm	mm	kg	m^3	kg	m^3	kg	m^3	kg	m^3	kg	m^3
530x380	885	1000	26	0.74	30	0.89	34	1.04	40	1.18	44	1.33
610x460	960	1150	28	0.84	32	1.00	36	1.15	42	1.30	50	1.46
710x510	1010	1300	32	0.93	36	1.09	40	1.25	44	1.41	52	1.57
885x610	1110	1600	44	1.13	50	1.30	54	1.47	62	1.64	70	1.81
1060x740	1235	1900	52	1.36	58	1.54	62	1.72	70	1.90	76	2.09
1240x840	1335	2200	58	1.58	64	1.77	70	1.96	76	2.16	82	2.35
1440x970	1460	2600	64	1.89	72	2.09	78	2.30	84	2.51	92	2.71
1620x1100	1585	2900	84	2.16	90	2.38	96	2.60	104	2.82	112	3.04
1800x1200	1685	3200	90	2.44	96	2.66	104	2.89	112	3.12	120	3.35

"L" HEADWALLS

CORRUGATED METAL PIPE ARCH CULVERT HEADWALLS

Caltrans Metric

DIST	COUNTY	ROUTE	KILOMETER POST TOTAL PROJECT	SHEET NO.	TOTAL SHEETS

REGISTERED CIVIL ENGINEER

October 26, 2000
PLANS APPROVAL DATE

REGISTERED PROFESSIONAL ENGINEER Glenn DeCou No. C34547 Exp. 9-30-03 CIVIL STATE OF CALIFORNIA

The State of California or its officers or agents shall not be responsible for the accuracy or completeness of electronic copies of this plan sheet.

To accompany plans dated _____

STATE OF CALIFORNIA
DEPARTMENT OF TRANSPORTATION

PIPE HEADWALLS

NO SCALE

ALL DIMENSIONS ARE IN
MILLIMETERS UNLESS OTHERWISE SHOWN

RSP D89 DATED OCTOBER 26, 2000 SUPERSEDES STANDARD PLAN D89
DATED JULY 1, 1999-PAGE 121 OF THE STANDARD PLANS BOOK DATED JULY 1999.

REVISED STANDARD PLAN RSP D89

1999 REVISED STD. PLAN RSP D89

20

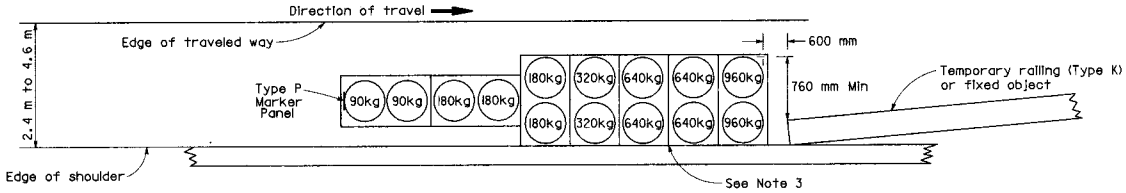

ARRAY 'TS14'

Approach speed 100 km/h or less
See Note 9

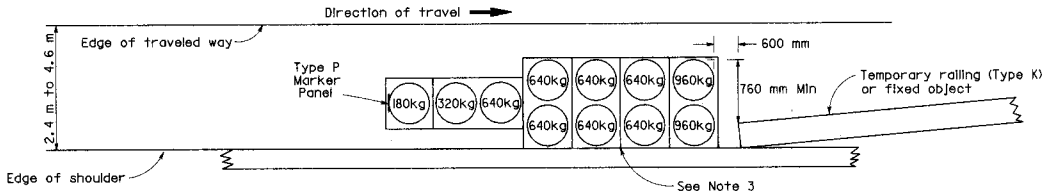

ARRAY 'TS11'

Approach speed 70 km/h or less
See Note 9

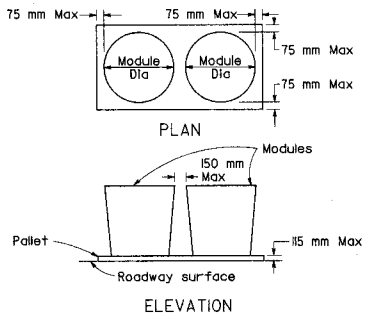

CRASH CUSHION PALLET DETAIL

Caltrans Metric

DIST	COUNTY	ROUTE	KILOMETER POST TOTAL PROJECT	SHEET NO.	TOTAL SHEETS

REGISTERED CIVIL ENGINEER

October 26, 2000
PLANS APPROVAL DATE

The State of California or its officers or agents shall not be responsible for the accuracy or completeness of electronic copies of this plan sheet.

REGISTERED PROFESSIONAL ENGINEER
Roy A. Peterson
No. C47715
Exp. 12-31-03
CIVIL
STATE OF CALIFORNIA

To accompany plans dated _____

NOTES

1. (XXX) indicates sand filled module location and mass of sand in kilograms for each module. Module spacing is based on the greater diameter of the module.
2. All sand masses are nominal.
3. The temporary crash cushion arrays shown on this plan shall be used only in locations where there will be traffic on one side of the temporary crash cushion array.
4. If the fixed object or approach end of the temporary railing is less than 4.60 meters from the edge of traveled way, a temporary crash cushion is required.
5. Temporary crash cushion arrays shall not encroach on the traveled way.
6. Arrays for median shoulders shall conform to details shown on this plan for outside shoulders.
7. Place the Type P marker panel so that the bottom of the panel rest upon the pallet and faces traffic.
8. Refer to Standard Plan A73B for marker details.
9. For shoulder widths less than 2.4 m, appropriate approved crash cushion protection, other than sand filled modules, shall be provided at fixed objects and at approach ends of temporary railing. The specific type of crash cushion shall be as shown on the project plans or as specified in the Special Provisions, or if not shown on the project plans or specified in the Special Provisions, shall be as approved by the Engineer.
10. Approach speeds indicated conform to NCHRP 350 Report criteria.

STATE OF CALIFORNIA
DEPARTMENT OF TRANSPORTATION

TEMPORARY CRASH CUSHION, SAND FILLED (SHOULDER INSTALLATIONS)

NO SCALE

ALL DIMENSIONS ARE IN MILLIMETERS UNLESS OTHERWISE SHOWN

RSP T2 DATED OCTOBER 26, 2000 SUPERSEDES STANDARD PLAN T2 DATED JULY 1, 1999-PAGE 157 OF THE STANDARD PLANS BOOK DATED JULY 1999.

REVISED STANDARD PLAN RSP T2

DIST	COUNTY	ROUTE	KILOMETER POST TOTAL PROJECT	SHEET NO.	TOTAL SHEETS

Caltrans Metric

REGISTERED CIVIL ENGINEER

October 26, 2000
PLANS APPROVAL DATE

REGISTERED PROFESSIONAL ENGINEER Overcomer Y. Hor No. C45803 Exp. 12-31-02 CIVIL STATE OF CALIFORNIA

The State of California or its officers or agents shall not be responsible for the accuracy or completeness of electronic copies of this plan sheet.

To accompany plans dated _____

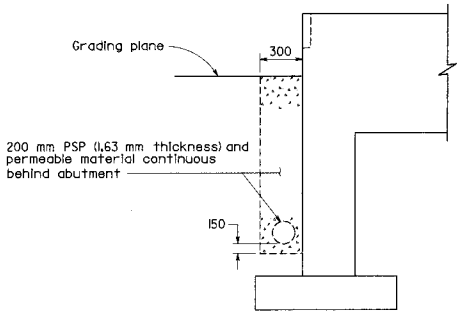

200 mm PSP AND PERMEABLE MATERIAL
BRIDGE DETAIL 3-5

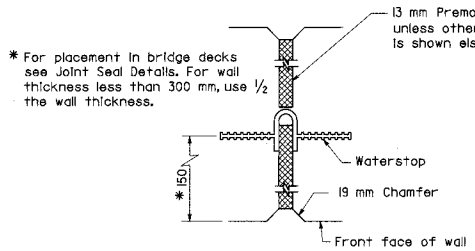

WALL EXPANSION JOINT
BRIDGE DETAIL 3-4

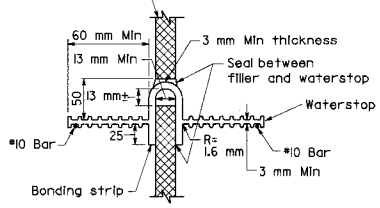

WATERSTOP
BRIDGE DETAIL 3-6

NOTES

Holes will be permitted in the outer 13 millimeters of the web for wire, rings, etc. Tie web to #10 reinforcing bars @ 400 millimeters maximum intervals to support the waterstop in proper position during concrete placement. Alternative detail may be submitted for approval of the Engineer.

Waterstop to have 5 or more pairs of of raised ribs to provide 65 square millimeters minimum rib cross-section area on each half of the waterstop.

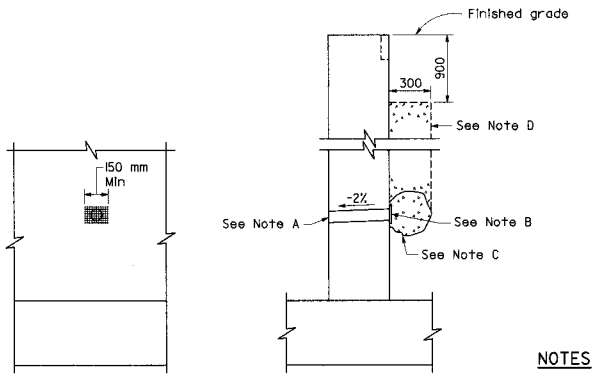

ELEVATION SECTION
WEEP HOLE AND PERVIOUS BACKFILL
BRIDGE DETAIL 3-1

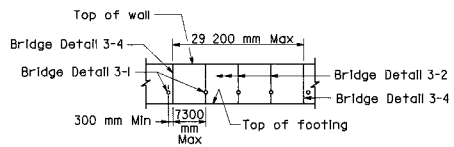

WALL EXPANSION JOINTS
AND WEAKENED PLANES
BRIDGE DETAIL 3-3

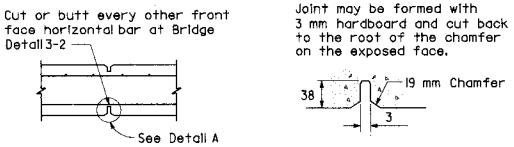

SECTION DETAIL A
WEAKENED PLANES
BRIDGE DETAIL 3-2

NOTES

A. 100 millimeters Ø Drains @ 7600 millimeters maximum center to center (2750 millimeters center to center for Type 3 and 2800 millimeters center to center for Type 4 retaining walls). For walls adjacent to sidewalks or curbs, provide 100 millimeters plastic pipe under the sidewalk to discharge thru curb face. Exposed wall drains shall be located 75 millimeters ± above finished grade.

B. 150 millimeters Square aluminum or galvanized steel wire 6 millimeters mesh hardware cloth (minimum wire diameter 0.64 millimeters). Anchor firmly to backface.

C. 0.03 cubic meter pervious backfill material in a nonwoven filter fabric, securely tied.

D. Pervious backfill material continuous behind retaining wall or abutment.

STATE OF CALIFORNIA
DEPARTMENT OF TRANSPORTATION

BRIDGE DETAILS

NO SCALE

ALL DIMENSIONS ARE IN
MILLIMETERS UNLESS OTHERWISE SHOWN

RSP B0-3 DATED OCTOBER 26, 2000 SUPERSEDES STANDARD PLAN B0-3
DATED JULY 1, 1999-PAGE 172 OF THE STANDARD PLANS BOOK DATED JULY 1999.

REVISED STANDARD PLAN RSP B0-3

1999 REVISED STD. PLAN RSP B0-3

DIST	COUNTY	ROUTE	KILOMETER POST TOTAL PROJECT	SHEET NO.	TOTAL SHEETS

Overcomer Y. Hor
REGISTERED CIVIL ENGINEER

October 26, 2000
PLANS APPROVAL DATE

REGISTERED PROFESSIONAL ENGINEER Overcomer Y. Hor No. C45803 Exp. 12-31-02 CIVIL STATE OF CALIFORNIA

The State of California or its officers or agents shall not be responsible for the accuracy or completeness of electronic copies of this plan sheet.

To accompany plans dated _____

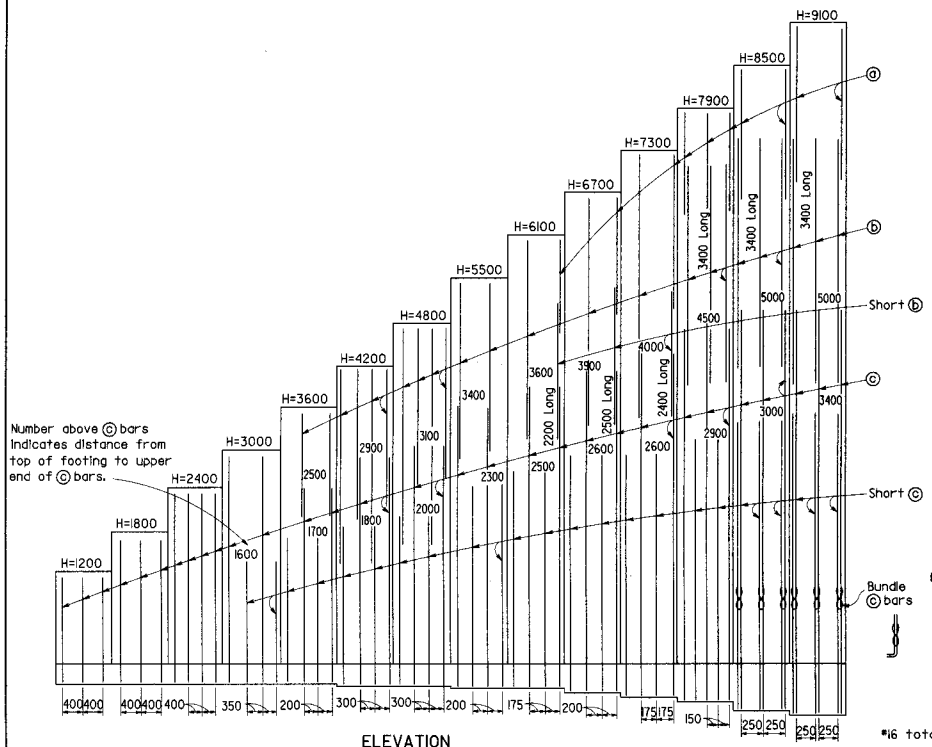

ELEVATION

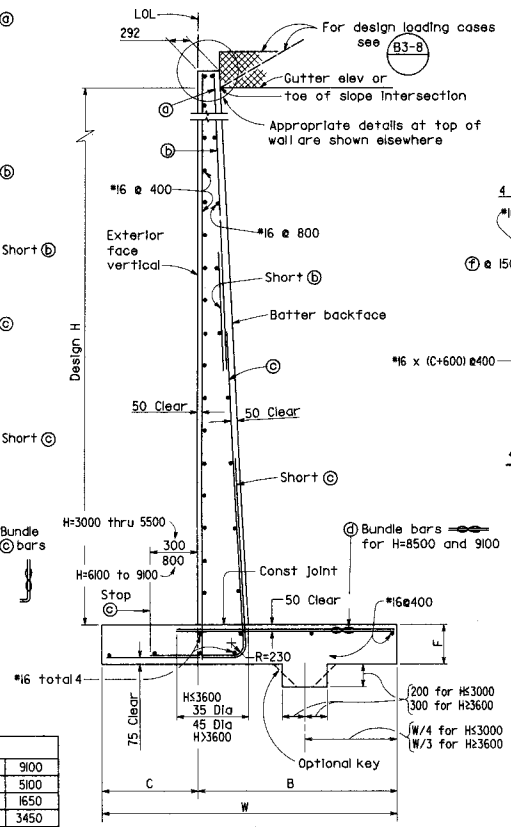

SPREAD FOOTING SECTION

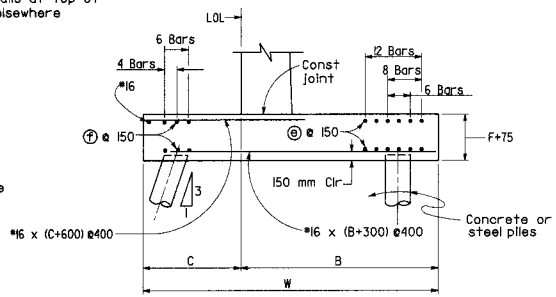

400 kN PILE FOOTING SECTION

Reinforcement detailed is to be placed in addition to that shown for spread footing. All piles not shown, see Pile Layout on other sheets.

TABLE OF REINFORCING STEEL DIMENSIONS AND DATA

Design H		1200	1800	2400	3000	3600	4200	4800	5500	6100	6700	7300	7900	8500	9100
W		1000	1300	1600	1900	2200	2450	2750	3050	3350	3700	4050	4350	4650	5100
C		300	400	500	600	700	800	900	1000	1100	1200	1350	1450	1550	1650
B		700	900	1100	1300	1500	1650	1850	2050	2250	2500	2700	2900	3100	3450
F		400	400	400	400	400	450	450	450	450	500	550	650	750	850
Batter		100:4	100:4	100:4	100:4	100:4	100:4	100:4	100:4	100:4	100:4	100:5	100:6	100:6	100:7
ⓐ	bars	—	—	—	—	—	—	—	—	#16@700	#16@800	#16@700	#16@300	#16@500	#25@500
ⓑ	bars	—	—	—	—	#16@400	#16@300	#16@300	#19@400	#25@350	#25@400	#25@350	#25@300	#25@250	#29@250
ⓒ	bars	#16@400	#16@400	#16@400	#19@350	#19@200	#25@300	#29@300	#29@200	#29@175	#36@200	#36@175	#36@150	#36@250 ⅋	#36@250 ⅋
ⓓ	bars	#16@400	#16@400	#16@400	#16@350	#16@200	#25@300	#29@300	#29@200	#29@175	#36@200	#36@175	#36@150	#36@250 ⅋	#36@250 ⅋
Total ⓔ	bars	6-#19	6-#19	6-#19	12-#19	12-#19	12-#19	12-#19	8-#19	8-#19	8-#19	6-#19	6-#19	6-#19	6-#19
Total ⓕ	bars	—	—	—	6-#19	6-#19	6-#19	6-#19	6-#19	6-#19	6-#19	4-#16	4-#16	4-#16	4-#16
Loading Case I	Toe Pressure kPa	80	90	105	120	135	160	170	190	205	220	235	255	275	300
Loading Case II	Toe Pressure kPa	55	70	95	110	130	160	175	200	225	265	285	310	340	360
Loading Case III	Toe Pressure kPa	65	80	100	120	140	165	180	205	230	260	280	310	345	360

⅋ Denotes a bundle of 2 bars

NOTES

1. For details not shown and drainage notes see B3-8
2. For wall stem joint details see B0-3 3-3 and B0-3 3-4
3. For pile footing for design H=1200 use same footing dimensions as for design H=1800.

STATE OF CALIFORNIA
DEPARTMENT OF TRANSPORTATION

RETAINING WALL TYPE 1 H=1200 THROUGH 9100 mm

NO SCALE

ALL DIMENSIONS ARE IN MILLIMETERS UNLESS OTHERWISE SHOWN

RSP B3-1 DATED OCTOBER 26, 2000 SUPERSEDES STANDARD PLAN B3-1 DATED JULY 1, 1999-PAGE 182 OF THE STANDARD PLANS BOOK DATED JULY 1999.

REVISED STANDARD PLAN RSP B3-1

DIST	COUNTY	ROUTE	KILOMETER POST TOTAL PROJECT	SHEET NO.	TOTAL SHEETS

Caltrans Metric

REGISTERED CIVIL ENGINEER

October 26, 2000
PLANS APPROVAL DATE

REGISTERED PROFESSIONAL ENGINEER Overcomer Y. Har No. C45803 Exp. 12-31-02 CIVIL STATE OF CALIFORNIA

The State of California or its officers or agents shall not be responsible for the accuracy or completeness of electronic copies of this plan sheet.

To accompany plans dated _____

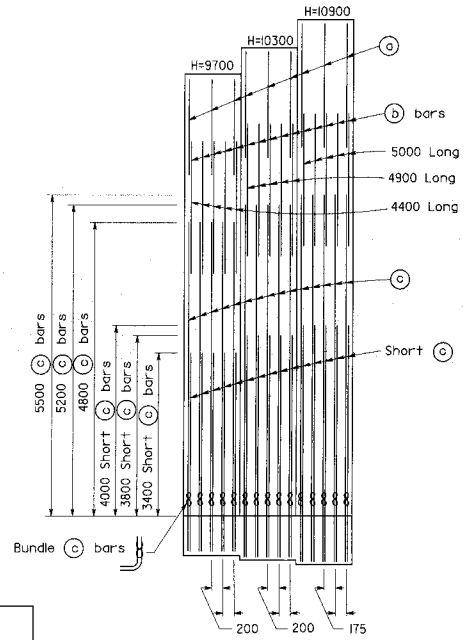

ELEVATION

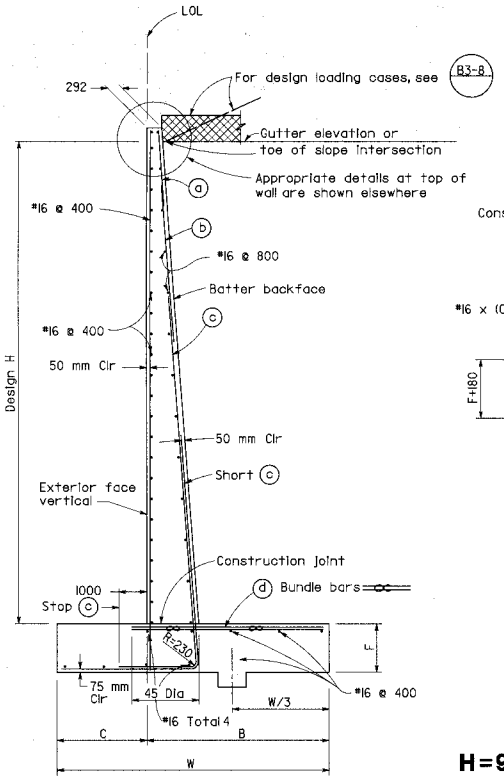

SPREAD FOOTING SECTION

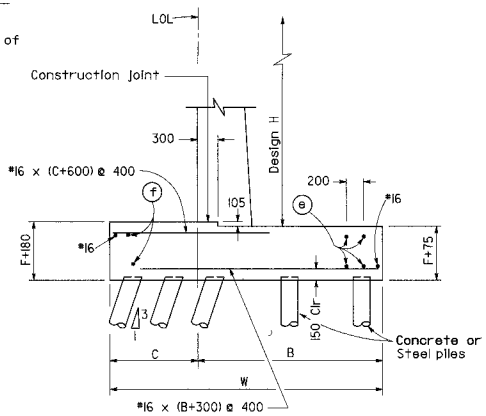

400 kN PILE FOOTING SECTION

Reinforcement detailed is to be placed in addition to that shown for spread footing. See Pile Layout on other sheets.

TABLE OF REINFORCING STEEL, DIMENSIONS AND DATA				
Design H		9700	10300	10900
W		5600	5900	6200
C		1800	1900	2000
B		3800	4000	4200
F Spread Footing		1000	1100	1200
Batter		100:8	100:8	100:8
ⓐ bars		#19@400	#19@400	#19@350
ⓑ bars		#29@200	#29@200	#29@175
ⓒ bars		#36@200 ∞	#36@200 ∞	#36@175 ∞
ⓓ bars		#29@200 ∞	#29@200 ∞	#29@175 ∞
Total ⓔ bars		6-#19	6-#19	6-#19
Total ⓕ bars		4-#16	4-#16	4-#16
Loading Case I	H Comp kN	110	125	140
	V Comp kN	265	300	330
	Toe Pr. kPa	300	325	350
Loading Case II	H Comp kN	165	185	210
	V Comp kN	365	410	455
	Toe Pr. kPa	370	400	435
Loading Case III	H Comp kN	130	145	160
	V Comp kN	295	330	370
	Toe Pr. kPa	380	400	425

∞ Denotes a bundle of 2 bars.

NOTES

1. For details not shown and drainage notes see B3-8
2. For wall stem joint details, see B0-3 3-3 and B0-3 3-4
3. At ⓒ and Short ⓒ bars:
   H ≤ 1800 mm, no splices are allowed within 500 mm above the top of footing.
   H > 1800 mm, no splices are allowed within H/4 above the top of footing.

STATE OF CALIFORNIA
DEPARTMENT OF TRANSPORTATION

RETAINING WALL TYPE 1 H=9700 THROUGH 10 900 mm

NO SCALE

ALL DIMENSIONS ARE IN MILLIMETERS UNLESS OTHERWISE SHOWN

RSP B3-2 DATED OCTOBER 26, 2000 SUPERSEDES STANDARD PLAN B3-2 DATED JULY 1, 1999-PAGE 183 OF THE STANDARD PLANS BOOK DATED JULY 1999.

REVISED STANDARD PLAN RSP B3-2

1999 REVISED STD. PLAN RSP B3-2

DIST	COUNTY	ROUTE	KILOMETER POST TOTAL PROJECT	SHEET NO.	TOTAL SHEETS

REGISTERED CIVIL ENGINEER

October 26, 2000

PLANS APPROVAL DATE

The State of California or its officers or agents shall not be responsible for the accuracy or completeness of electronic copies of this plan sheet.

REGISTERED PROFESSIONAL ENGINEER Overcomer Y. Hor No. C45803 Exp. 12-31-02 CIVIL STATE OF CALIFORNIA

To accompany plans dated _____

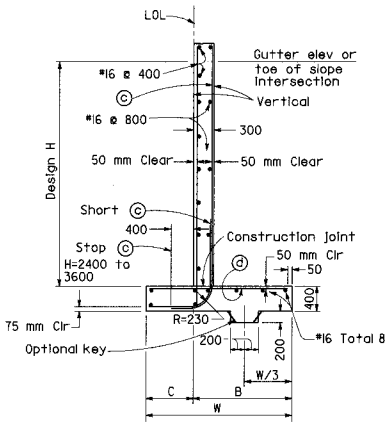

SPREAD FOOTING SECTION

Place concrete in toe, against undisturbed material, except as permitted by the Engineer.

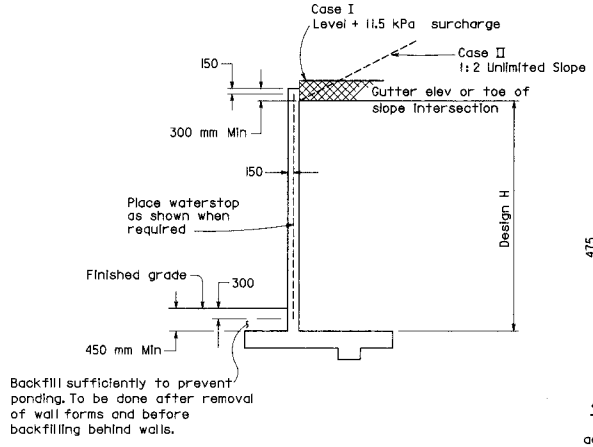

DESIGN

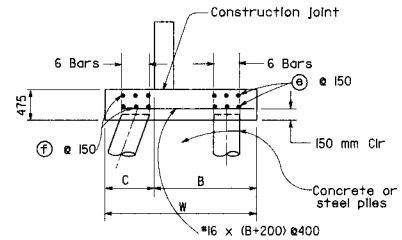

400 kN PILE FOOTING SECTION

Reinforcement detailed is to be placed in addition to that shown for spread footing. All piles not shown, see Pile Layout on other sheets. For pile footing for Design H=1200 use same footing dimensions as for Design H=1800.

TABLE OF REINFORCING STEEL, DIMENSIONS AND DATA					
Design H	1200	1800	2400	3000	3600
W	1000	1300	1600	1900	2200
C	300	400	500	600	700
B	700	900	1100	1300	1500
c bars	#16@400	#16@400	#16@200	#19@200	#25@200
d bars	#16@400	#16@400	#16@400	#16@200	#19@200
Total e bars	6-#19	6-#19	6-#19	6-#25	6-#25
Total f bars	—	—	—	6-#19	6-#19
Case I-Toe Press. kPa	75	95	110	125	135
Case II-Toe Press. kPa	50	70	90	110	130

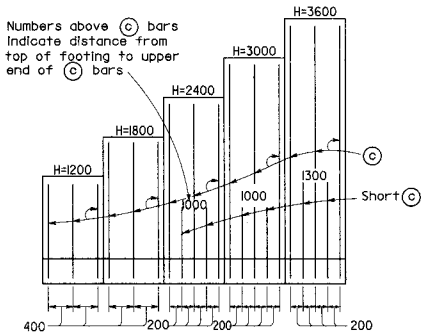

ELEVATION

NOTES

1. Retaining Wall Type 1A designed for Design Loading Cases I and II only.
2. For design notes, drainage notes and other details, See B3-8.
3. For wall stem joint details, see B0-3 3-3 and B0-3 3-4.
4. At c and Short c bars:
   H ≤ 1800 mm, no splices are allowed within 500 mm above the top of footing.
   H > 1800 mm, no splices are allowed within H/4 above the top of footing.

STATE OF CALIFORNIA
DEPARTMENT OF TRANSPORTATION

RETAINING WALL TYPE 1A

NO SCALE

ALL DIMENSIONS ARE IN MILLIMETERS UNLESS OTHERWISE SHOWN

RSP B3-3 DATED OCTOBER 26, 2000 SUPERSEDES STANDARD PLAN B3-3 DATED JULY 1, 1999-PAGE 184 OF THE STANDARD PLANS BOOK DATED JULY 1999.

REVISED STANDARD PLAN RSP B3-3

1999 REVISED STD. PLAN RSP B3-3

DIST	COUNTY	ROUTE	KILOMETER POST TOTAL PROJECT	SHEET NO.	TOTAL SHEETS

REGISTERED CIVIL ENGINEER

October 26, 2000
PLANS APPROVAL DATE

REGISTERED PROFESSIONAL ENGINEER Overcomer Y. Hor No. C45803 Exp. 12-31-02 CIVIL STATE OF CALIFORNIA

The State of California or its officers or agents shall not be responsible for the accuracy or completeness of electronic copies of this plan sheet.

To accompany plans dated _____

Caltrans **Metric**

1999 REVISED STD. PLAN RSP B3-4

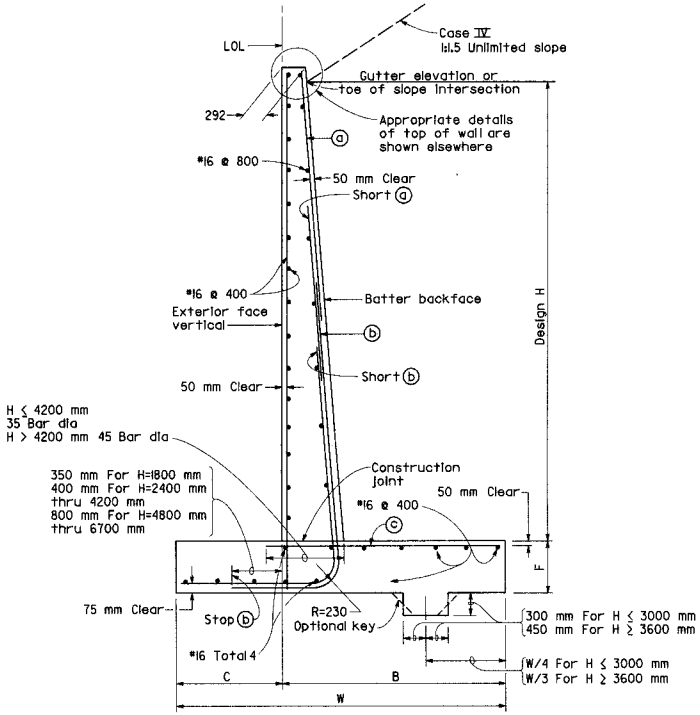

SPREAD FOOTING SECTION

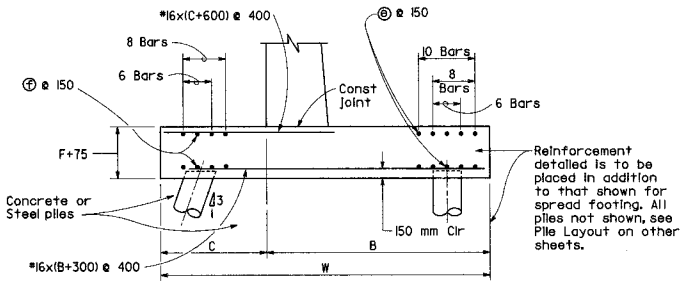

400 kN PILE FOOTING SECTION

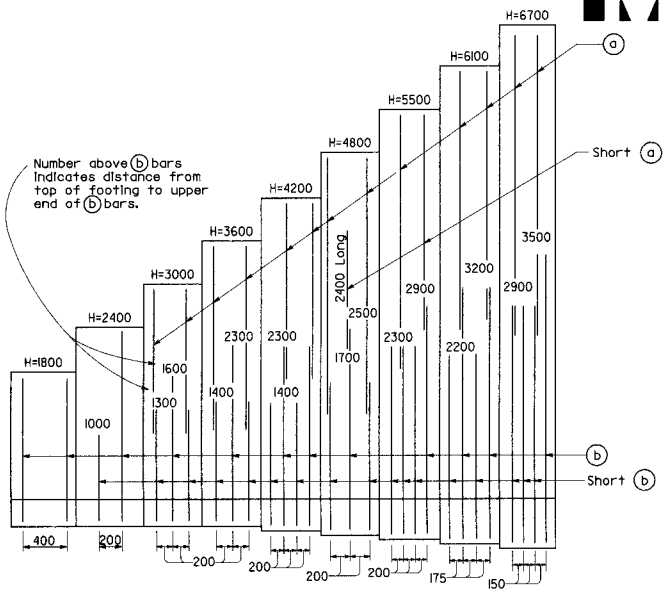

ELEVATION

TABLE OF REINFORCING STEEL, DIMENSIONS AND DATA

Design H	1800	2400	3000	3600	4200	4800	5500	6100	6700
W	1200	1600	2000	2500	3000	3500	4000	4600	5400
C	400	500	550	650	750	850	950	1150	1350
B	800	1100	1450	1850	2250	2650	3050	3450	4050
F	400	400	400	400	450	550	650	750	850
Batter	100:4	100:4	100:4	100:4	100:4	100:4	100:5	100:6	100:7
ⓐ bars			#16@400	#16@400	#19@400	#19@200	#25@400	#25@350	#25@300
ⓑ bars	#16@400	#16@200	#19@200	#25@200	#29@200	#36@200	#36@200	#36@175	#36@150
ⓒ bars	#16@400	#16@400	#19@400	#19@200	#19@200	#25@200	#25@200	#25@175	#25@150
Total ⓔ bars	6-#19	6-#19	8-#25	8-#25	8-#25	8-#25	10-#19	10-#19	10-#19
Total ⓕ bars			8-#19	8-#19	8-#19	8-#19	6-#19	6-#19	6-#19
Toe Press KPa	125	155	185	215	240	275	315	335	335

NOTES

1. For design notes, drainage notes and other details, See (B3-8).
2. For wall stem joint details, see (B0-3 / 3-3) and (B0-3 / 3-4).
3. At ⓑ and Short ⓑ bars:
   H ≤ 1800 mm, no splices are allowed within 500 mm above the top of footing.
   H > 1800 mm, no splices are allowed within H/4 above the top of footing.

STATE OF CALIFORNIA
DEPARTMENT OF TRANSPORTATION

RETAINING WALL TYPE 2

NO SCALE

ALL DIMENSIONS ARE IN
MILLIMETERS UNLESS OTHERWISE SHOWN

RSP B3-4 DATED OCTOBER 26, 2000 SUPERSEDES STANDARD PLAN B3-4
DATED JULY 1, 1999-PAGE 185 OF THE STANDARD PLANS BOOK DATED JULY 1999.

REVISED STANDARD PLAN RSP B3-4

DIST	COUNTY	ROUTE	KILOMETER POST TOTAL PROJECT	SHEET NO.	TOTAL SHEETS

Overcomer T. Har
REGISTERED CIVIL ENGINEER

October 26, 2000
PLANS APPROVAL DATE

REGISTERED PROFESSIONAL ENGINEER Overcomer T. Har No. C45803 Exp. 12-31-02 CIVIL STATE OF CALIFORNIA

The State of California or its officers or agents shall not be responsible for the accuracy or completeness of electronic copies of this plan sheet.

To accompany plans dated _____

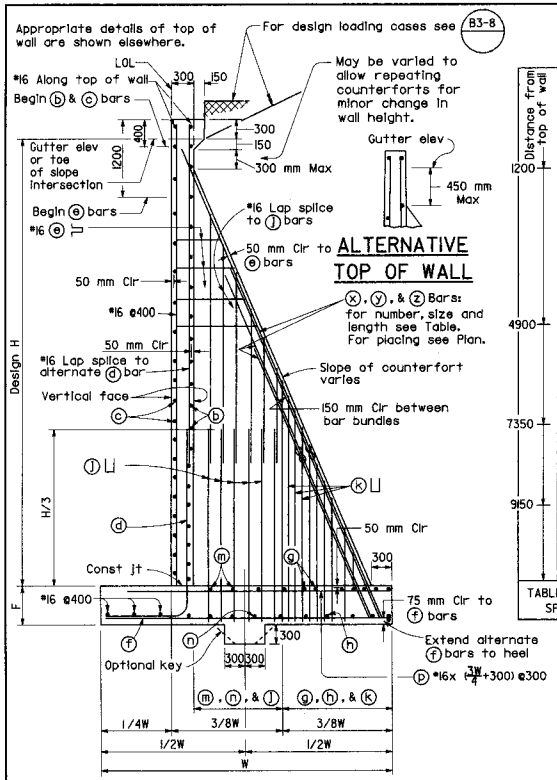

SPREAD FOOTING SECTION

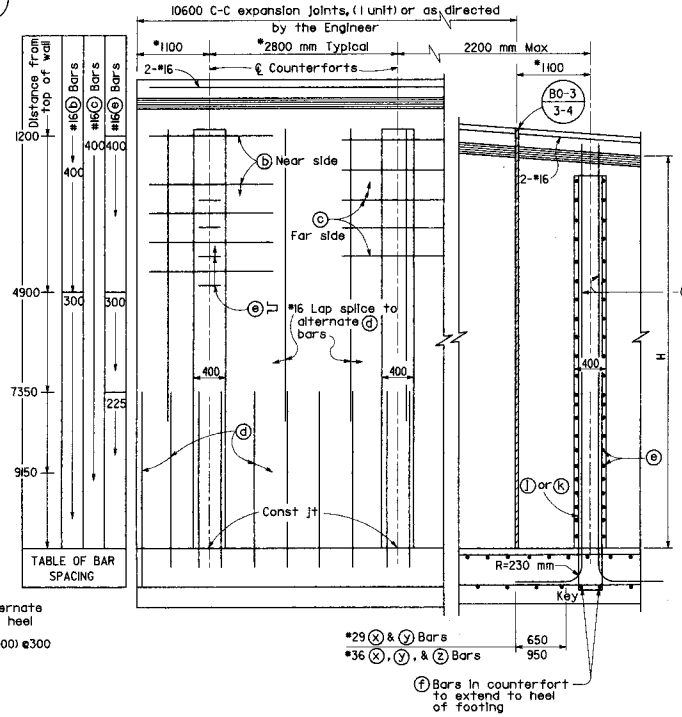

ELEVATION

*Dimensions 2800 mm and 1100 mm may be decreased proportionally but not increased without a special design.

Use footing dimensions and reinforcing and stem reinforcing in any unit as determined by maximum Design "H" in that unit. Use counterfort ⓧ, ⓨ, and ⓩ bars as determined by "H" at ℄ counterfort.

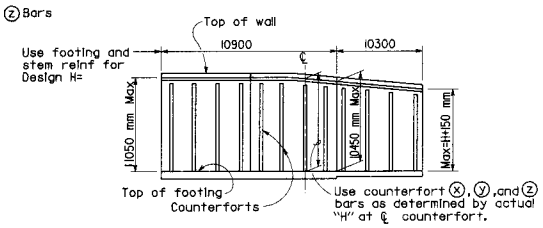

TABLE OF REINFORCING STEEL, DIMENSIONS AND DATA

Design H	5500	6100	6700	7300	7900	8500	9100	9700	10300	10900
W	3500	3800	4100	4450	4750	5050	5350	5650	5950	6250
F	400	400	450	450	500	550	650	700	750	850
ⓓ Bars, counterfort stem	*16@300	*16@300	*16@275	*16@225	*16@200	*16@175	*19@225	*19@200	*25@275	*25@250
ⓕ Bars, bottom toe	*19@300	*19@200	*25@275	*25@225	*25@200	*25@175	*25@225	*25@200	*29@275	*29@250
ⓕ Bars, length } Alt	1700	1900	2100	2400	2500	2600	2700	2800	3000	3100
ⓕ Bars, length } Alt	3350	3650	3950	4300	4600	4900	5200	5500	5800	6100
ⓖ Bars, top of heel	*19@200	—	—	—	—	—	—	—	—	—
ⓗ Bars, bottom heel	*19@200	—	—	—	—	—	—	—	—	—
ⓙ Bars, counterfort heel	*16@400	*16@400	*16@400	*16@350	*16@300	*16@300	*19@400	*19@400	*19@350	*19@350
ⓚ Bars, counterfort heel	*16@200	*16@200	*16@200	*16@175	*16@150	*16@150	*19@200	*19@200	*19@175	*19@175
ⓜ Bars, top of heel	*16@250	—	—	—	—	—	—	—	—	—
ⓝ Bars, bottom of heel	*16@350	—	—	—	—	—	—	—	—	—
ⓧ Bar	2-*29	2-*29	2-*29	2-*29	2-*36	2-*36	2-*36	2-*36	2-*36	2-*36
ⓧ Bar, length	6100	6800	7400	8100	8800	9400	10100	10700	11400	11900
ⓨ Bar	2-*29	2-*29	4-*29	4-*29	4-*36	4-*36	4-*36	4-*36	4-*36	4-*36
ⓨ Bar, length	2900	3700	4400	4900	5500	6300	6900	7600	8100	8500
ⓩ Bar	—	—	—	—	—	—	2-*36	2-*36	2-*36	2-*36
ⓩ Bar, length	—	—	—	—	—	—	3600	3700	4500	5200
Toe Pressure kPa										
Loading Case I	165	180	200	215	235	260	285	305	325	350
Loading Case II	190	210	235	260	290	320	350	380	410	450
Loading case III	200	225	255	280	310	330	350	370	390	415

For H=5500 thru 8500 pile footing, see 400 kN Pile Footing Section.

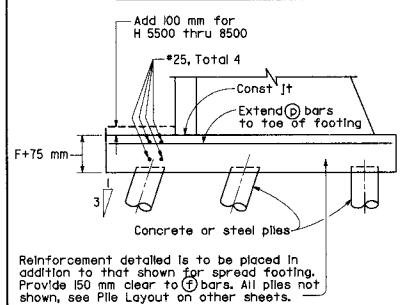

Reinforcement detailed is to be placed in addition to that shown for spread footing. Provide 150 mm clear to ⓕ bars. All piles not shown, see Pile Layout on other sheets.

400 kN PILE FOOTING SECTION

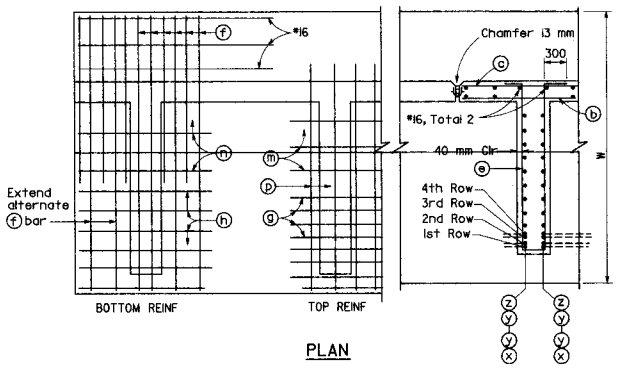

PLAN

NOTE

For design notes and drainage notes and other details, see B3-8
Length of ⓧ, ⓨ, and ⓩ bars indicates distance from top of footing to upper end of bar measured along bar.
No other splices are allowed except shown in the plans.

STATE OF CALIFORNIA
DEPARTMENT OF TRANSPORTATION

COUNTERFORT RETAINING WALL TYPE 3

NO SCALE

ALL DIMENSIONS ARE IN MILLIMETERS UNLESS OTHERWISE SHOWN

RSP B3-5 DATED OCTOBER 26, 2000 SUPERSEDES STANDARD PLAN B3-5 DATED JULY 1, 1999-PAGE 186 OF THE STANDARD PLANS BOOK DATED JULY 1999.

REVISED STANDARD PLAN RSP B3-5

1999 REVISED STD. PLAN RSP B3-5

DIST	COUNTY	ROUTE	KILOMETER POST TOTAL PROJECT	SHEET NO.	TOTAL SHEETS

Overcomer Y. Hor
REGISTERED CIVIL ENGINEER

October 26, 2000
PLANS APPROVAL DATE

REGISTERED PROFESSIONAL ENGINEER Overcomer Y. Hor No. C45803 Exp. 12-31-02 CIVIL STATE OF CALIFORNIA

The State of California or its officers or agents shall not be responsible for the accuracy or completeness of electronic copies of this plan sheet.

To accompany plans dated _____

Caltrans Metric

Appropriate details of top of wall are shown elsewhere.

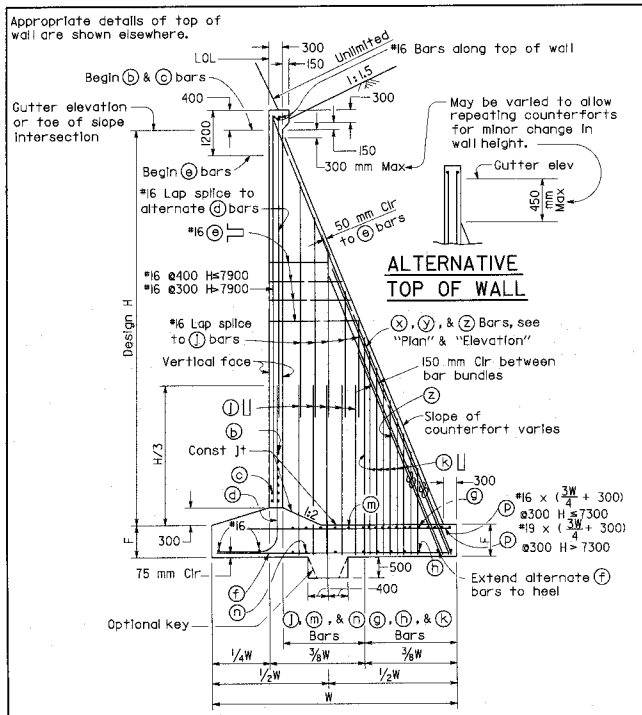

ALTERNATIVE TOP OF WALL

SPREAD FOOTING SECTION

TABLE FOR SPACING FOR ⓑ, ⓒ & ⓔ BARS

Distance below top of wall (Top of wall)	ⓑ	ⓒ	ⓔ
	400	400	
600	400	400	
1200	400	400	400
1800	400	400	400
2400	400	400	400
3000	300	400	400
3600	300	400	400
4200	300	400	400
4900	300	400	300
5500	300	400	300
6100	300	400	300
6700	300	400	300
7300	300	400	200
7900	300	400	200
8500	300	400	200
9100			

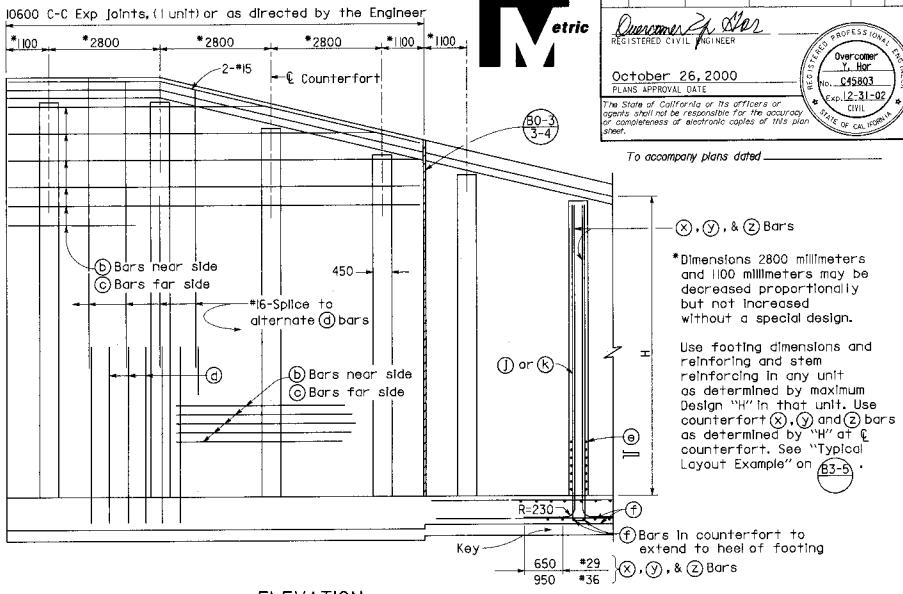

*Dimensions 2800 millimeters and 1100 millimeters may be decreased proportionally but not increased without a special design.

Use footing dimensions and reinforing and stem reinforcing in any unit as determined by maximum Design "H" in that unit. Use counterfort ⓧ, ⓨ and ⓩ bars as determined by "H" at ℄ counterfort. See "Typical Layout Example" on B3-5.

ELEVATION

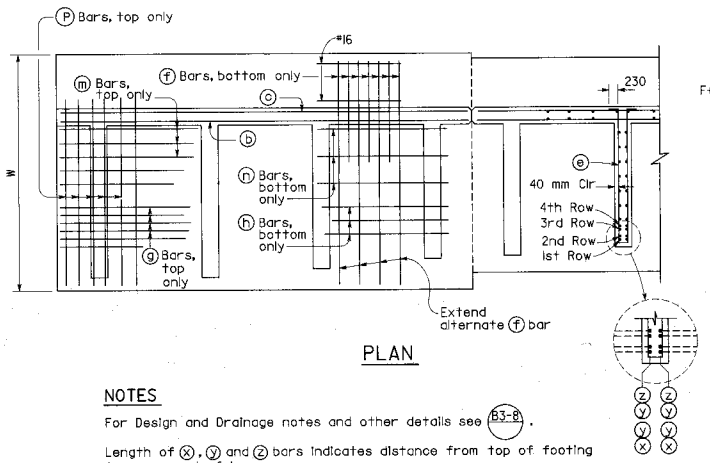

PLAN

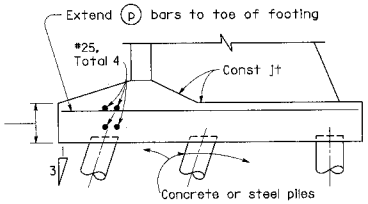

400 kN PILE FOOTING SECTION

Reinforcement detailed is to be placed in addition to that shown for spread footing. "Provide 150 mm clear to ⓕ bars". All piles not shown, see Pile Layout on other

TABLE OF REINFORCING STEEL, DIMENSIONS AND DATA

Design H	5500	6100	6700	7300	7900	8500	9100
W	3950	4300	4750	5150	5600	5950	6400
F	550	650	650	650	700	700	800
ⓧ Bars, edge counterfort	2-#29	2-#29	2-#29	2-#36	2-#36	2-#36	2-#36
ⓧ Bars, length	6300	6900	7550	8200	8850	9550	10200
ⓨ Bars, edge counterfort	4-#29	4-#29	4-#29	4-#36	4-#36	4-#36	4-#36
ⓨ Bars, length	4000	4800	5400	6400	6700	6900	7900
ⓩ Bars, edge counterfort			2-#29	2-#36	2-#36	2-#36	2-#36
ⓩ Bars, length			3200	3700	4100	4200	5000
ⓑ Bars, back face wall	#16		See Table for spacing				
ⓒ Bars, front face wall	#16		See Table for spacing				
ⓓ Bars, wall face	#16 ø200	#16 ø175	#16 ø175	#19 ø175	#19 ø150	#25 ø200	#25 ø200
ⓔ Stirrups counterfort	#16		See Table for spacing				
ⓕ Bars, toe	#16 ø200	#16 ø175	#16 ø175	#16 ø175	#16 ø150	#19 ø200	#19 ø200
ⓕ Bars, length	1900	2200	2400	2600	2800	3000	3200
ⓙ Bars, counterfort heel	#16 ø300	#16 ø300	#16 ø300	#19 ø300	#19 ø300	#19 ø300	#19 ø300
ⓚ Bars, counterfort heel	#16 ø150	#16 ø150	#16 ø150	#19 ø150	#19 ø150	#19 ø150	#19 ø150
ⓜ Bars, top of heel	#19 ø400	←					→
ⓖ Bars, top of heel	#19 ø200	←					→
ⓝ Bars, bottom of heel	#16 ø400	←					→
ⓗ Bars, bottom of heel	#16 ø200	←					→
Toe Pressure, kPa	310	355	385	415	455	485	520

NOTES

For Design and Drainage notes and other details see B3-8.

Length of ⓧ, ⓨ and ⓩ bars indicates distance from top of footing to upper end of bar.

No other splices are allowed except shown in the plans.

STATE OF CALIFORNIA
DEPARTMENT OF TRANSPORTATION

COUNTERFORT RETAINING WALL TYPE 4

NO SCALE

ALL DIMENSIONS ARE IN MILLIMETERS UNLESS OTHERWISE SHOWN

RSP B3-6 DATED OCTOBER 26, 2000 SUPERSEDES STANDARD PLAN B3-6 DATED JULY 1, 1999-PAGE 187 OF THE STANDARD PLANS BOOK DATED JULY 1999.

REVISED STANDARD PLAN RSP B3-6

1999 REVISED STD. PLAN RSP B3-6

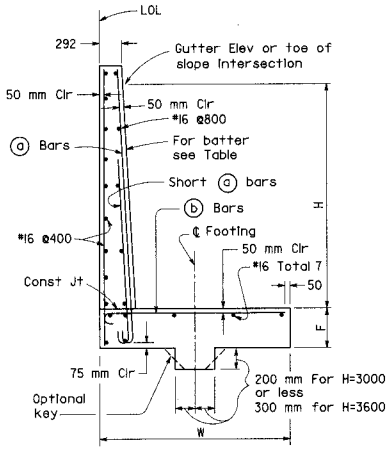

SPREAD FOOTING SECTION

NOTE

At ⓐ and Short ⓐ bars:

H ≤ 1800 mm, no splices are allowed within 500 mm above the top of footing.

H > 1800 mm, no splices are allowed within H/4 above the top of footing.

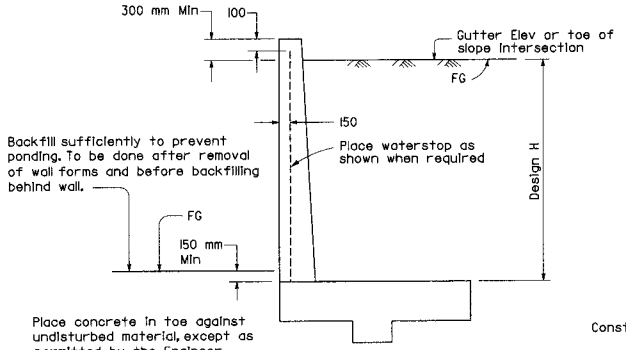

DESIGN

For drainage notes and other details, see (B3-8)

MAX PILE SPACING FOR 400 kN PILES

Design H	Front Row 1:3 Batter	Back Row Vertical
1200	5400	5400
1800	3600	5400
2400	2700	5400
3000	1800	3600
3600	1200	2400

For actual spacing, see Wall Layout.

Pile layout does not apply to Case IV conditions.

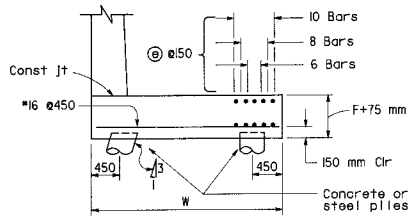

Reinforcement detailed is to be placed in addition to that shown for spread footings.

◉ For Design H=1200 use W=1550
All others from table

400 kN PILE FOOTING SECTION

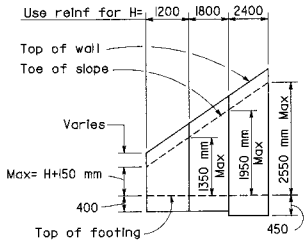

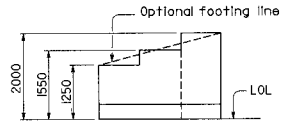

TYPICAL LAYOUT EXAMPLE

For joints required, see (B0-3 3-3) & (B0-3 3-4)

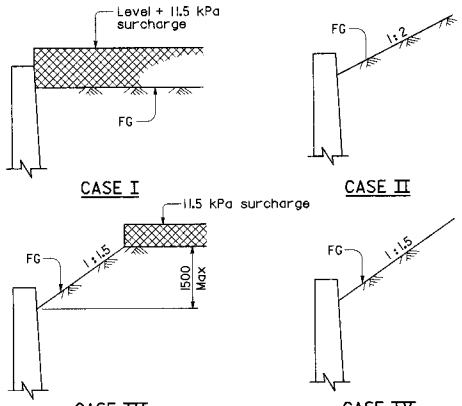

DETAIL OF DESIGN LOADING CASES

Case I Level +11.5 kPa surcharge
Case II 1:2 Unlimited slope
Case III 1:1.5 Limited slope (1500 max height) +11.5 kPa surcharge
Case IV 1:1.5 Unlimited slope

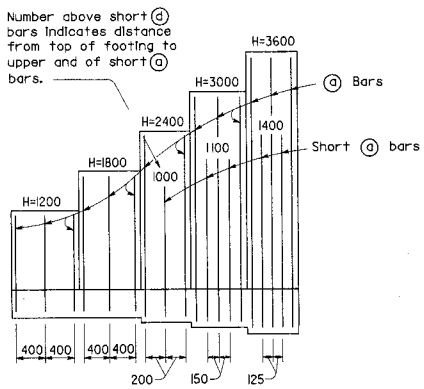

ELEVATION

NOTES

Design Conditions:

Design H may be exceeded by 150 mm before going to the next size.
Special footing design is required where foundation material is incapable of supporting toe pressure loads listed in table.

Design Data:

f_c = 10 MPa f'_c = 25 MPa f_s = 168 MPa n = 10 earth = 19 kN/m³
Case I- Wall design for equivalent fluid pressure = 4.2 and 5.6 kPa/m.
Case II, III, IV - Wall design is based on Rankine's formula with ø = 33° 42'.

TABLE OF REINFORCING STEEL, DIMENSIONS AND DATA

Design H		◉ 1200	1800	2400	3000	3600
W		1250	1550	2000	2450	2900
F Spread Ftg		400	400	450	450	550
Batter		None	None	None	100:3	100:6
	ⓐ Bars	#16@400	#16@400	#16@400	#16@300	#16@250
Short	ⓐ Bars	None	None	#16@400	#16@300	#16@250
	ⓑ Bars	#16@400	#16@400	#16@200	#16@150	#16@125
Total	ⓔ Bars	8-#19	8-#19	10-#19	8-#19	6-#19
Toe Pressure	Case I kPa	80	105	120	145	170
	Case II kPa	75	100	130	165	195
	Case III kPa	80	110	140	185	210
	Case IV kPa	95	155	200	255	310

STATE OF CALIFORNIA
DEPARTMENT OF TRANSPORTATION

RETAINING WALL TYPE 5

NO SCALE

ALL DIMENSIONS ARE IN MILLIMETERS UNLESS OTHERWISE SHOWN

RSP B3-7 DATED OCTOBER 26, 2000 SUPERSEDES STANDARD PLAN B3-7 DATED JULY 1, 1999-PAGE 188 OF THE STANDARD PLANS BOOK DATED JULY 1999.

REVISED STANDARD PLAN RSP B3-7

Caltrans Metric

DIST	COUNTY	ROUTE	KILOMETER POST TOTAL PROJECT	SHEET NO.	TOTAL SHEETS

REGISTERED CIVIL ENGINEER

October 26, 2000
PLANS APPROVAL DATE

REGISTERED PROFESSIONAL ENGINEER Overcomer Y. Hor No. C45803 Exp. 12-31-02 CIVIL STATE OF CALIFORNIA

The State of California or its officers or agents shall not be responsible for the accuracy or completeness of electronic copies of this plan sheet.

To accompany plans dated _____

1999 REVISED STD. PLAN RSP B3-7

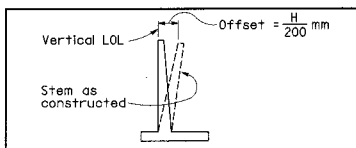

APPROXIMATE WALL OFFSET VALUES

Not required for wall Types 3 and 4. Values for offseting forms to be determined by the Engineer.

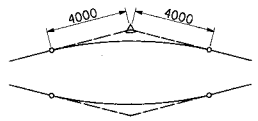

8000 mm VC AT TOP OF WALL SLOPE CHANGE

Where shown on the plans

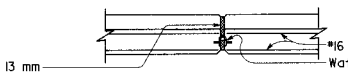

PLAN OF WALL WITH BRIDGE DETAIL 3-4

(see B0-3 / 3-4)

PLAN OF WALL WITH EXPANSION JOINT ONLY

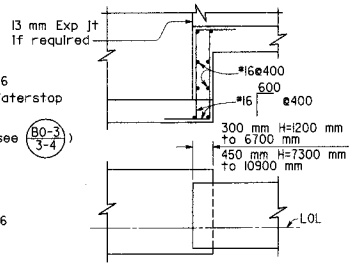

FOOTING ONLY

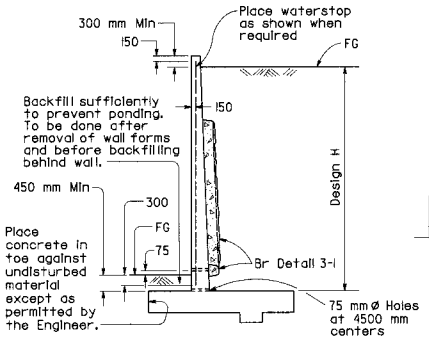

DESIGN AND DRAINAGE

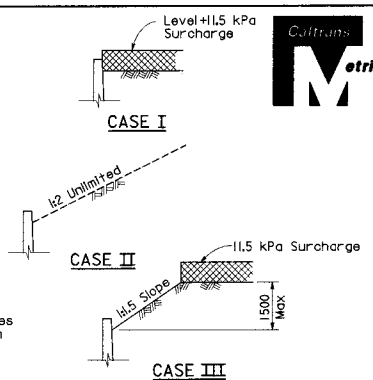

DETAIL OF DESIGN LOADING CASES

Case I Level +11.5 kPa surcharge

Case II 1:2 Unlimited slope

Case III 1:1.5 Limited slope (1500 max height) +11.5 kPa surcharge

NOTE: Surcharge Limits Shown Apply To Retaining Walls Type 1 and 3.

To accompany plans dated _____

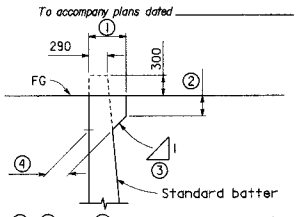

Dimensions 1, 2 and 3 to be as shown elsewhere in the Project Plans.

4 Stem width at base of haunch to be determined as shown.

STEM WIDTH AT BASE OF HAUNCH

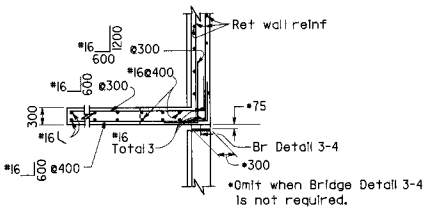

*Omit when Bridge Detail 3-4 is not required.

PLAN

(For return wall Type "A")

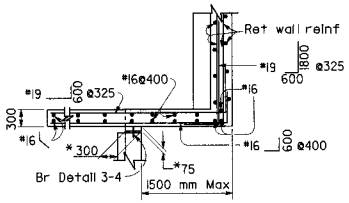

PLAN

(For return wall Type "B")

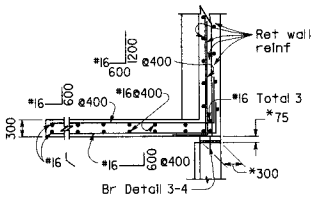

*Omit when Bridge Detail 3-4 is not required.

PLAN

(For return wall Type "C")

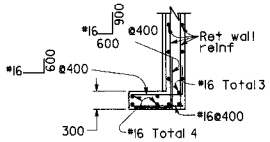

PLAN

(For return wall Type "D")

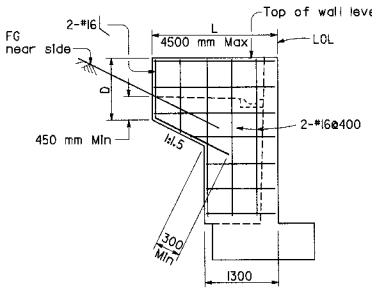

ELEVATION

RETURN WALL TYPE "A"

Use where H=2400 mm or less

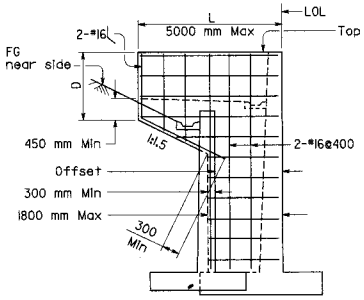

ELEVATION

RETURN WALL TYPE "B"

Use where H=3000 mm or more on offset walls

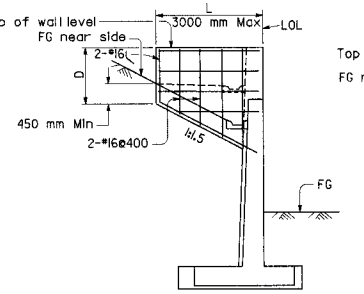

ELEVATION

RETURN WALL TYPE "C"

Use where H=3000 or more on straight walls

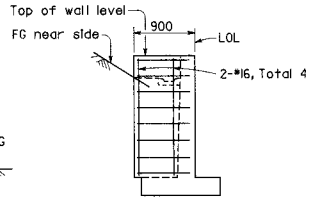

ELEVATION

RETURN WALL TYPE "D"

Use where H=1800 or less

NOTES

Design Conditions:

Design H may be exceeded by 150 millimeters before going to the next size. Special footing design is required where foundation material is incapable of supporting toe pressure listed in table.

Return wall not required unless shown elsewhere.

Design Data:

f_c = 10 MPa f_c' = 25 MPa f_s = 168 MPa

n = 10 earth = 19 kN/m³

11.5 kPa surcharge:

Equivalent fluid pressure =

5.6 kPa/m maximum for determination of toe pressure.

4.2 kPa/m minimum for determination of heel pressure.

Earth pressures for 1:2 unlimited slope, 1:1.5 slope, and 1:1.5 unlimited slope, determined from Rankine's formula with Ø=33°-42'.

STATE OF CALIFORNIA
DEPARTMENT OF TRANSPORTATION

RETAINING WALL DETAILS NO. 1

NO SCALE

ALL DIMENSIONS ARE IN MILLIMETERS UNLESS OTHERWISE SHOWN

RSP B3-8 DATED AUGUST OCTOBER 26, 2000 SUPERSEDES STANDARD PLAN B3-8 DATED JULY 1, 1999-PAGE 189 OF THE STANDARD PLANS BOOK DATED JULY 1999.

REVISED STANDARD PLAN RSP B3-8

DIST	COUNTY	ROUTE	KILOMETER POST TOTAL PROJECT	SHEET NO.	TOTAL SHEETS

California Metric

REGISTERED CIVIL ENGINEER

October 26, 2000
PLANS APPROVAL DATE

REGISTERED PROFESSIONAL ENGINEER Overcomer Y. Hor No. C45803 Exp. 12-31-02 CIVIL STATE OF CALIFORNIA

The State of California or its officers or agents shall not be responsible for the accuracy or completeness of electronic copies of this plan sheet.

DIST	COUNTY	ROUTE	KILOMETER POST TOTAL PROJECT	SHEET NO.	TOTAL SHEETS

REGISTERED CIVIL ENGINEER

October 26, 2000
PLANS APPROVAL DATE

REGISTERED PROFESSIONAL ENGINEER Overcomer Y. Hor No. C45803 Exp. 12-31-02 CIVIL STATE OF CALIFORNIA

The State of California or its officers or agents shall not be responsible for the accuracy or completeness of electronic copies of this plan sheet.

To accompany plans dated _____

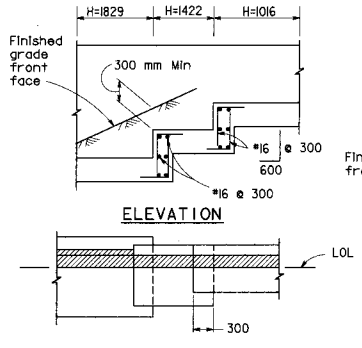

FOOTING STEP DETAILS

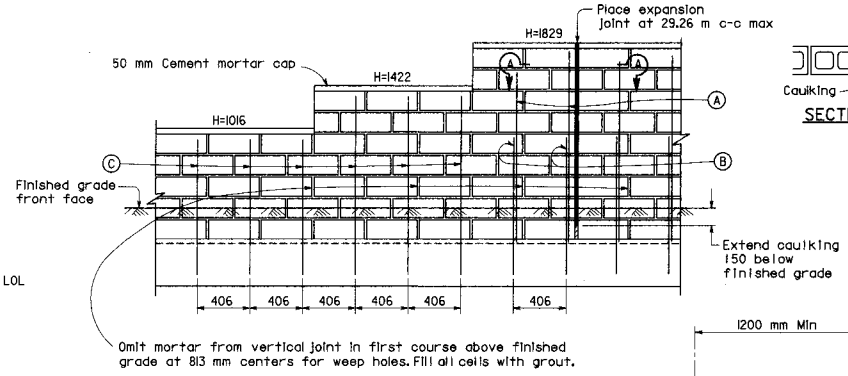

ELEVATION - MASONRY CONSTRUCTION

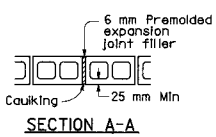

SECTION A-A

DESIGN DATA

Masonry: f_m = 3.5 MPa f'_m = 10.5 MPa f_s = 168 MPa n = 20

Reinforced Concrete: f_c = 10 MPa f'_c = 25 MPa f_s = 168 MPa n = 10

Earth = 19 kN/m^3

Minimum allowable soil bearing capacity of foundation material = 95 kPa

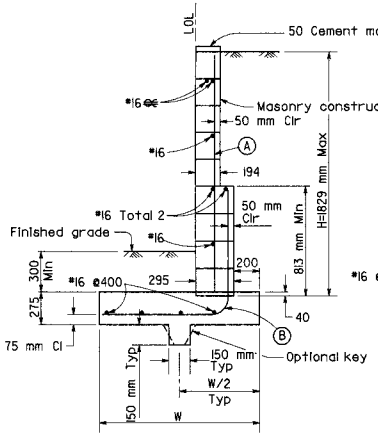

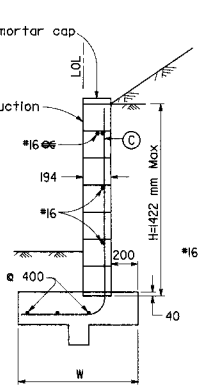

TYPE 6A WALL

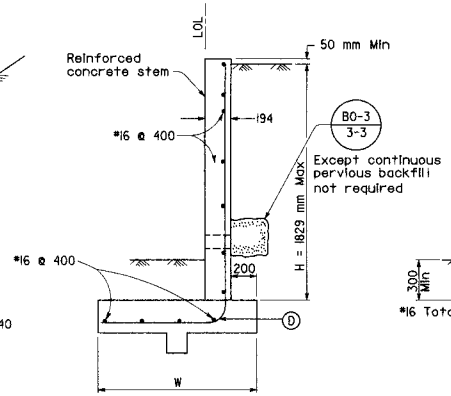

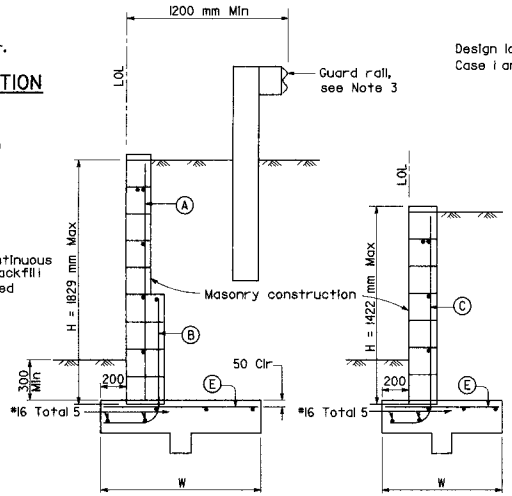

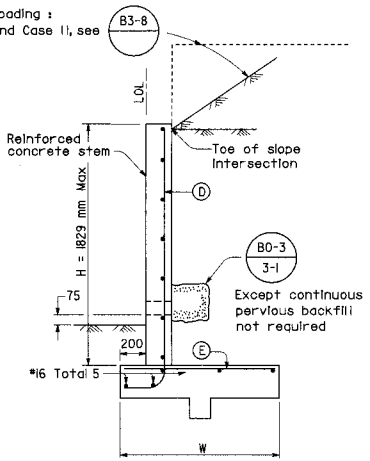

TYPE 6B WALL

Type	Design H	1016	1219	1422	1626	1829
6A	W	1000	1100	1200	1300	1400
6A	A				#16@406	#16@406
6A	B				#16@406	#16@406
6A	C	#16@406	#16@406	#16@406		
6A	D	#16@375	#16@375	#16@375	#16@375	#16@300

NOTES

1. For details not shown at "6B", see "6A".
2. Type 6 retaining wall shall be limited to use for walls of Design H of 1829 mm or less.
3. Where traffic is adjacent to the top of wall, guard rails should be set back from the top front face of wall at least 1200 mm.
4. Unless otherwise stipulated, the contractor will have the option of constructing the Type 6 walls of either masonry or reinforced concrete.
5. For reinforced concrete wall stem joint details, See B0-3 / 3-3 and B0-3 / 3-4.
6. No splices are allowed on A, B and C bars.
7. At D bar, no splices are allowed within 500 mm above the top of footing.

Type	Design H	1016	1219	1422	1626	1829
6B	W	850	950	1050	1150	1250
6B	A				#16@406	#16@406
6B	B				#16@406	#16@406
6B	C	#16@406	#16@406	#16@406		
6B	D	#16@375	#16@375	#16@375	#16@375	#16@300
6B	E	#16@375	#16@375	#16@375	#16@375	#16@300

STATE OF CALIFORNIA
DEPARTMENT OF TRANSPORTATION

RETAINING WALL TYPE 6 1829 mm MAXIMUM

NO SCALE

ALL DIMENSIONS ARE IN MILLIMETERS UNLESS OTHERWISE SHOWN

RSP B3-11 DATED OCTOBER 26, 2000 SUPERSEDES STANDARD PLAN B3-11 DATED JULY 1, 1999-PAGE 191 OF THE STANDARD PLANS BOOK DATED JULY 1999.

REVISED STANDARD PLAN RSP B3-11

1999 REVISED STD. PLAN RSP B3-11

To accompany plans dated _____

Caltrans Metric

DIST	COUNTY	ROUTE	KILOMETER POST TOTAL PROJECT	SHEET NO.	TOTAL SHEETS

REGISTERED CIVIL ENGINEER

October 26, 2000
PLANS APPROVAL DATE

The State of California or its officers or agents shall not be responsible for the accuracy or completeness of electronic copies of this plan sheet.

REGISTERED PROFESSIONAL ENGINEER No. C48719 Exp. 9-30-04 CIVIL STATE OF CALIFORNIA

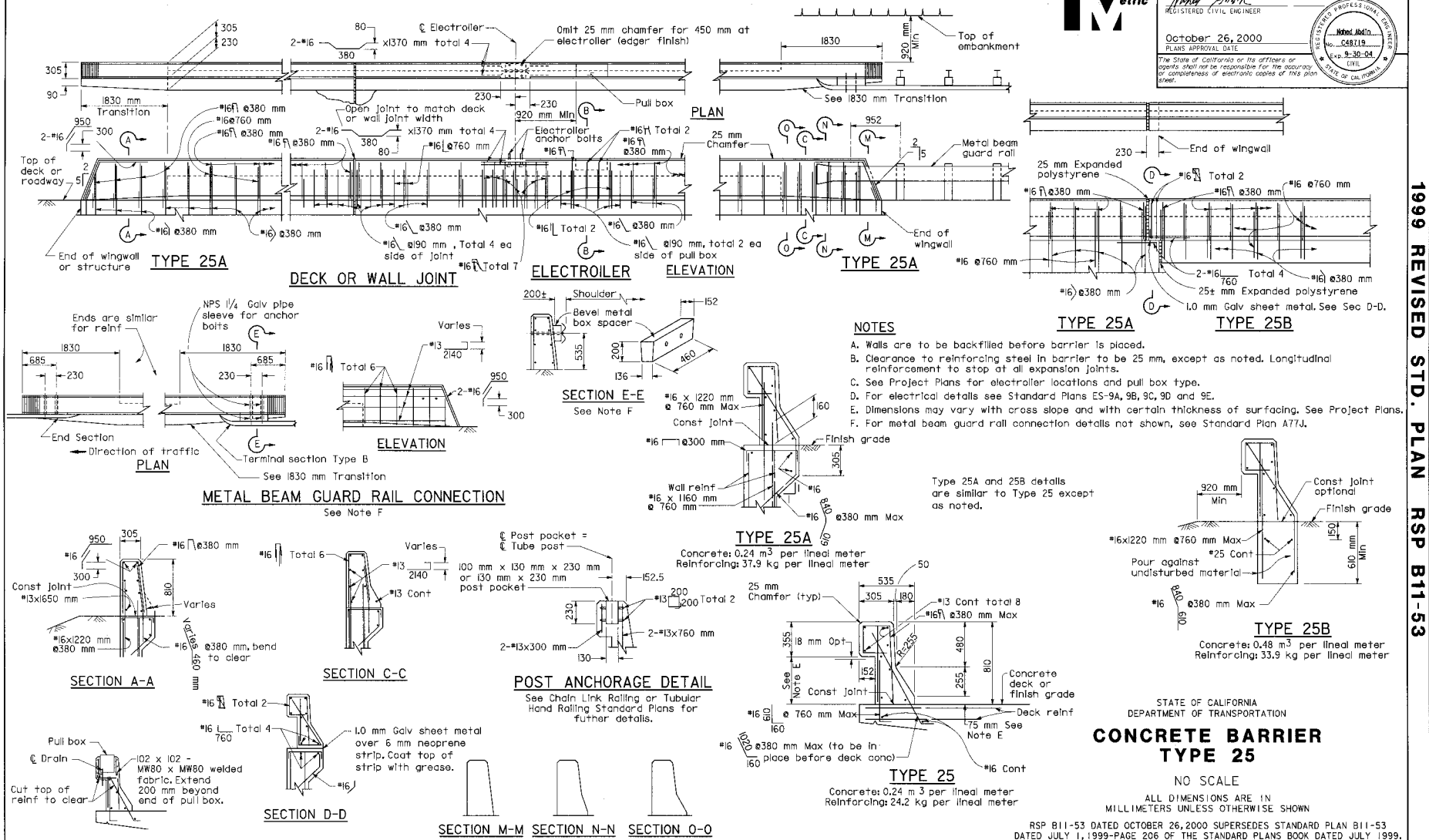

NOTES

A. Walls are to be backfilled before barrier is placed.
B. Clearance to reinforcing steel in barrier to be 25 mm, except as noted. Longitudinal reinforcement to stop at all expansion joints.
C. See Project Plans for electroiler locations and pull box type.
D. For electrical details see Standard Plans ES-9A, 9B, 9C, 9D and 9E.
E. Dimensions may vary with cross slope and with certain thickness of surfacing. See Project Plans.
F. For metal beam guard rail connection details not shown, see Standard Plan A77J.

Type 25A and 25B details are similar to Type 25 except as noted.

STATE OF CALIFORNIA
DEPARTMENT OF TRANSPORTATION

CONCRETE BARRIER TYPE 25

NO SCALE

ALL DIMENSIONS ARE IN MILLIMETERS UNLESS OTHERWISE SHOWN

RSP B11-53 DATED OCTOBER 26, 2000 SUPERSEDES STANDARD PLAN B11-53 DATED JULY 1, 1999-PAGE 206 OF THE STANDARD PLANS BOOK DATED JULY 1999.

REVISED STANDARD PLAN RSP B11-53

DIST	COUNTY	ROUTE	KILOMETER POST TOTAL PROJECT	SHEET NO.	TOTAL SHEETS

Caltrans Metric

REGISTERED CIVIL ENGINEER

October 26, 2000
PLANS APPROVAL DATE

REGISTERED PROFESSIONAL ENGINEER Nahed Abdin No. C48719 Exp. 9-30-04 CIVIL STATE OF CALIFORNIA

The State of California or its officers or agents shall not be responsible for the accuracy or completeness of electronic copies of this plan sheet.

To accompany plans dated _____

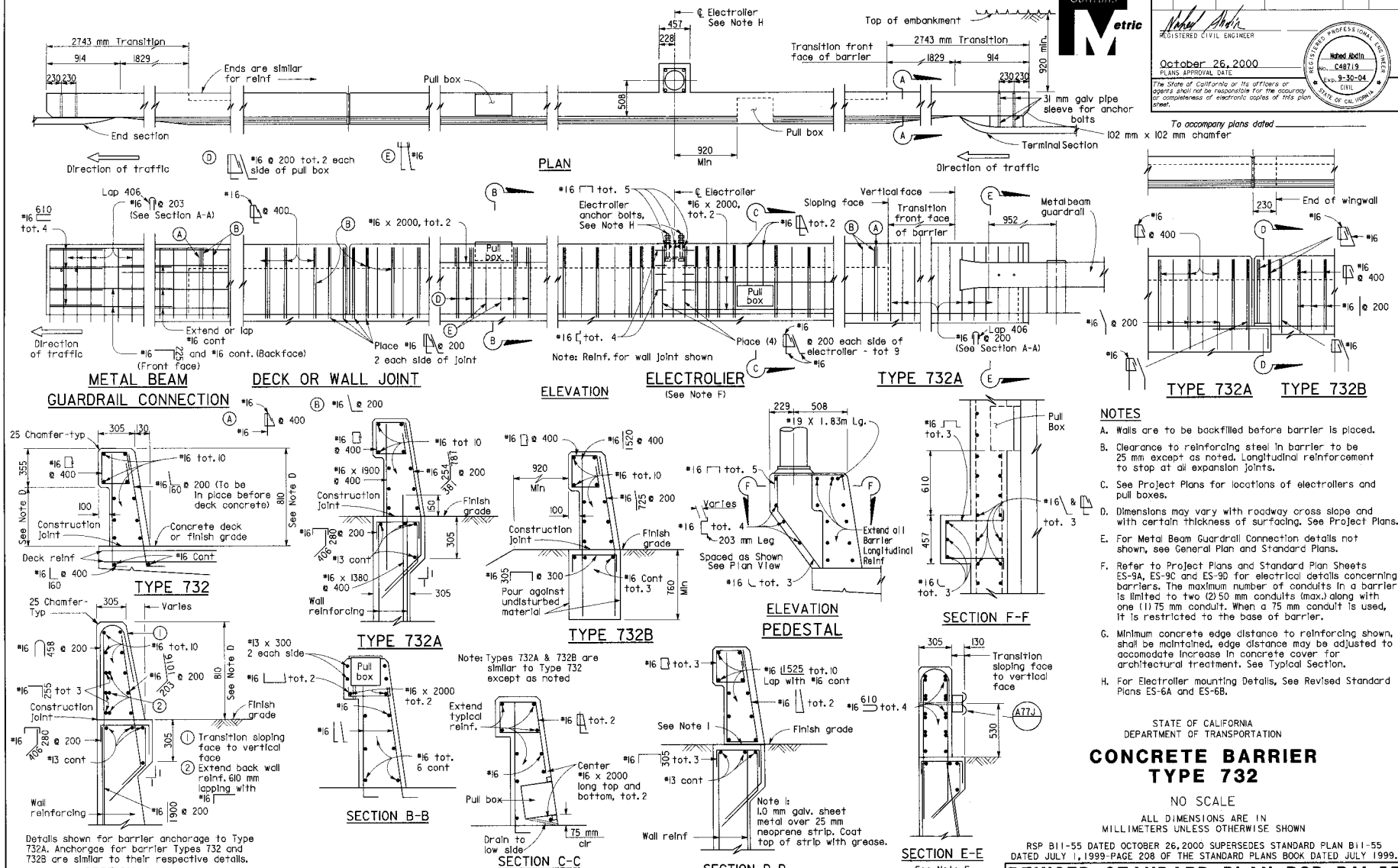

NOTES

A. Walls are to be backfilled before barrier is placed.

B. Clearance to reinforcing steel in barrier to be 25 mm except as noted. Longitudinal reinforcement to stop at all expansion joints.

C. See Project Plans for locations of electrollers and pull boxes.

D. Dimensions may vary with roadway cross slope and with certain thickness of surfacing. See Project Plans.

E. For Metal Beam Guardrail Connection details not shown, see General Plan and Standard Plans.

F. Refer to Project Plans and Standard Plan Sheets ES-9A, ES-9C and ES-9D for electrical details concerning barriers. The maximum number of conduits in a barrier is limited to two (2) 50 mm conduits (max.) along with one (1) 75 mm conduit. When a 75 mm conduit is used, it is restricted to the base of barrier.

G. Minimum concrete edge distance to reinforcing shown, shall be maintained, edge distance may be adjusted to accomodate increase in concrete cover for architectural treatment. See Typical Section.

H. For Electrolier mounting Details, See Revised Standard Plans ES-6A and ES-6B.

STATE OF CALIFORNIA
DEPARTMENT OF TRANSPORTATION

CONCRETE BARRIER TYPE 732

NO SCALE

ALL DIMENSIONS ARE IN MILLIMETERS UNLESS OTHERWISE SHOWN

RSP B11-55 DATED OCTOBER 26, 2000 SUPERSEDES STANDARD PLAN B11-55 DATED JULY 1, 1999-PAGE 208 OF THE STANDARD PLANS BOOK DATED JULY 1999.

REVISED STANDARD PLAN RSP B11-55

1999 STD. PLAN RSP B11-55

DIST	COUNTY	ROUTE	KILOMETER POST TOTAL PROJECT	SHEET NO.	TOTAL SHEETS

REGISTERED CIVIL ENGINEER

October 26, 2000
PLANS APPROVAL DATE

REGISTERED PROFESSIONAL ENGINEER Nahid Abdin No. C48719 Exp. 9-30-04 CIVIL STATE OF CALIFORNIA

The State of California or its officers or agents shall not be responsible for the accuracy or completeness of electronic copies of this plan sheet.

To accompany plans dated _____

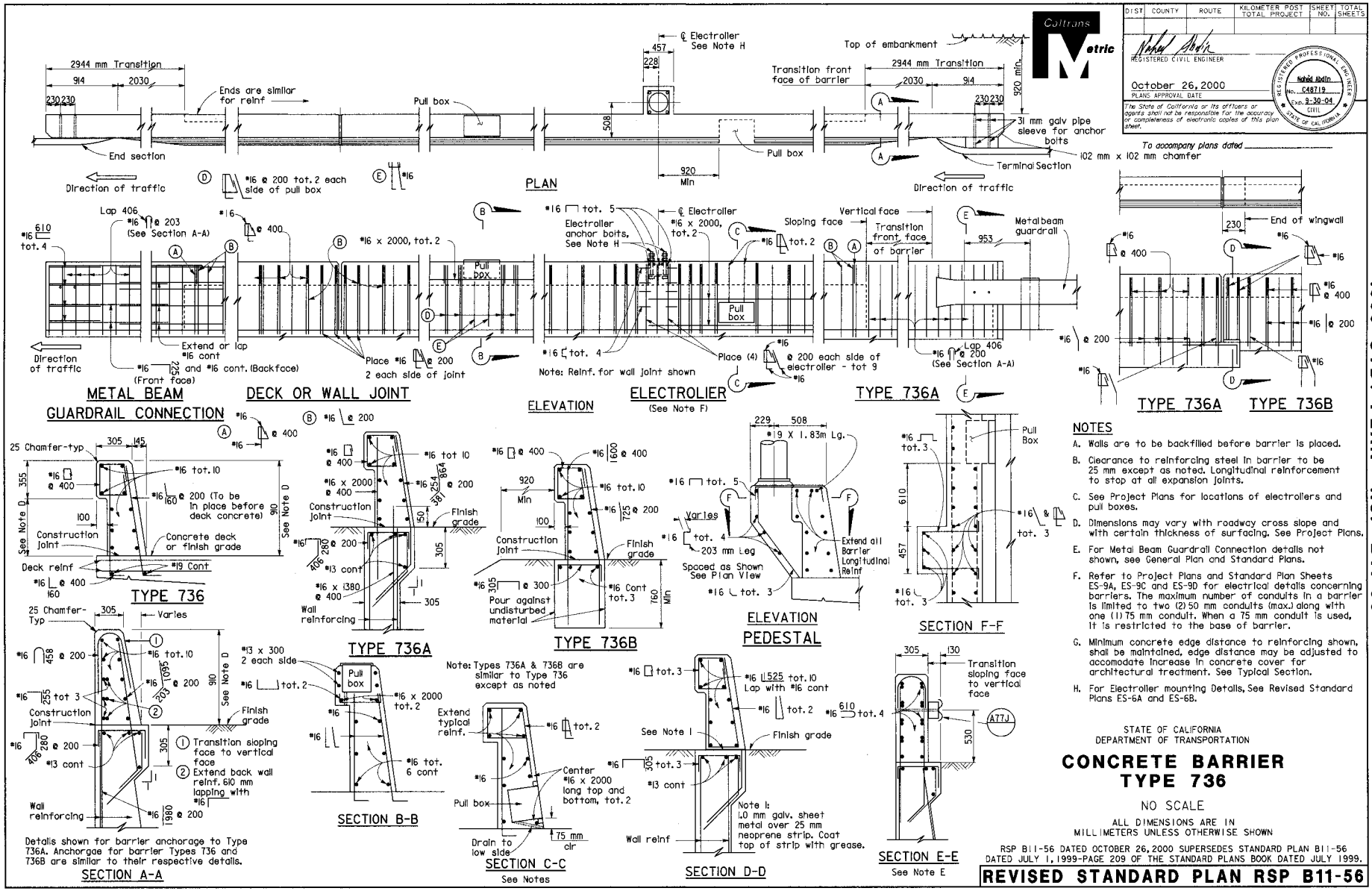

NOTES

A. Walls are to be backfilled before barrier is placed.

B. Clearance to reinforcing steel in barrier to be 25 mm except as noted. Longitudinal reinforcement to stop at all expansion joints.

C. See Project Plans for locations of electroliers and pull boxes.

D. Dimensions may vary with roadway cross slope and with certain thickness of surfacing. See Project Plans.

E. For Metal Beam Guardrail Connection details not shown, see General Plan and Standard Plans.

F. Refer to Project Plans and Standard Plan Sheets ES-9A, ES-9C and ES-9D for electrical details concerning barriers. The maximum number of conduits in a barrier is limited to two (2) 50 mm conduits (max.) along with one (1) 75 mm conduit. When a 75 mm conduit is used, it is restricted to the base of barrier.

G. Minimum concrete edge distance to reinforcing shown, shall be maintained, edge distance may be adjusted to accomodate increase in concrete cover for architectural treatment. See Typical Section.

H. For Electrolier mounting Details, See Revised Standard Plans ES-6A and ES-6B.

STATE OF CALIFORNIA
DEPARTMENT OF TRANSPORTATION

CONCRETE BARRIER TYPE 736

NO SCALE

ALL DIMENSIONS ARE IN MILLIMETERS UNLESS OTHERWISE SHOWN

RSP B11-56 DATED OCTOBER 26, 2000 SUPERSEDES STANDARD PLAN B11-56 DATED JULY 1, 1999-PAGE 209 OF THE STANDARD PLANS BOOK DATED JULY 1999.

REVISED STANDARD PLAN RSP B11-56

1999 STD. PLAN RSP B11-56

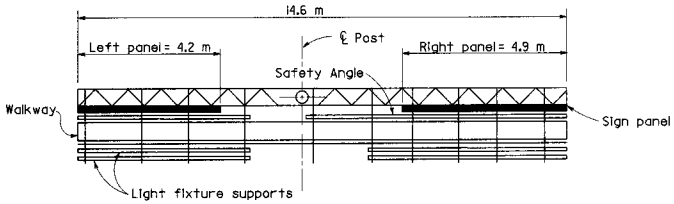

PLAN

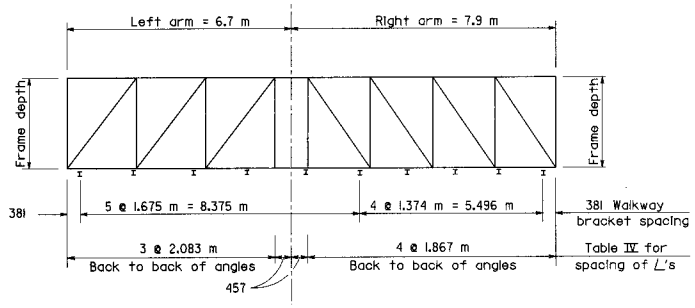

UNBALANCED SINGLE POST TYPE

Example No. 1

INSTRUCTIONS TO FABRICATOR

PROJECT PLANS SHOW:

1. Sign structure location.
2. Length of structure frame.
3. Panel size and locations on structure.
4. Walkway length for 2-post signs.
5. Post type and height to bottom of frame.
6. Base plate elevation.
7. Footing elevation or location of pile foundation.
8. Photoelectric cell location if required.

REFER TO THE FOLLOWING STANDARD PLANS FOR DETAILS NOT SHOWN ON PROJECT PLANS:

S1	Instructions and Examples
S2	Post Types II Thru VIII
S3	Post Types I-S Thru VII-S
S4	Structural Frame Members
S5	Structural Frame Members
S6	Structural Frame Details
S7	Frame Junction Details
S8A,B,C,D	Sign Panel Mounting Details
S9	Walkway Details No 1
S10	Walkway Details No 2
S11	Walkway Safety Railing Details
S13	Pile Foundation
ES-15A	Mercury Sign Lighting Equipment
ES-15C	Sign Lighting Equipment

WALKWAY BRACKETS:
Space all walkway brackets maintaining uniform spacing where possible. Maximum spacing shall not exceed 1675 mm.

LIGHTING FIXTURE SUPPORTS:
Where distance from walkway bracket to end of sign panel exceeds 406 mm, extend lighting fixture supports to next walkway bracket. See Example No 2.

WALKWAY AND SAFETY RAILING:
Walkway to be continuous for entire length of frame for single post signs. For 2 post signs see Project Plans. Safety railing to protect entire walkway, but continuous for no more than 3.35 m in one unit.

Caltrans Metric

DIST	COUNTY	ROUTE	KILOMETER POST TOTAL PROJECT	SHEET NO.	TOTAL SHEETS

REGISTERED CIVIL ENGINEER

October 26, 2000
PLANS APPROVAL DATE

REGISTERED PROFESSIONAL ENGINEER Jeffrey B. Woody No. C41260 Exp. 3-31-03 CIVIL STATE OF CALIFORNIA

The State of California or its officers or agents shall not be responsible for the accuracy or completeness of electronic copies of this plan sheet.

To accompany plans dated _____

NOTES

SPECIFICATIONS:

DESIGN: AASHTO Specifications for Structural Supports for Highway Signs, Luminaires and Traffic Signals, dated 1994.

CONSTRUCTION: Standard Specifications and the Special Provisions.

LOADING:
WIND LOADING:
Normal to face of sign: 1490 Pa
Transverse to face of sign: 20% of normal force.
WALKWAY LOADING:
Dead load+2.22 kN concentrated live load.

UNIT STRESSES:
STRUCTURAL STEEL: fs = 138 MPa
REINFORCED CONCRETE: fs = 138 MPa
fc = 8.3 MPa
FOOTING SOIL PRESSURE: 120 kPa (spread footing)

MINIMUM CLEARANCE: Vertical roadway clearance 5.5 m.

WELDING: All welding continuous unless otherwise noted on the plans. All welding to be done in accordance with the Standard Specifications.

Standard Plan Sheet No
Detail No

NOTE

Signs are shown and dimensioned looking in the direction of traffic. Double faced signs are shown and dimensioned looking ahead along stationing.

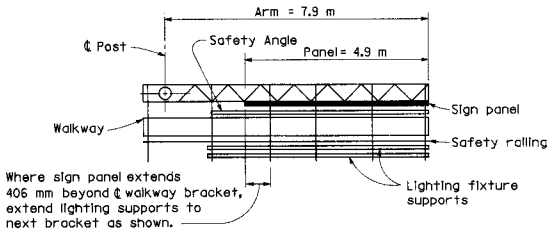

PLAN

CANTILEVER SINGLE POST TYPE

Example No. 2

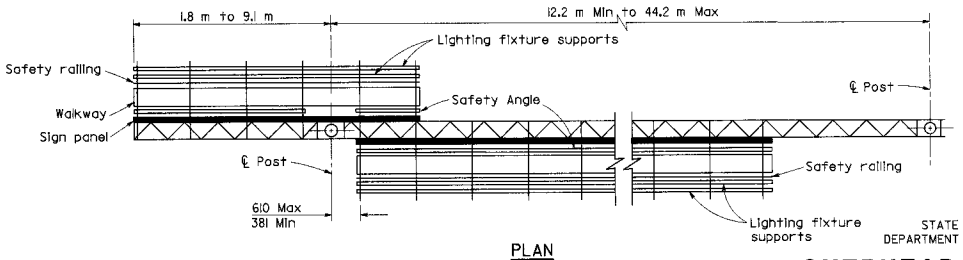

PLAN

TWO POST TYPE WITH CANTILEVER (PART DOUBLE-FACED)

Example No. 3

STATE OF CALIFORNIA
DEPARTMENT OF TRANSPORTATION

OVERHEAD SIGNS-TRUSS INSTRUCTIONS AND EXAMPLES

NO SCALE

ALL DIMENSIONS ARE IN MILLIMETERS UNLESS OTHERWISE SHOWN

RSP S1 DATED OCTOBER 26, 2000 SUPERSEDES STANDARD PLAN S1 DATED JULY 1, 1999-PAGE 218 OF THE STANDARD PLANS BOOK DATED JULY 1999.

REVISED STANDARD PLAN RSP S1

1999 STD. PLAN RSP S1

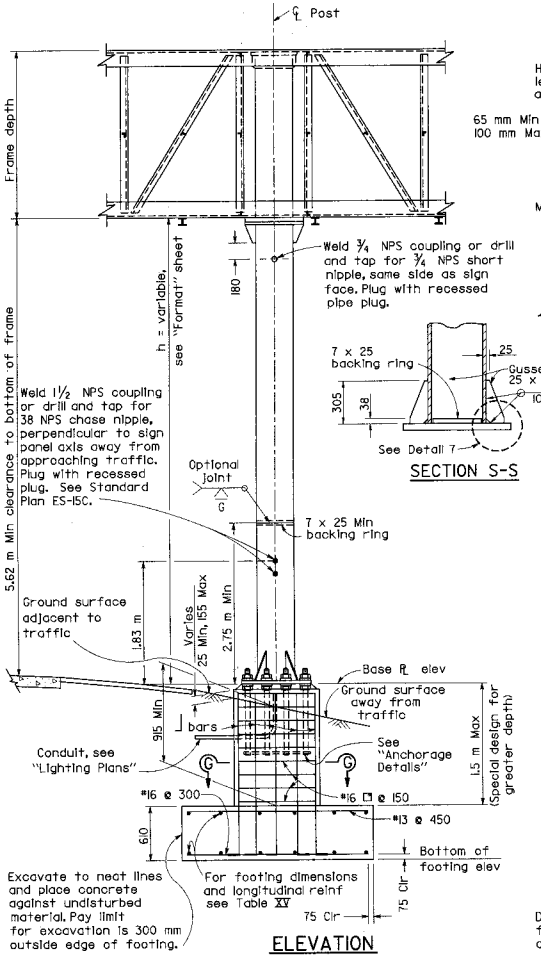

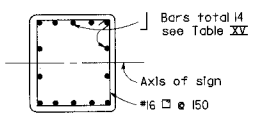

SECTION G-G

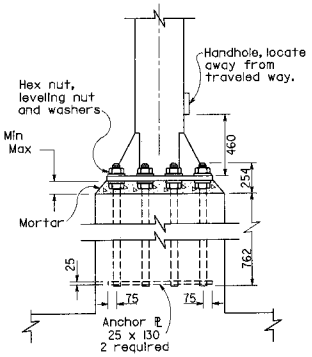

ANCHORAGE DETAILS

SECTION S-S

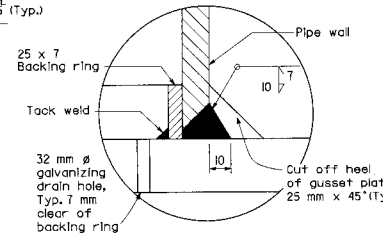

THRU POST @ BASE ℙ (NO COVER ℙ)

DETAIL 7

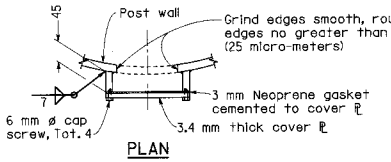

PLAN

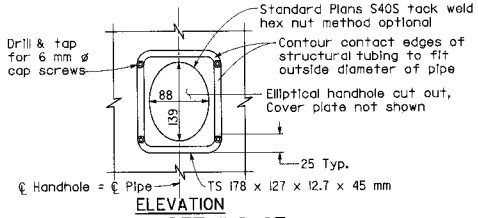

ELEVATION

TYPICAL DETAILS OF HANDHOLE AND COVER

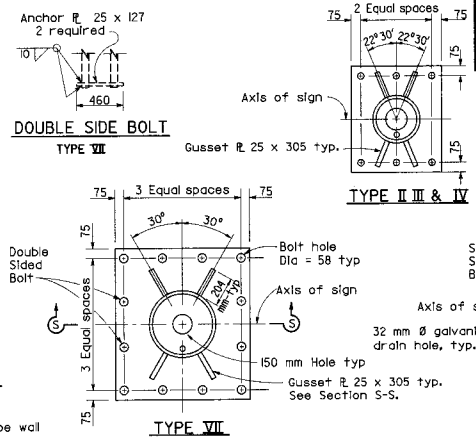

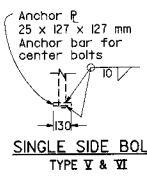

SINGLE SIDE BOLT
TYPE V & VI

TYPICAL BASE PLATES

TABLE XV

Post Type	Pipe Size NPS	Pipe Size "t" (mm)	Cap Plate Size (mm)	Base Plate Size (Note #2) (mm)	51mm ø Anchor Bolts	Pedestal Size (Note #2) (mm)	Footing Size (Note #2) (m)	Longitudinal Footing Reinforcement Top	Longitudinal Footing Reinforcement Bottom	⌋ Bars
II	12	9.53	483 x 483 x 22	712 x 635 x 51	6	890 x 815	2.2 x 3.1	6-#13 bars	9-#16 bars	#16
III	14	12.7	508 x 508 x 22	788 x 686 x 51	6	965 x 865	2.5 x 3.7	6-#16 bars	8-#22 bars	#19
IV	16	12.7	560 x 560 x 22	940 x 840 x 51	6	1120 x 1020	2.5 x 4.3	6-#16 bars	9-#25 bars	#19
V	18	12.7	610 x 610 x 22	991 x 915 x 51	10	1170 x 1095	2.8 x 4.6	6-#16 bars	9-#29 bars	#22
VI	20	12.7	660 x 660 x 25	991 x 915 x 51	10	1170 x 1095	2.8 x 4.9	6-#19 bars	8-#32 bars	#25
VII	24	12.7	762 x 762 x 25	1093 x 991 x 51	12	1295 x 1195	3.1x 5.2	7-#19 bars	10-#32 bars	#32

NOTES

1. For "General Notes" see Standard Plan S1.
2. Longer sides of base plates, pedestals and footing shall be normal to axis of sign.
3. Backfill shall be in place prior to erection of post.
4. Thread upper 203 mm of anchor bolts and galvanize upper 305 mm.
5. Spread footing shown, use Pile Foundation when shown on the Project Plans.
6. Anchor plates may be retained with hexagon nut or formed head as alternatives to details shown.
7. On single post sign structures, the post shall be raked out of plumb, with the use of the leveling nuts to make the bottom of the sign frame level.
8. At final position of post all top and bottom nuts shall be tightened against base plate.
9. When foundation is located on a steep slope with exposed face of concrete adjacent to traffic, see "Detail C" on Standard Plan S13.
10. Slope protection required when indicated on the Project Plans.

Caltrans Metric

DIST	COUNTY	ROUTE	KILOMETER POST TOTAL PROJECT	SHEET NO.	TOTAL SHEETS

REGISTERED CIVIL ENGINEER
October 26, 2000
PLANS APPROVAL DATE
REGISTERED PROFESSIONAL ENGINEER Jeffrey B. Woody No. C41260 Exp. 3-31-03 CIVIL STATE OF CALIFORNIA

The State of California or its officers or agents shall not be responsible for the accuracy or completeness of electronic copies of this plan sheet.

To accompany plans dated _____

STATE OF CALIFORNIA
DEPARTMENT OF TRANSPORTATION

OVERHEAD SIGNS-TRUSS SINGLE POST TYPE POST TYPES II THROUGH VII

NO SCALE

ALL DIMENSIONS ARE IN MILLIMETERS UNLESS OTHERWISE SHOWN

RSP S2 DATED OCTOBER 26, 2000 SUPERSEDES STANDARD PLAN S2 DATED JULY 1, 1999-PAGE 219 OF THE STANDARD PLANS BOOK DATED JULY 1999.

REVISED STANDARD PLAN RSP S2

1999 REVISED STD. PLAN RSP S2

TABLE XIV										
Post Type	Pipe Size		Split	Base Plate Size (See Note 3)	Anchor Bolts	Pedestal Size (See Note 3)	Footing Size (See Note 3)	Longitudinal Footing Reinforcement		J
	NPS	Wall Thickness (mm)	(mm)	(mm)	(mm)	(mm)	meter x meter	Top	Bottom	Bars
I-S	14	12.70	127	890 x 788 x 51	8-57 ø	1075 x 975	2.5 x 4.3	8-#16 bars	8-#29 bars	#29
II-S	16	12.70	152	890 x 788 x 51	8-57 ø	1075 x 975	2.5 x 4.3	8-#16 bars	8-#29 bars	#29
III-S	18	12.70	178	940 x 840 x 51	8-57 ø	1125 x 1025	2.5 x 4.9	8-#16 bars	8-#29 bars	#29
IV-S	20	12.70	204	1042 x 840 x 51	8-57 ø	1225 x 1025	2.8 x 5.2	9-#16 bars	9-#32 bars	#32
V-S	24	12.70	204	1143 x 991 x 51	8-57 ø	1350 x 1200	3.1 x 5.5	10-#19 bars	10-#36 bars	#36
VI-S or VII-S	24	24.60	204	1143 x 991 x 51	8-64 ø	1350 x 1200	3.7 x 6.1	13-#36 bars	13-#36 bars	#36

NOTES

1. For "General Notes" see Standard Plan S1.
2. Longer sides of base plates, pedestals and footings; shall be normal to axis of sign.
3. Backfill shall be in place prior to erection of post.
4. Thread upper 200 mm of anchor bolts and galvanize upper 300 mm.
5. Spread footing shown, use pile foundation when shown on the Project Plans.
6. Anchor plates may be retained with hex nut or formed head as an alternative to details shown.
7. When foundation is located on a steep slope with exposed face of concrete adjacent to traffic, see "Detail C" on Standard Plan S13.
8. Slope protection required when indicated on Project Plans.

Caltrans Metric

DIST	COUNTY	ROUTE	KILOMETER POST TOTAL PROJECT	SHEET NO.	TOTAL SHEETS

REGISTERED CIVIL ENGINEER

October 26, 2000
PLANS APPROVAL DATE

Jeffrey B. Woody No. C41260 Exp. 3-31-03 CIVIL STATE OF CALIFORNIA REGISTERED PROFESSIONAL ENGINEER

The State of California or its officers or agents shall not be responsible for the accuracy or completeness of electronic copies of this plan sheet.

To accompany plans dated _____

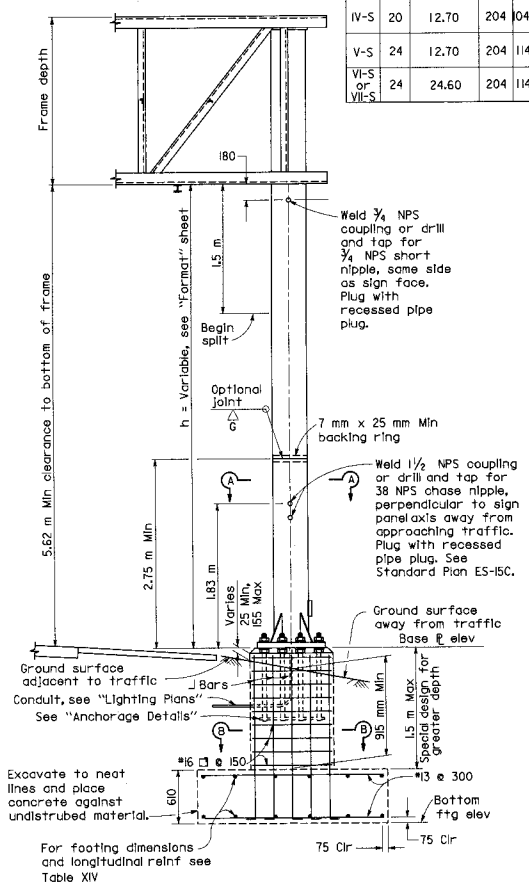

ELEVATION

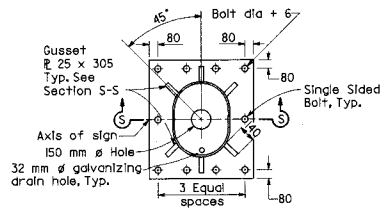

8 BOLT TYPE

TYPICAL BASE PLATE

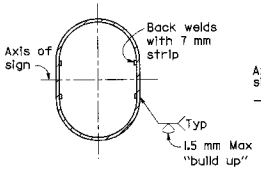

SECTION A-A

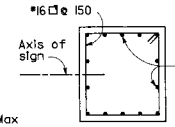

SECTION B-B

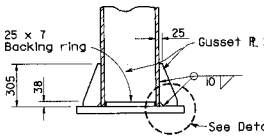

SECTION S-S

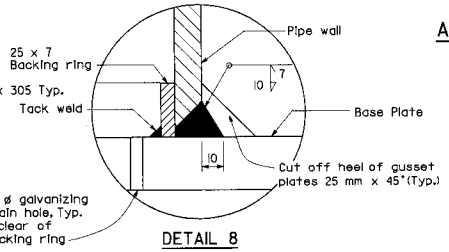

DETAIL 8

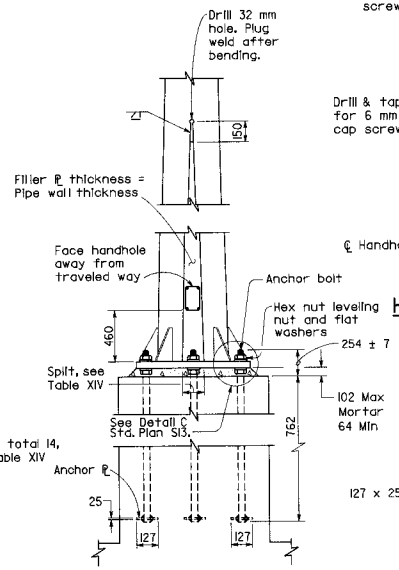

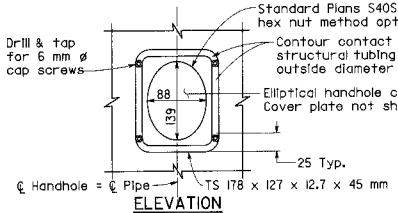

ELEVATION

TYPICAL DETAILS OF HANDHOLE AND COVER

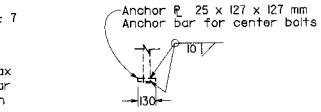

SINGLE SIDE BOLT

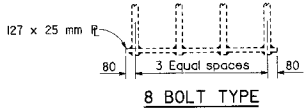

8 BOLT TYPE

ANCHORAGE DETAILS

STATE OF CALIFORNIA
DEPARTMENT OF TRANSPORTATION

OVERHEAD SIGNS-TRUSS TWO POST TYPE POST TYPES I-S THROUGH VII-S

NO SCALE

ALL DIMENSIONS ARE IN MILLIMETERS UNLESS OTHERWISE SHOWN

RSP S3 DATED OCTOBER 26, 2000 SUPERSEDES STANDARD PLAN S3
DATED JULY 1, 1999-PAGE 220 OF THE STANDARD PLANS BOOK DATED JULY 1999.

REVISED STANDARD PLAN RSP S3

1999 REVISED STD. PLAN RSP S3

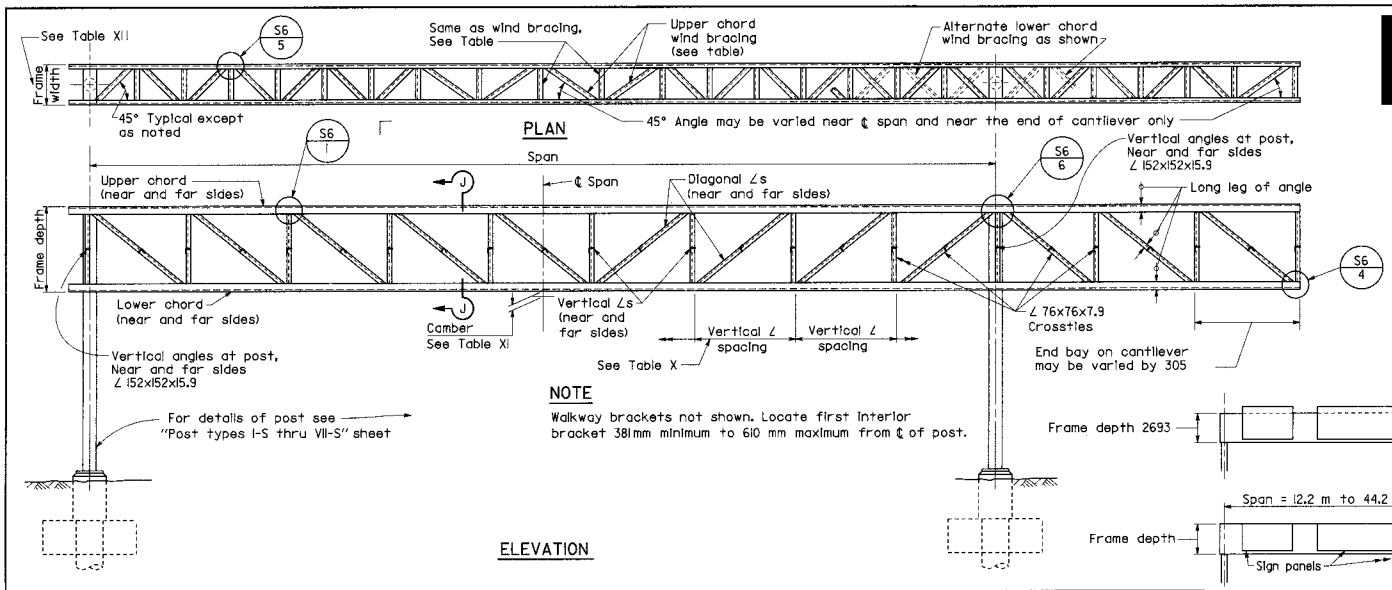

NOTE

Walkway brackets not shown. Locate first interior bracket 381mm minimum to 610 mm maximum from ℄ of post.

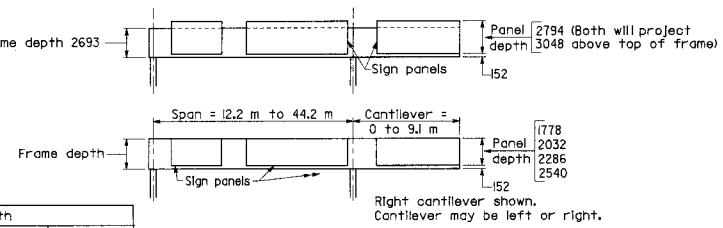

Span (m)	1778 mm Panel Depth					2032 mm Panel Depth					2286 mm Panel Depth				
	Frame Width (mm)	Chord ∠'s	Vertical ∠'s	Diagonal ∠'s	Wind Bracing ∠'s	Frame Width (mm)	Chord ∠'s	Vertical ∠'s	Diagonal ∠'s	Wind Bracing ∠'s	Frame Width (mm)	Chord ∠'s	Vertical ∠'s	Diagonal ∠'s	Wind Bracing ∠'s
12.2-15.4	915	127x89x9.5	89x89x7.9	89x89x7.9	64x64x6.4	915	127x89x9.5	89x89x7.9	89x89x7.9	64x64x6.4	915	127x89x9.5	89x89x7.9	89x89x7.9	64x64x6.4
15.5-18.5	915	127x89x9.5			64x64x6.4	915	127x89x9.5			64x64x6.4	915	127x89x9.5			64x64x6.4
18.6-21.5	915	127x89x9.5			64x64x6.4	915	127x89x9.5			64x64x6.4	915	127x89x9.5			64x64x6.4
21.6-24.6	915	152x102x12.7			64x64x6.4	915	152x102x12.7			64x64x6.4	915	152x102x12.7			64x64x6.4
24.7-27.6	915	152x102x12.7			64x64x6.4	915	152x102x12.7			64x64x6.4	915	152x102x12.7			64x64x6.4
27.7-30.7	915	152x102x12.7			64x64x6.4	915	152x102x12.7			64x64x6.4	915	152x102x12.7			64x64x6.4
30.8-33.7	915	203x102x19.0			64x64x6.4	915	203x102x19.0			64x64x6.4	915	203x102x19.0			76x76x9.5
33.8-36.8	915	203x102x19.0			64x64x6.4	915	203x102x19.0			64x64x6.4	915	203x102x19.0			76x76x9.5
36.9-39.8	915	203x102x19.0			64x64x6.4	915	203x102x19.0			64x64x6.4	1067	203x102x19.0			76x76x9.5
39.9-44.2	915	203x102x19.0			64x64x6.4	915	203x102x19.0			64x64x6.4	1067	203x102x19.0			76x76x9.5

Span (m)	2540 mm Panel Depth				
	Frame Width (mm)	Chord ∠'s	Vertical ∠'s	Diagonal ∠'s	Wind Bracing ∠'s
12.2-15.4	915	127x89x9.5	89x89x7.9	89x89x7.9	64x64x6.4
15.5-18.5	915	127x89x9.5			64x64x6.4
18.6-21.5	915	127x89x9.5			64x64x6.4
21.6-24.6	915	152x102x12.7			64x64x6.4
24.7-27.6	915	152x102x12.7			64x64x6.4
27.7-30.7	915	152x102x12.7			64x64x6.4
30.8-33.7	1067	203x102x19.0			76x76x9.5
33.8-36.8	1067	203x102x19.0			76x76x9.5
36.9-39.8	1067	203x102x19.0			76x76x9.5
39.9-44.2	1067	203x102x19.0			76x76x9.5

Span (m)	2794 mm and 3048 mm Panel Depth				
	Frame Width (mm)	Chord ∠'s	Vertical ∠'s	Diagonal ∠'s	Wind Bracing ∠'s
12.2-15.4	915	127x89x9.5	89x89x7.9	89x89x7.9	64x64x6.4
15.5-18.5	915	127x89x9.5			64x64x6.4
18.6-21.5	915	127x89x9.5			64x64x6.4
21.6-24.6	915	152x102x12.7			76x76x9.5
24.7-27.6	915	152x102x12.7			76x76x9.5
27.7-30.7	1067	152x102x12.7			76x76x9.5
30.8-33.7	1067	203x102x19.0			76x76x9.5
33.8-36.8	1067	203x102x19.0			76x76x9.5
36.9-39.8	1067	203x102x19.0			76x76x9.5
39.9-44.2	1067	229x102x19.0			76x76x9.5

TABLE XII

RANGE OF STRUCTURE SIZES

Panel Depth (mm)	Frame Depth (mm)	Max Vertical ∠ Spacing (mm)
1778	1931	1829
2032	2185	1829
2286	2439	2286
2540	2693	2286
2794	2693	2286
3048	2693	2286

TABLE X

Camber For Fabrication At ℄ Span	
Span (m)	Camber (mm)
12.19 - 15.24	27
15.25 - 30.48	54
30.49 - 44.20	83

Camber to approximate parabola. Camber of cantilever arm = +13 mm for arms greater than 3.05 m.

TABLE XI

NOTES

Frame widths shown are nominal. These widths may be varied by 6 mm to standardize fabrication methods.

Caltrans Metric

DIST	COUNTY	ROUTE	KILOMETER POST TOTAL PROJECT	SHEET NO.	TOTAL SHEETS

REGISTERED CIVIL ENGINEER

October 26, 2000
PLANS APPROVAL DATE

The State of California or its officers or agents shall not be responsible for the accuracy or completeness of electronic copies of this plan sheet.

REGISTERED PROFESSIONAL ENGINEER Jeffrey B. Woody No. C41260 Exp. 3-31-03 CIVIL STATE OF CALIFORNIA

To accompany plans dated

STATE OF CALIFORNIA
DEPARTMENT OF TRANSPORTATION

OVERHEAD SIGNS-TRUSS TWO POST TYPE STRUCTURAL FRAME MEMBERS

NO SCALE

ALL DIMENSIONS ARE IN MILLIMETERS UNLESS OTHERWISE SHOWN

RSP S5 DATED OCTOBER 26, 2000 SUPERSEDES STANDARD PLAN S5 DATED JULY 1, 1999-PAGE 222 OF THE STANDARD PLANS BOOK DATED JULY 1999.

REVISED STANDARD PLAN RSP S5

1999 REVISED STD. PLAN RSP S5

DIST	COUNTY	ROUTE	KILOMETER POST TOTAL PROJECT	SHEET NO.	TOTAL SHEETS

REGISTERED CIVIL ENGINEER

October 26, 2000
PLANS APPROVAL DATE

REGISTERED PROFESSIONAL ENGINEER Jeffrey B. Woody No. C41260 Exp. 3-31-03 CIVIL STATE OF CALIFORNIA

The State of California or its officers or agents shall not be responsible for the accuracy or completeness of electronic copies of this plan sheet.

To accompany plans dated _____

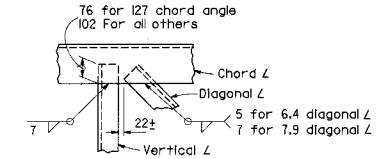

DETAIL ①

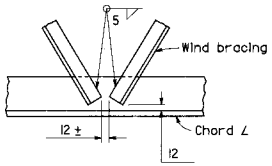

DETAIL ②

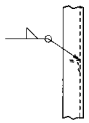

DETAIL ③

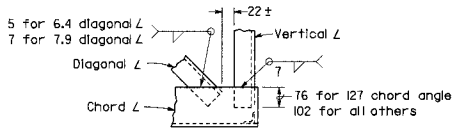

DETAIL ④

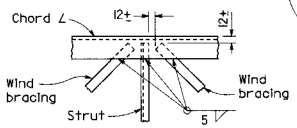

DETAIL ⑤

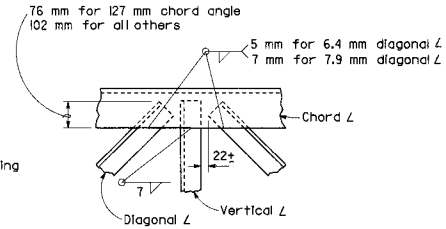

DETAIL ⑥

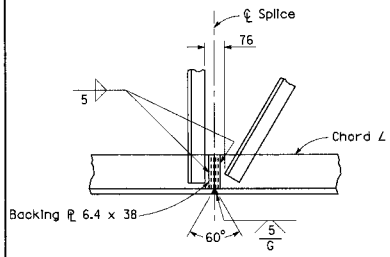

WELDED CHORD SPLICE

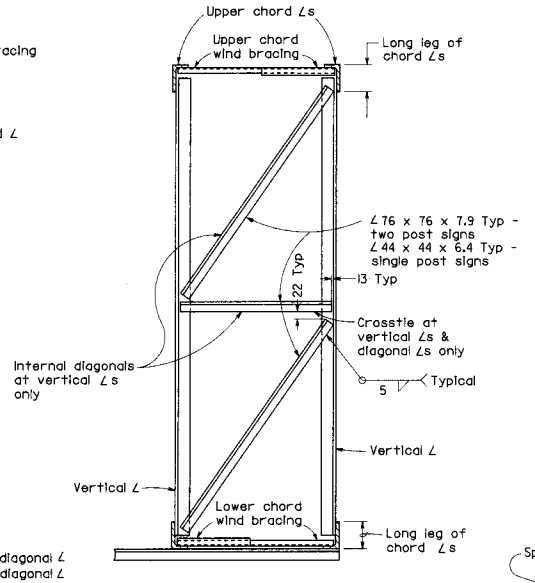

TYPICAL SECTION J-J

NOTE

Diagonal ∠s in plane of truss not shown. Bracing shown is at all vertical ∠s of truss.

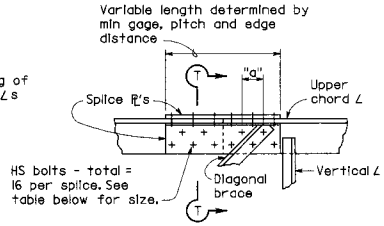

SPLICE WITH DIAGONAL ANGLE

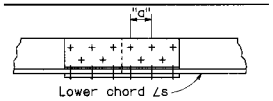

SPLICE WITHOUT DIAGONAL ANGLE

BOLTED CHORD SPLICE

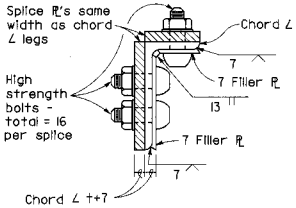

SECTION T-T

BOLTED CHORD SPLICE		
TWO POST SIGNS		
Chord ∠	Nominal Bolt Diameter	"a" mm min.
127 x 89 x 9.5	¾" (M20 x 2.5)	64
152 x 102 x 12.7	⅞" (M22 x 2.5)	76
178 x 102 x 19.0	1" (M27 x 3)	89
203 x 102 x 19.0	1⅛" (M27 x 3)	89
203 x 102 x 19.0	1¼" (M30 x 3.5)	96
203 x 102 x 19.0	1¼" (M30 x 3.5)	96
SINGLE POST SIGNS		
Chord ∠	Nominal Bolt Diameter	"a" mm min.
127 x 76 x 7.9	¾" (M20 x 2.5)	64
127 x 76 x 12.7	¾" (M20 x 2.5)	64

SPLICE NOTES

Location of Splices:

The splice shall be located so as not to interfere with mounting the walkway brackets or the clip angles for the removeable sign panel frame. The wind bracing in the area of the bolted chord splice shall be bolted to the chord angles with a 10 Ø HS bolt, nut, 2 cut washers and lock washer.

Filler ℞:

The plates welded to the angle legs on the inside shall be welded before punching the bolt holes. They shall be the same length as the cover plates. The plates are not necessary on the single post signs if the splice is located over 1/3 of the cantilever length from the post. Alternative splice details may be used if approved by the Engineer.

STATE OF CALIFORNIA
DEPARTMENT OF TRANSPORTATION

OVERHEAD SIGNS-TRUSS STRUCTURAL FRAME DETAILS

NO SCALE

ALL DIMENSIONS ARE IN MILLIMETERS UNLESS OTHERWISE SHOWN

RSP S6 DATED OCTOBER 26, 2000 SUPERSEDES STANDARD PLAN S6
DATED JULY 1, 1999-PAGE 223 OF THE STANDARD PLANS BOOK DATED JULY 1999.

REVISED STANDARD PLAN RSP S6

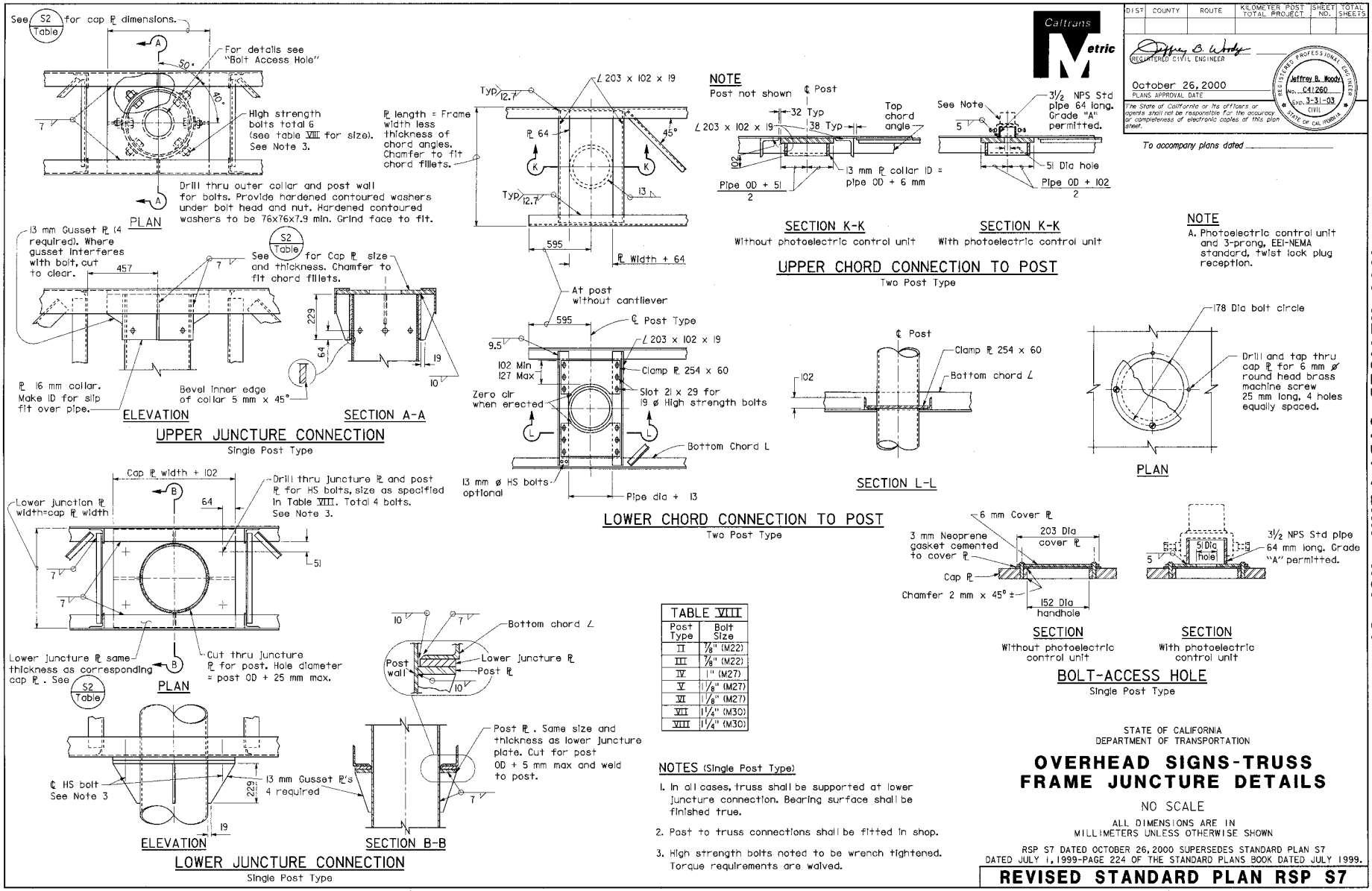

TABLE VIII	
Post Type	Bolt Size
II	7/8" (M22)
III	7/8" (M22)
IV	1" (M27)
V	1 1/8" (M27)
VI	1 1/8" (M27)
VII	1 1/4" (M30)
VIII	1 1/4" (M30)

NOTES (Single Post Type)

1. In all cases, truss shall be supported at lower juncture connection. Bearing surface shall be finished true.
2. Post to truss connections shall be fitted in shop.
3. High strength bolts noted to be wrench tightened. Torque requirements are waived.

Caltrans Metric

DIST	COUNTY	ROUTE	KILOMETER POST TOTAL PROJECT	SHEET NO.	TOTAL SHEETS

REGISTERED CIVIL ENGINEER

October 26, 2000
PLANS APPROVAL DATE

REGISTERED PROFESSIONAL ENGINEER Jeffrey B. Woody No. C41260 Exp. 3-31-03 CIVIL STATE OF CALIFORNIA

The State of California or its officers or agents shall not be responsible for the accuracy or completeness of electronic copies of this plan sheet.

To accompany plans dated _____

STATE OF CALIFORNIA
DEPARTMENT OF TRANSPORTATION

OVERHEAD SIGNS-TRUSS FRAME JUNCTURE DETAILS

NO SCALE

ALL DIMENSIONS ARE IN MILLIMETERS UNLESS OTHERWISE SHOWN

RSP S7 DATED OCTOBER 26, 2000 SUPERSEDES STANDARD PLAN S7 DATED JULY 1, 1999-PAGE 224 OF THE STANDARD PLANS BOOK DATED JULY 1999.

REVISED STANDARD PLAN RSP S7

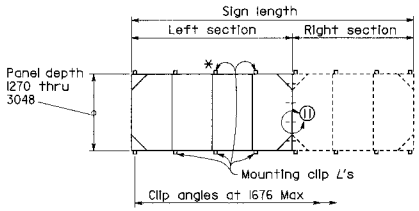

REMOVABLE FRAME GREATER THAN 6.10 m

* 2794 & 3048 sign panel frames will project above the top chord of the truss. In these cases the top clips shall be bolted to vertical frame members. See Standard Plan S8D for details.

Sign Length (m)	Left Section (m)	Right Section (m)
6.71	3.66	3.05
7.32	3.66	3.66
7.93	3.66	4.27
8.54	4.88	3.66
9.15	4.88	4.27
9.76	4.88	4.88
10.37	4.88	5.49
10.98	6.10	4.88
11.59	6.10	5.49
12.20	6.10	6.10

NOTES

Frames for signs greater than 6.10 m in length shall be fabricated in two sections with left section a multiple of 1220 in length. See table above.

Sections shall be hoisted into place individually and bolted together as per detail 11 prior to tightening of mounting clip bolts.

Bolting two sections together and hoisting simutaneously will not be permitted.

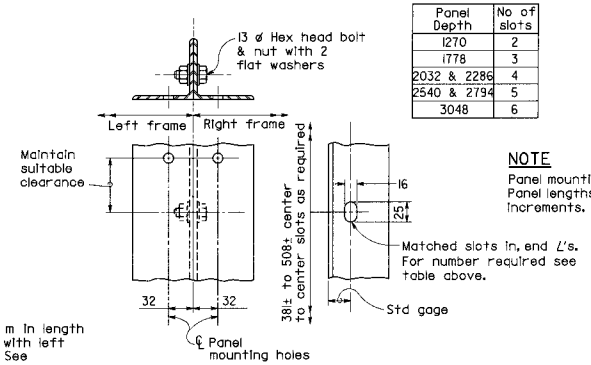

Panel Depth	No of slots
1270	2
1778	3
2032 & 2286	4
2540 & 2794	5
3048	6

DETAIL 11

NOTE

Panel mounting holes not shown. Panel lengths available in 610 increments.

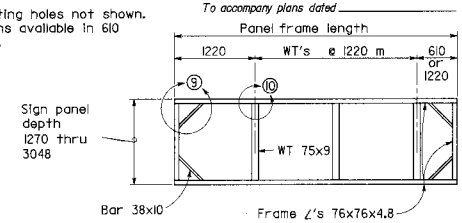

TYPICAL REMOVABLE FRAME

(1220 thru 6096)

NOTES

1. Frames shall be all-welded construction.
2. Panel mounting holes shall be drilled by template. Sign panel may be considered a template.
3. Drilled and tapped holes 6.34 mm may be used where interference due to welds or structural members is encountered.
4. WT 75 x 9 shall be flush with faces of frame angles.
5. Mounting clip angles shall be located such as to allow the top and bottom frame angles of the removable sign panel to lie on a straight horizontal line.
6. Holes for mounting removable sign panel frame may be slotted 25 mm maximum parallel to the axis of the sign.
7. WT 75 x 9 may be crimped at ends to join frame angles. Fillet weld all around.

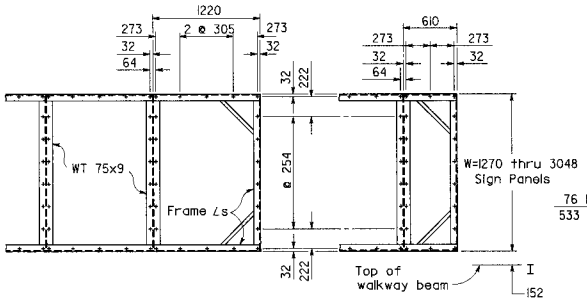

TYPICAL 1220 PANEL TYPICAL 610 PANEL

All holes 13 diameter maximum.

MOUNTING HOLE SPACING SIGN PANEL & FRAME

Hole spacing is for single sheet sign panels. For Overhead Formed Panels refer to "Overhead Formed Panel" Sheet.

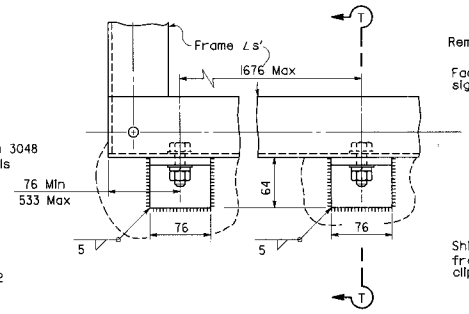

FRAME MOUNTING DETAILS

Details shown apply for sign panel frames ≤ 2540 mm deep. Mounting details for deeper panels shown on Standard Plan S8D.

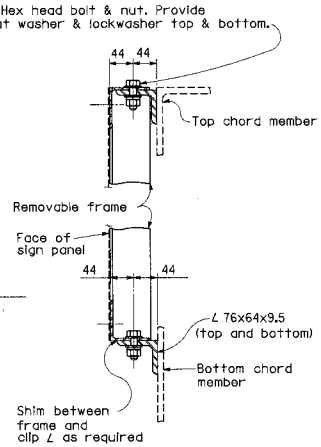

SECTION T-T

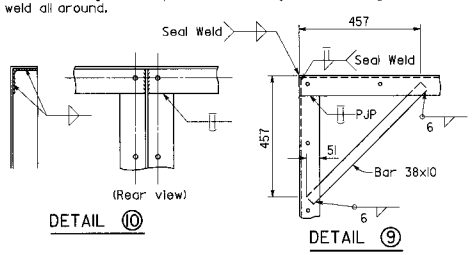

DETAIL 10 DETAIL 9

TYPICAL JOINT DETAILS

STATE OF CALIFORNIA
DEPARTMENT OF TRANSPORTATION

OVERHEAD SIGNS
STEEL FRAMES
REMOVABLE SIGN PANEL FRAMES

NO SCALE

ALL DIMENSIONS ARE IN MILLIMETERS UNLESS OTHERWISE SHOWN

RSP S8A DATED OCTOBER 26, 2000 SUPERSEDES STANDARD PLAN S8A DATED JULY 1, 1999-PAGE 225 OF THE STANDARD PLANS BOOK DATED JULY 1999.

REVISED STANDARD PLAN RSP S8A

Caltrans Metric

DIST	COUNTY	ROUTE	KILOMETER POST TOTAL PROJECT	SHEET NO.	TOTAL SHEETS

REGISTERED CIVIL ENGINEER

October 26, 2000
PLANS APPROVAL DATE

REGISTERED PROFESSIONAL ENGINEER Jeffrey B. Woody No. C41260 Exp. 3-31-03 CIVIL STATE OF CALIFORNIA

The State of California or its officers or agents shall not be responsible for the accuracy or completeness of electronic copies of this plan sheet.

To accompany plans dated _____

DIST	COUNTY	ROUTE	KILOMETER POST TOTAL PROJECT	SHEET NO.	TOTAL SHEETS

Caltrans Metric

REGISTERED CIVIL ENGINEER

October 26, 2000
PLANS APPROVAL DATE

REGISTERED PROFESSIONAL ENGINEER Jeffrey B. Woody No. C41260 Exp. 3-31-03 CIVIL STATE OF CALIFORNIA

The State of California or its officers or agents shall not be responsible for the accuracy or completeness of electronic copies of this plan sheet.

To accompany plans dated _____

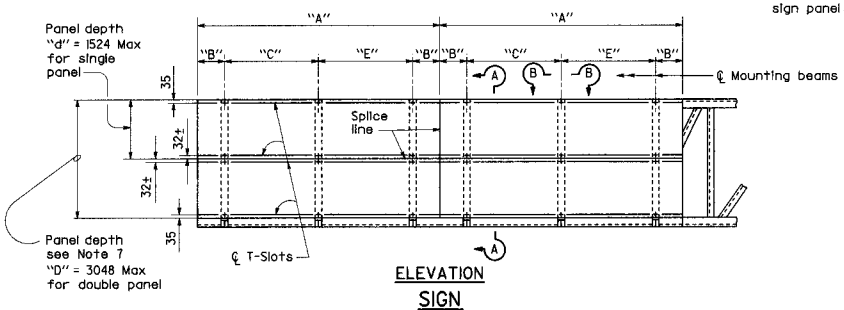

ELEVATION
SIGN

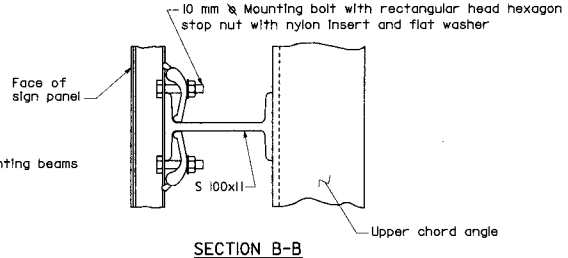

SECTION B-B

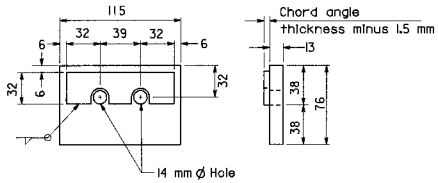

CHORD ANGLE CLAMP

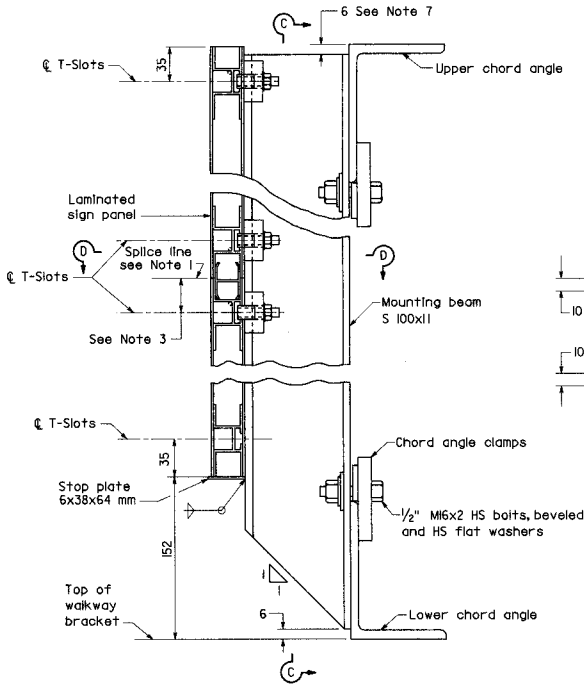

SECTION A-A

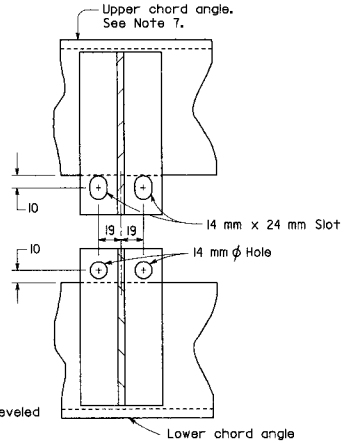

SECTION C-C

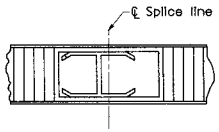

SECTION D-D

MOUNTING BEAM SPACING TABLE

SIGN PANEL LENGTH * (m)	NUMBER MOUNTING BEAMS	SIGN PANEL OVERHANG (mm)	MOUNTING BEAM SPACING (m)	(m)
"A"		"B"	"C"	"E"
1.52	2	229	1.02	
1.83	2	305	1.22	
2.13	2	381	1.37	
2.44	2	458	1.52	
2.74	2	559	1.63	
3.05	2	610	1.83	
3.35	2	610	2.13	
3.66	2	762	2.13	
3.96	2	762	2.44	
4.27	2	762	2.74	
4.57	2	915	2.74	
4.88	3	153	2.29	2.29
5.18	3	305	2.29	2.29
5.49	3	305	2.44	2.44
5.79	3	305	2.59	2.59
6.10	3	458	2.59	2.59
6.40	3	458	2.74	2.74
6.71	3	610	2.74	2.74
7.01	3	762	2.74	2.74
7.32	3	915	2.74	2.74

* Signs longer than 7.32 meters are fabricated and mounted as adjoining single panels.

NOTES

1. The size and number of individual sign panel plus the location of splice line is dependent on the sign panel manufacturer.
2. Mounting bolts are required on each side of the horizontal splice lines.
3. Dimension varies from panel to panel. Average value approximate 32 mm.
4. Torque aluminum sign panel mounting bolts to 12 Nm.
5. Chord angle clamp to be galvanized after fabrication.
6. The Contractor shall verify all dependent dimensions in the field before ordering or fabricating any material.
7. 2750 mm and 3000 mm sign panel along with the mounting beams will project above the top chord truss member 254 mm and 508 mm respectively. Attachment details shall be the same.

STATE OF CALIFORNIA
DEPARTMENT OF TRANSPORTATION

OVERHEAD SIGNS-TRUSS SIGN MOUNTING DETAILS LAMINATED PANEL-TYPE A

NO SCALE

ALL DIMENSIONS ARE IN MILLIMETERS UNLESS OTHERWISE SHOWN

RSP S8C DATED OCTOBER 26, 2000 SUPERSEDES STANDARD PLAN S8C DATED JULY 1, 1999-PAGE 227 OF THE STANDARD PLANS BOOK DATED JULY 1999.

REVISED STANDARD PLAN RSP S8C

1999 REVISED STD. PLAN RSP S8C

DIST	COUNTY	ROUTE	KILOMETER POST TOTAL PROJECT	SHEET NO.	TOTAL SHEETS

REGISTERED CIVIL ENGINEER

October 26, 2000
PLANS APPROVAL DATE

REGISTERED PROFESSIONAL ENGINEER Jeffrey B. Woody No. C41260 Exp. 3-31-03 CIVIL STATE OF CALIFORNIA

The State of California or its officers or agents shall not be responsible for the accuracy or completeness of electronic copies of this plan sheet.

To accompany plans dated _____

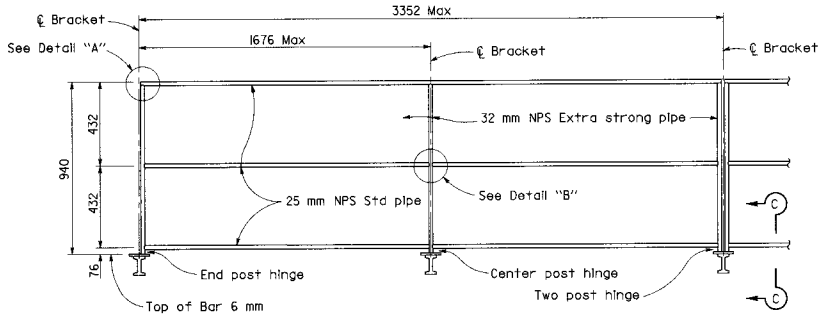

SAFETY RAILING ELEVATION

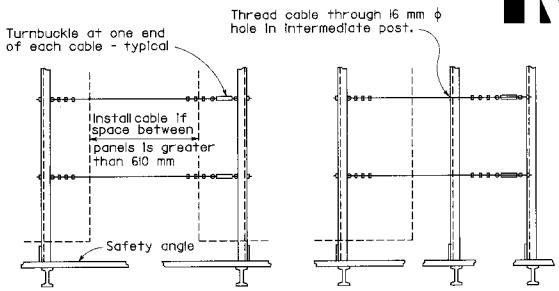

BETWEEN PANELS

BEYOND PANELS

SAFETY CABLE ELEVATION

For bridge mounted signs

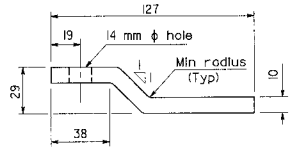

PLAN - KICKER BAR

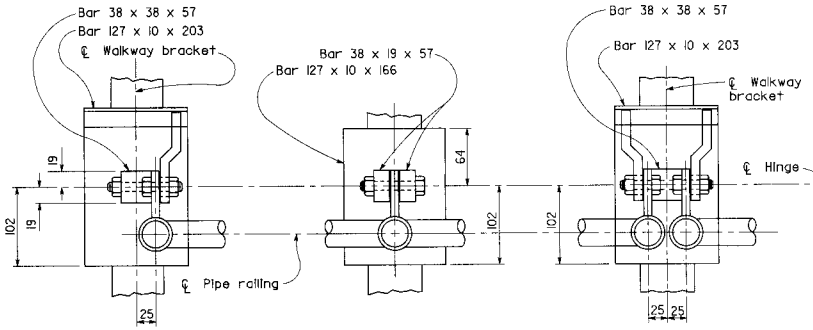

END POST

CENTER POST

WELDED HINGE - PLAN

TWO POST

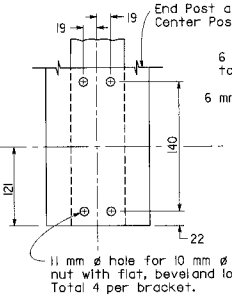

TYPICAL BOLTED (ALTERNATIVE) HINGED CONNECTION

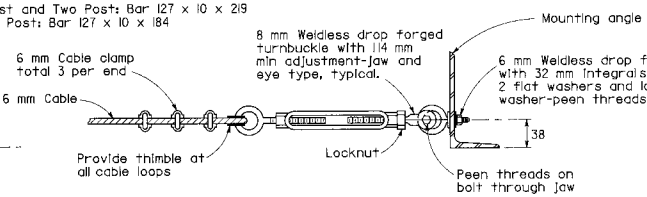

TURNBUCKLE DETAILS

NOTES

1. Special care shall be taken to insure that the complete hinge and latch assembly will hold the safety railing in a steady manner, free of wobble while in the raised position. Maximum allowable displacement from vertical at top of railing when latched shall be 25 mm.
2. Safety chain shall be 5 mm galvanized steel coil chain, approximately 39.4 links per meter. Length shall be minimum which allows lock-up of safety railing. Minimum of two safety chains per safety railing.

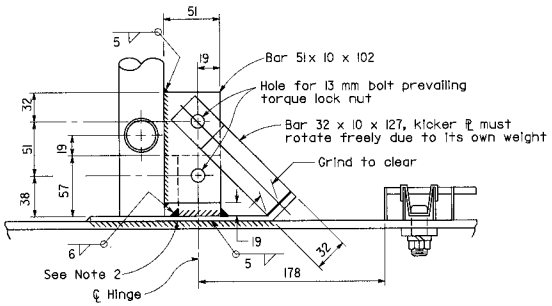

SECTION C-C

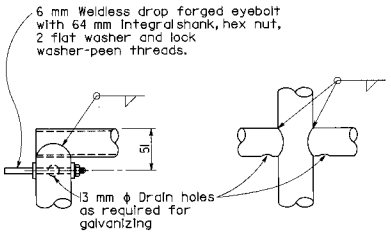

DETAIL A

DETAIL B

NOTES

Alternative venting methods may be used if approved by the Engineer.

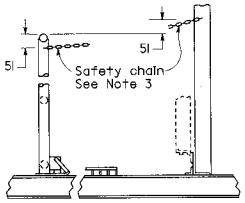

CHAIN ASSEMBLY

STATE OF CALIFORNIA
DEPARTMENT OF TRANSPORTATION

OVERHEAD SIGNS WALKWAY SAFETY RAILING DETAILS

NO SCALE

ALL DIMENSIONS ARE IN MILLIMETERS UNLESS OTHERWISE SHOWN

RSP S11 DATED OCTOBER 26, 2000 SUPERSEDES STANDARD PLAN S11 DATED JULY 1, 1999-PAGE 231 OF THE STANDARD PLANS BOOK DATED JULY 1999.

REVISED STANDARD PLAN RSP S11

1999 REVISED STD. PLAN RSP S11

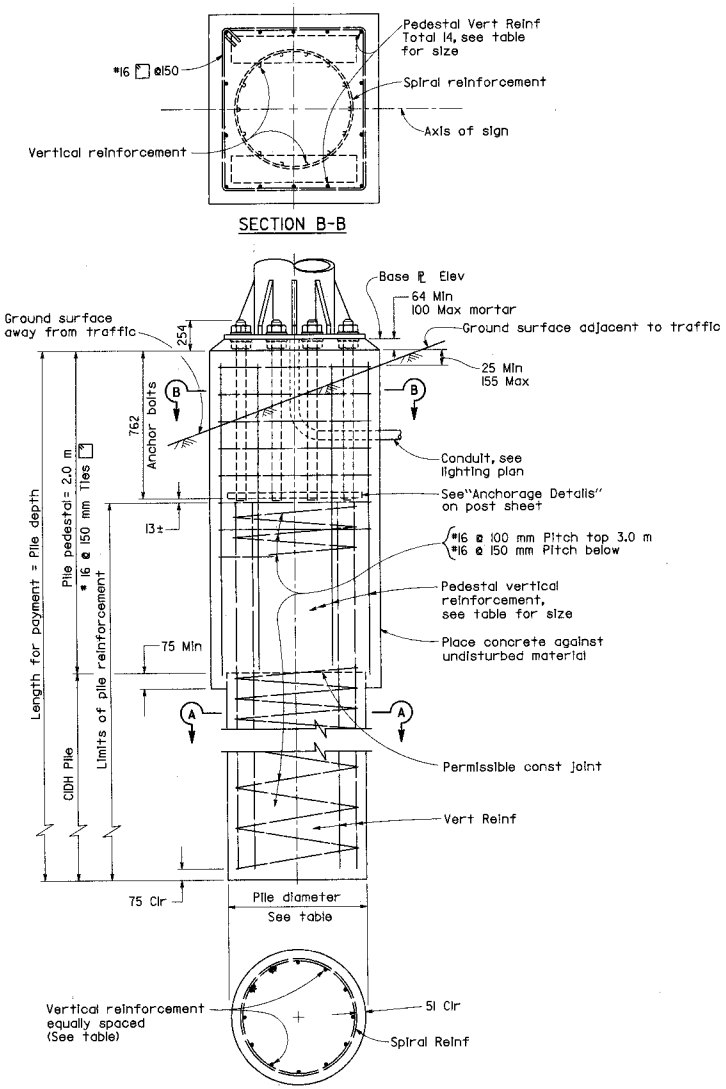

Post Type	Anchor Bolts	Pedestal Size (mm)	Reinforcing Steel Vertical	Pile Diameter (mm)	Pile Depth ** (m)
II	6-51 mm ø	890x865	14-#22	760	4.5
III	6-51 mm ø	965x865	14-#25	760	4.5
IV	6-51 mm ø	1120x1020	16-#25	920	4.5
V	10-51 mm ø	1170x1095	16-#29	920	5.5
VI	10-51 mm ø	1170x1095	16-#32	920	5.5
VII	12-51 mm ø	1295x1195	16-#36	920	6.5
I-S	8-57 mm ø	1070x1020	14-#32	920	5.5
II-S	8-57 mm ø	1070x1020	16-#32	920	6.0
III-S	8-57 mm ø	1145x1020	16-#36	920	7.0
IV-S	8-57 mm ø	1245x1020	16-#36	920	7.0
V-S	8-57 mm ø	1350x1200	*24-#36	920	8.0
VI-S	8-64 mm ø	1470x1470	28-#43	1370	8.5
VII-S	8-64 mm ø	1470x1470	28-#43	1370	8.5

** Use Foundation Depth shown in table unless otherwise shown on the Project Plans.

* Bundled bars

NOTES

1. For anchor bolt layout see post sheet.
2. For "Base ℞ elevation" see Project Plans.
3. Pedestal and pile shall be Class "2" PCC.
4. Pedestals and base plates, longer sides shall be normal to axis of sign.
5. Prior to erection of the post, backfill which is equivalent to the surrounding material shall be in place.
6. Pedestal shall be formed 150 mm minimum below ground surface. Remainder to be placed against undisturbed material.
7. Slope protection required when indicated on the Project Plans.
8. Foundation design is based on a lateral soil pressure of 86 kPa.

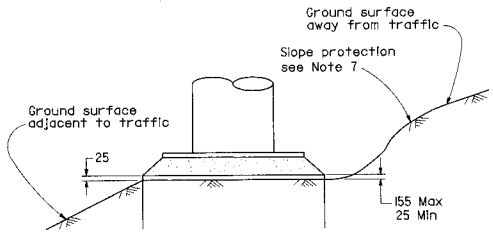

DETAIL C

Caltrans Metric

DIST	COUNTY	ROUTE	KILOMETER POST TOTAL PROJECT	SHEET NO.	TOTAL SHEETS

REGISTERED CIVIL ENGINEER

October 26, 2000
PLANS APPROVAL DATE

REGISTERED PROFESSIONAL ENGINEER Jeffrey B. Woody No. C41260 Exp. 3-31-03 CIVIL STATE OF CALIFORNIA

The State of California or its officers or agents shall not be responsible for the accuracy or completeness of electronic copies of this plan sheet.

STATE OF CALIFORNIA
DEPARTMENT OF TRANSPORTATION

OVERHEAD SIGNS-TRUSS PILE FOUNDATION

NO SCALE

ALL DIMENSIONS ARE IN MILLIMETERS UNLESS OTHERWISE SHOWN

RSP S13 DATED AUGUST OCTOBER 26, 2000 SUPERSEDES STANDARD PLAN S13 DATED JULY 1, 1999-PAGE 232 OF THE STANDARD PLANS BOOK DATED JULY 1999.

REVISED STANDARD PLAN RSP S13

1999 REVISED STD. PLAN RSP S13

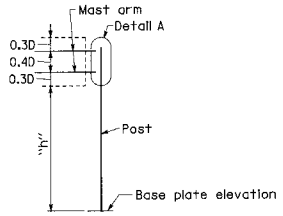

DOUBLE MASS ARM SERIES
TYPE C-1

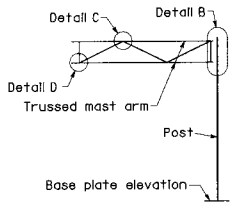

TRUSSED MASS ARM SERIES
TYPE C-2

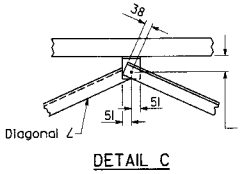

DETAIL C

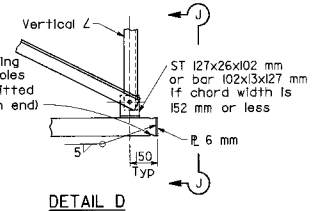

DETAIL D

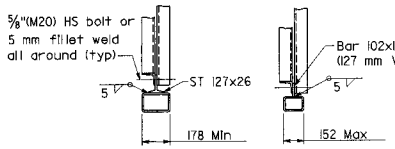

SECTION J-J

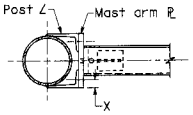

SECTION G-G

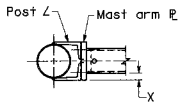

SECTION F-F

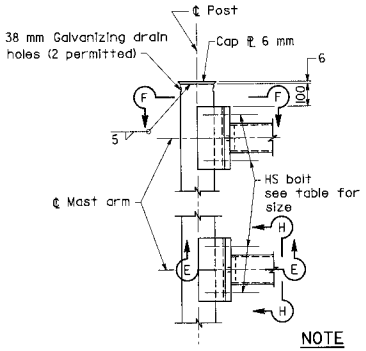

DETAIL A

NOTE

"T" equals vertical dimension of mast arm.

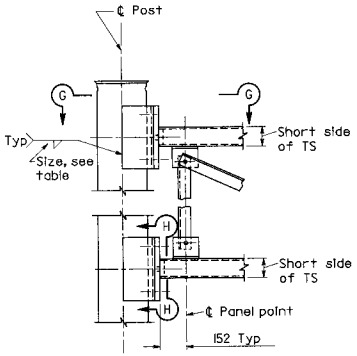

DETAIL B

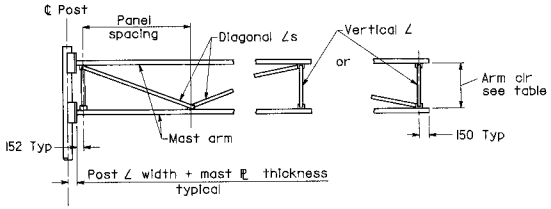

TRUSS FRAMING DATA

SIGN DEPTH (mm)	ARM CLEARANCE (mm)	MAX PANEL SPACING (mm)	VERTICAL ANGLE (mm)	DIAGONAL ANGLE (mm)
D=1016-1778	610	1321	51x51x6.4	51x51x6.4
D=2032-2540	914	1981	89x64x6.4*	89x64x6.4*

*Short leg outstanding

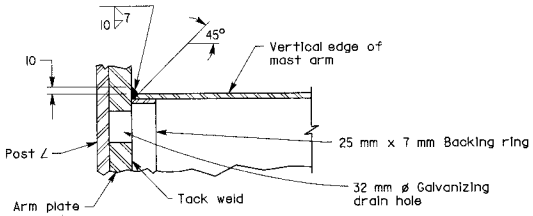

SECTION E-E

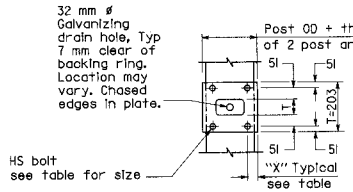

SECTION H-H

NOTE

"T" equals vertical dimension of mast arm.

Bottom connection shown.
Top similar.

DIST	COUNTY	ROUTE	KILOMETER POST TOTAL PROJECT	SHEET NO.	TOTAL SHEETS

REGISTERED CIVIL ENGINEER
October 26, 2000
PLANS APPROVAL DATE

REGISTERED PROFESSIONAL ENGINEER Jeffrey B. Woody No. C41260 Exp. 3-31-03 CIVIL STATE OF CALIFORNIA

The State of California or its officers or agents shall not be responsible for the accuracy or completeness of electronic copies of this plan sheet.

To accompany plans dated _____

POST ANGLES

POST SIZE	ANGLE (mm)	X (mm)	WELD (mm)
6	∠127x76x12.7	44	7
8	∠152x102x15.9	57	7
10	∠178x102x15.9	57	7
12	∠203x102x19.0	57	8
14	∠203x102x19.0	57	8

POST TO ARM FRAMING DATA

MAST ARM PLATE

TWO ARMS	TRUSSED ARMS	PLATE (mm)	H.S. BOLT
TS 76x76x6.4		19	1/2" (M16)
TS 102x102x6.4		25.4	5/8" (M16)
TS 127x127x6.4		25.4	3/4" (M20)
TS 152x152x6.4		25.4	3/4" (M20)
TS 178x178x6.4	TS 127x76x9.5	32	3/4" (M20)
	TS 152x102x9.5	32	7/8" (M22)
	TS 178x127x9.5	32	7/8" (M22)
	TS 203x152x9.5	32	7/8" (M22)
	TS 254x152x9.5	32	1" (M27)

NOTES

For post connection to base ℞ see S20A

For mast arm length and mast-arm-to sign panel connections see S18A

See other plan sheets for:
1. Sign type and location.
2. Panel type and location on structure.
3. Post size and dimension "h".
4. Mast arm size.
5. Foundation type.
6. Illumination if required.

For General Notes see S20A

STATE OF CALIFORNIA
DEPARTMENT OF TRANSPORTATION

OVERHEAD SIGNS-LIGHTWEIGHT TYPE C CONNECTION DETAILS

NO SCALE

ALL DIMENSIONS ARE IN MILLIMETERS UNLESS OTHERWISE SHOWN

RSP S17 DATED OCTOBER 26, 2000 SUPERSEDES STANDARD PLAN S17 DATED JULY 1, 1999-PAGE 237 OF THE STANDARD PLANS BOOK DATED JULY 1999.

REVISED STANDARD PLAN RSP S17

DIST	COUNTY	ROUTE	KILOMETER POST TOTAL PROJECT	SHEET NO.	TOTAL SHEETS

REGISTERED CIVIL ENGINEER

October 26, 2000
PLANS APPROVAL DATE

REGISTERED PROFESSIONAL ENGINEER Jeffrey B. Woody No. C41260 Exp. 3-31-03 CIVIL STATE OF CALIFORNIA

The State of California or its officers or agents shall not be responsible for the accuracy or completeness of electronic copies of this plan sheet.

To accompany plans dated _____

Drill and tap for ¾ NPS short nipple and plug with recessed pipe plug. Same side as sign face. See "Fluorescent Sign Lighting Equipment Integral Ballast - Sign Control Equipment Installations".

Drill and tap for 1½ NPS chase nipples and plug with recessed pipe plugs. Place perpendicular to sign panel axis away from approaching traffic. See Standard Plan ES-15C.

Lower edge of plate or angle at bottom post to arm connection

180

1.83 m

460

Handhole and cover on axis of sign. Required on illuminated signs only.

ELEVATION

NOTE

Drill holes, plugs and handhole required on illuminated signs only.

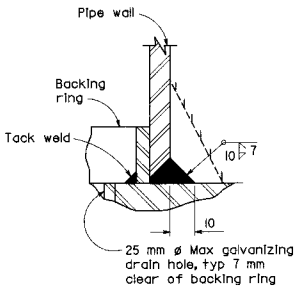

DETAIL A

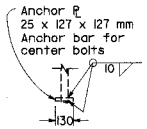

SINGLE SIDE BOLT

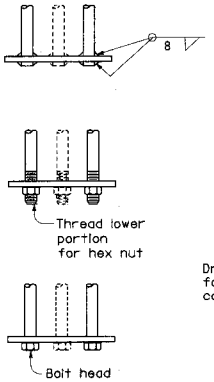

ALTERNATIVE BAR CONNECTIONS

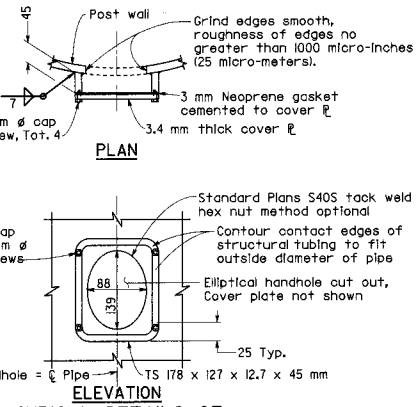

TYPICAL DETAILS OF HANDHOLE AND COVER

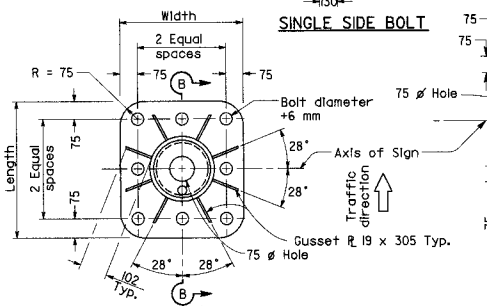

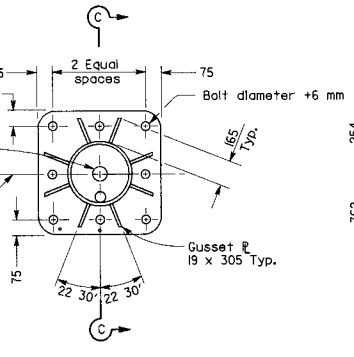

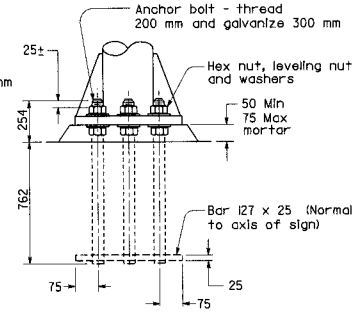

ANCHORAGE BOLT

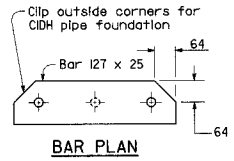

BAR PLAN

ANCHORAGE DETAILS

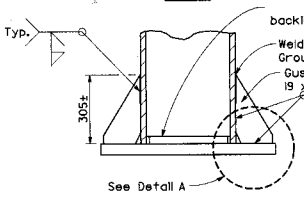

SECTION B-B
6 NPS THRU 8 NPS POSTS

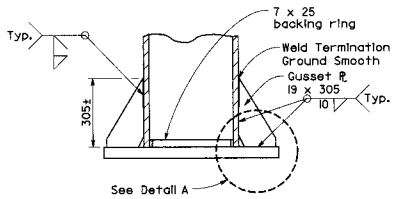

SECTION C-C
10 NPS THRU 14 NPS POSTS

BASE PLATE DETAILS

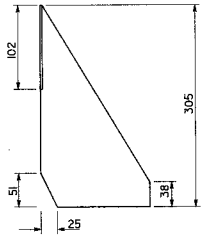

GUSSET DETAIL

GENERAL NOTES

DESIGN: AASHTO Standard Specifications for Structural Supports for Highway Signs, Luminaires and Traffic Signals, dated 1994.

CONSTRUCTION: Standard Specifications and the Special Provision.

WELDING: All welding continuous unless otherwise noted on the plans. All welding to be done in accordance with the Standard Specifications.

NOTES

1. Footing shall be placed with long dimensions normal to axis of sign.
2. On single post signs the post shall be raked out of the sign frame level.
3. 51mm ø anchor bolts may be substituted for 45 mm ø bolts. 64 mm ø anchor bolts may be substituted for 57 mm ø bolts.

Post Size		Base Plate (mm)	Anchor Bolts	
NPS	"t" (mm)		#	Bolt ø
6	7.11	51 x 534 x 534	8	51 mm
6	10.97	51 x 534 x 534	8	51 mm
8	8.18	51 x 534 x 534	8	51 mm
8	12.7	51 x 534 x 534	8	51 mm
10	12.7	51 x 715 x 715	8	57 mm
12	12.7	51 x 715 x 715	8	57 mm
14	12.7	51 x 715 x 715	8	57 mm
14	19.0	51 x 715 x 715	8	57 mm

"t" = Wall Thickness

STATE OF CALIFORNIA
DEPARTMENT OF TRANSPORTATION

OVERHEAD SIGNS-LIGHTWEIGHT POST DETAILS

NO SCALE

ALL DIMENSIONS ARE IN MILLIMETERS UNLESS OTHERWISE SHOWN

RSP S20A DATED OCTOBER 26, 2000 SUPERSEDES STANDARD PLAN S20A DATED JULY 1, 1999-PAGE 240 OF THE STANDARD PLANS BOOK DATED JULY 1999.

REVISED STANDARD PLAN RSP S20A

1999 REVISED STD. PLAN RSP S20A

POST SIZE		PILE FOUNDATION				SPREAD FOOTING				
NPS	"t" (mm)	Pedestal (mm)	Pile Dia (mm)	Pile Depth (m)	Vertical Reinf	Pedestal (mm)	Footing (m)	Reinforcement Top	Bottom	L Bar
6	7.11	864 x 864	762	3.0	#19	762 x 762	1.3 x 1.9	#16	#16	#16
6	10.97	864 x 864	762	3.0	#19	762 x 762	1.3 x 2.2	#16	#16	#16
8	8.18	864 x 864	762	3.0	#19	762 x 762	1.6 x 2.5	#16	#16	#16
8	12.7	864 x 864	762	3.4	#22	762 x 762	1.9 x 2.8	#16	#16	#16
10	12.7	1016 x 1016	914	4.0	#25	914 x 914	2.2 x 3.1	#16	#25	#25
12	12.7	1016 x 1016	914	4.6	#32	914 x 914	2.2 x 3.7	#19	#25	#25
14	12.7	1016 x 1016	914	4.6	#32	914 x 914	2.2 x 4.0	#25	#29	#25
14	15.88	1016 x 1016	914	4.9	#32	914 x 914	2.5 x 4.3	#25	#29	#25

NOTES

1. Backfill shall be in place prior to erection of post.
2. Slope protection required when indicated on the plans.
3. Pile pedestal shall be formed 155 mm minimum below ground surface. Remainder to be placed against undisturbed material.

Caltrans Metric

DIST	COUNTY	ROUTE	KILOMETER POST TOTAL PROJECT	SHEET NO.	TOTAL SHEETS

REGISTERED CIVIL ENGINEER

October 26, 2000
PLANS APPROVAL DATE

REGISTERED PROFESSIONAL ENGINEER Jeffrey B. Woody No. C41260 Exp. 3-31-03 CIVIL STATE OF CALIFORNIA

The State of California or its officers or agents shall not be responsible for the accuracy or completeness of electronic copies of this plan sheet.

To accompany plans dated _____

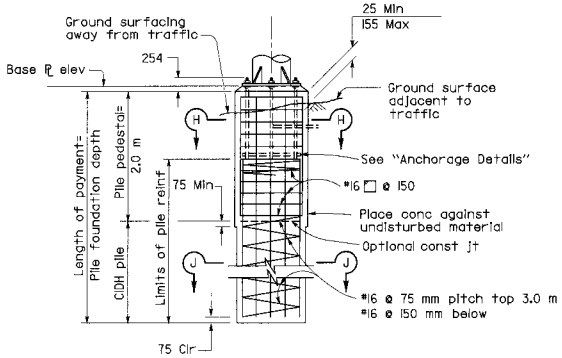

ELEVATION

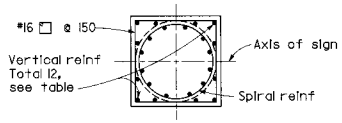

SECTION H-H

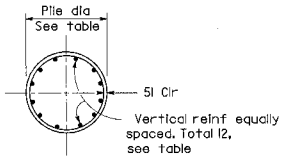

SECTION J-J
6 NPS THRU 14 NPS POSTS
PILE FOUNDATION

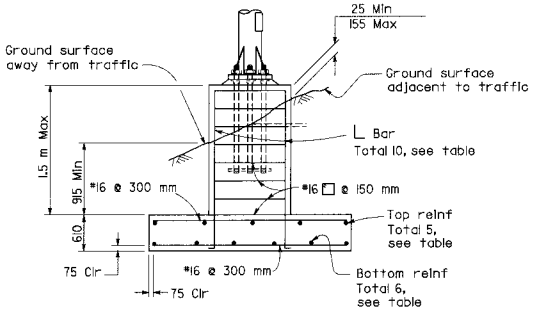

ELEVATION

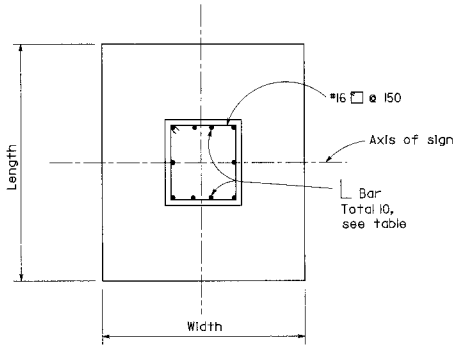

PLAN
SPREAD FOOTING

STATE OF CALIFORNIA
DEPARTMENT OF TRANSPORTATION

OVERHEAD SIGNS-LIGHTWEIGHT FOUNDATION DETAILS

NO SCALE

ALL DIMENSIONS ARE IN MILLIMETERS UNLESS OTHERWISE SHOWN

RSP S20B DATED OCTOBER 26, 2000 SUPERSEDES STANDARD PLAN S20B DATED JULY 1, 1999-PAGE 241 OF THE STANDARD PLANS BOOK DATED JULY 1999.

REVISED STANDARD PLAN RSP S20B

1999 REVISED STD. PLAN RSP S20B

DIST	COUNTY	ROUTE	KILOMETER POST TOTAL PROJECT	SHEET NO.	TOTAL SHEETS

REGISTERED CIVIL ENGINEER

October 26, 2000
PLANS APPROVAL DATE

The State of California or its officers or agents shall not be responsible for the accuracy or completeness of electronic copies of this plan sheet.

REGISTERED PROFESSIONAL ENGINEER Jeffrey B. Woody No. C41260 Exp. 3-31-03 CIVIL STATE OF CALIFORNIA

To accompany plans dated _____

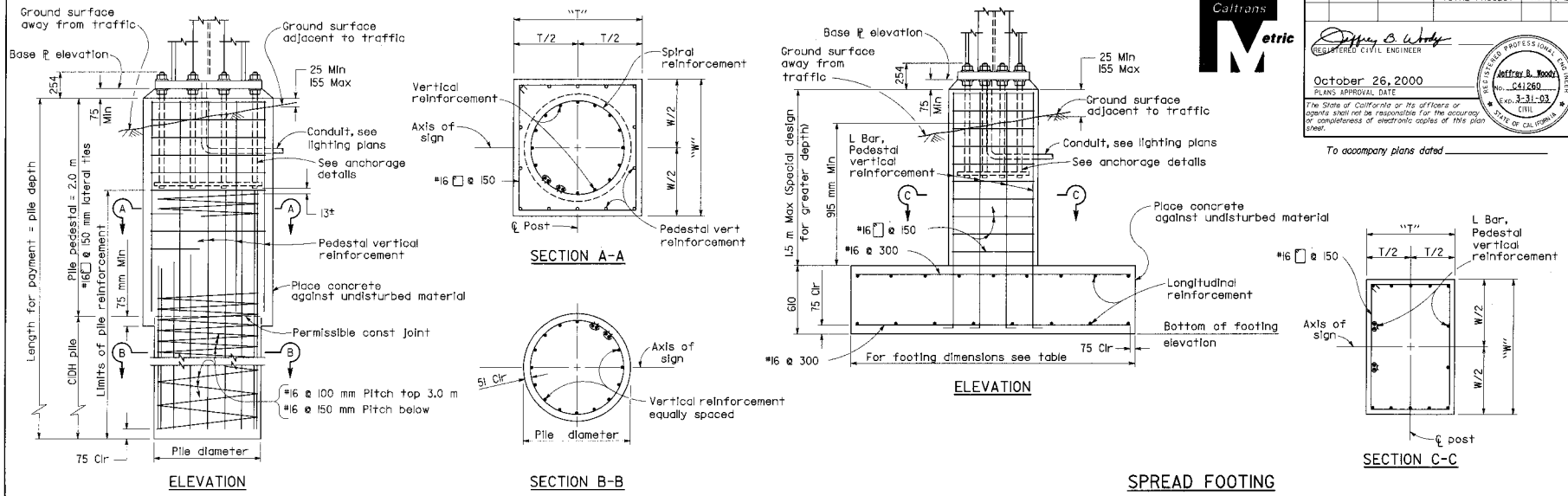

PILE FOUNDATION

SPREAD FOOTING

TWO POST TYPE											
Post Type	Pedestal Size "T" x "W" (m) x (m)	Pile Foundation			Spread Footing						
		Vertical Reinf	Pile Dia (mm)	Pile Depth (m)	Pedestal Vert Reinf	Footing Dimension (m)	Top Reinf		Bottom Reinf	
							Longit	Transv	Longit	Transv
A-1	1.050 x 1.250	16-#25	920	4.3	14-#22	2.2 x 4.9	7-#16	#16 @ 300	6-#29	#16 @ 300
A-2		16-#29		4.9	14-#25	2.5 x 5.2	10-#16		10-#29	
A-3		16-#36		6.1	14-#29	2.5 x 5.5	8-#19		9-#36	
A-4		*24-#36		6.4	14-#29	2.5 x 6.1	8-#25		11-#36	
A-5		*24-#36		6.4	14-#32	2.5 x 6.1	8-#25		11-#36	
B-1	1.05 x 1.35	*16-#36		6.1	14-#25	2.5 x 5.5	8-#19		9-#36	
B-2	1.05 x 1.35	*24-#36		6.7	14-#29	2.5 x 6.1	10-#19		11-#36	
B-3	1.05 x 1.40	*28-#36		7.4	14-#32	2.5 x 6.4	7-#25		13-#36	
B-4	1.20 x 1.40	*24-#36	1070	6.7	14-#32	2.5 x 6.7	7-#25		14-#36	
B-5	1.20 x 1.40	*24-#36	1070	7.0	14-#32	2.5 x 7.1	8-#25		15-#36	
C-1	1.05 x 1.05	16-#29	920	4.9	14-#22	2.2 x 4.9	6-#19		7-#36	
C-2	1.05 x 1.15	16-#36		5.8	14-#29	2.5 x 5.2	8-#19		9-#36	
C-3	1.05 x 1.15	*24-#36		6.4	14-#32	2.5 x 5.8	9-#19		11-#36	
C-4	1.05 x 1.15	*28-#36		7.4	14-#32	2.5 x 6.4	7-#25		13-#36	
C-5	1.20 x 1.20	*24-#36	1070	6.7	14-#36	2.5 x 6.7	8-#25		15-#36	
C-6		*24-#36		7.1	14-#36	2.5 x 7.1	8-#25		16-#36	
C-7		*28-#36		7.4	14-#36	2.5 x 7.1	8-#25		12-#43	
C-8		*34-#36		7.7	*28-#32	2.5 x 7.4	9-#25		13-#43	
D-1	1.05 x 1.25	*24-#36	920	6.4	14-#29	2.5 x 5.8	9-#19		10-#36	
D-2	1.05 x 1.30	*28-#36	920	7.4	14-#32	2.5 x 6.4	7-#25		13-#36	
D-3	1.20 x 1.30	*24-#36	1070	7.4	14-#36	2.5 x 7.1	8-#25		16-#36	
D-4		*34-#36		8.3	14-#36	2.5 x 7.1	8-#25		18-#36	
D-5		*34-#36		9.2	*28-#32	2.5 x 7.7	9-#25		14-#43	
D-6	1.30 x 1.40	*34-#36		9.2	14-#36	2.5 x 8.0	10-#25		14-#43	
D-7		*34-#36		9.2	14-#36	2.5 x 8.0	10-#25	#16 @ 300	15-#43	#16 @ 300

* Bundled bars

SINGLE POST TYPE											
Post Type	Pedestal Size "T" x "W" (m) x (m)	Pile Foundation			Spread Footing						
		Vertical Reinf	Pile Dia (mm)	Foundation Depth (m)	Pedestal Vert Reinf	Footing Dimension (m)	Top Reinf		Bottom Reinf	
							Longit	Transv	Longit	Transv
E-1	1.02 x 1.12	16-#25	920	4.0	14-#25	2.5x 4.3	6-#16	#16 @ 300	9-#22	#16 @ 300
E-2	1.02 x 1.12	16-#29		4.6	14-#29	2.8 x 4.6	6-#19		9-#29	
E-3	1.12 x 1.12	16-#32		5.5	14-#32					
E-4	1.12 x 1.12	16-#36		6.1	14-#36					
F-1	1.02 x 1.12	16-#25		4.0	14-#22	2.5 x 4.0	8-#16	#16 @ 300	10-#22	#16 @ 300
F-2		16-#29		4.6	14-#22	2.5 x 4.6	8-#16		11-#25	
F-3		16-#29		4.9	14-#25	2.5 x 4.9	9-#16		10-#29	
F-4		16-#36		5.8	14-#29	2.5 x 5.8	6-#19		10-#36	
F-5		16-#36		6.7	14-#32	2.5 x 6.1	10-#19	#16 @ 300	12-#36	#16 @ 300

NOTES

1. Base plates, pedestals and footings; longer sides shall be normal to axis of sign.
2. For anchor bolt layout see Standard Plans S40F and S40J.
3. For base plate elevation see Format sheet.
4. Prior to erection of the post, backfill which is equivalent to the surrounding material shall be in place.
5. Pile pedestal shall be formed 155 mm minimum below ground surface. Remainder to be placed against undisturbed material.
6. Pile footing - use foundation depth shown in table unless otherwise shown on Format sheet.
7. On single post sign structures the post shall be raked out of plumb with the use of the levelling nuts to make the bottom of the sign frame level.

STATE OF CALIFORNIA
DEPARTMENT OF TRANSPORTATION

OVERHEAD SIGNS-BOX BEAM CLOSED TRUSS FOUNDATION DETAILS

NO SCALE

ALL DIMENSIONS ARE IN MILLIMETERS UNLESS OTHERWISE SHOWN

RSP S39 DATED OCTOBER 26, 2000 SUPERSEDES STANDARD PLAN S39 DATED JULY 1, 1999-PAGE 242 OF THE STANDARD PLANS BOOK DATED JULY 1999.

REVISED STANDARD PLAN RSP S39

DIST	COUNTY	ROUTE	KILOMETER POST TOTAL PROJECT	SHEET NO.	TOTAL SHEETS

REGISTERED CIVIL ENGINEER

October 26, 2000
PLANS APPROVAL DATE

REGISTERED PROFESSIONAL ENGINEER Jeffrey B. Woody No. C41260 Exp. 3-31-03 CIVIL STATE OF CALIFORNIA

The State of California or its officers or agents shall not be responsible for the accuracy or completeness of electronic copies of this plan sheet.

To accompany plans dated _____

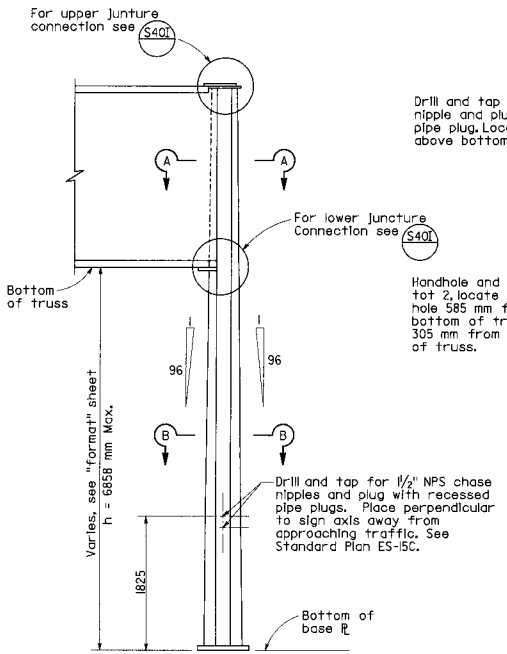

ELEVATION

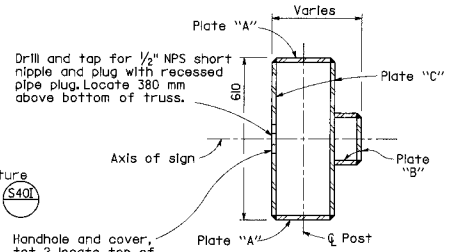

SECTION A-A

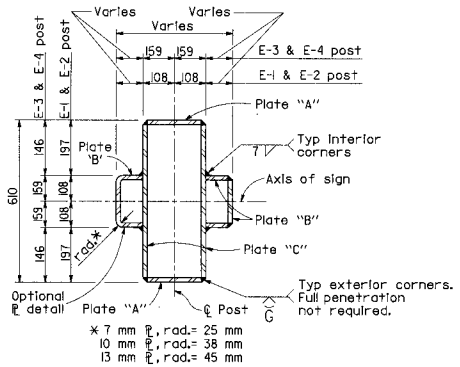

SECTION B-B

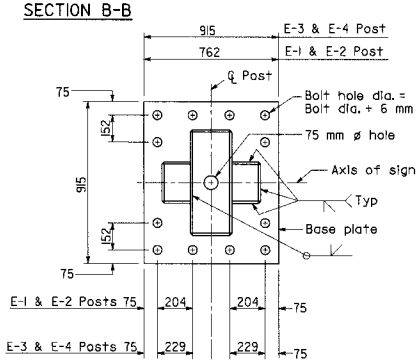

BASE PLATE

Post Type	Base Plate (mm)	Plate "A" (mm)	Plate "B" (mm)	Plate "C" (mm)	* Anchor Bolts (mm)
E-1	51x762x915	12.7	6.4	9.5	12-45 mm ø
E-2	64x762x915	25.4	9.5	12.7	12-51 mm ø
E-3	64x915x915	25.4	9.5	12.7	12-57 mm ø
E-4	64x915x915	25.4	12.7	15.9	12-57 mm ø

* 51 mm ø Anchor bolts may be substituted for 45 mm ø bolts.

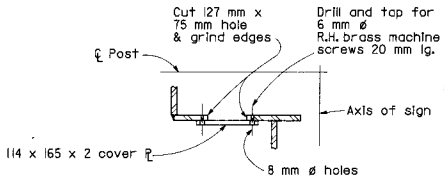

NOTE

Face handhole and cover PL away from traveled way except as shown. See "Section A-A".

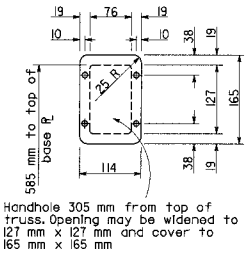

HANDHOLE AND COVER DETAIL

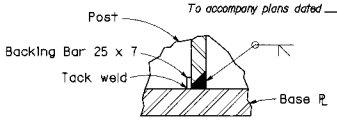

POST TO BASE PLATE WELDING DETAILS

NOTE

1. For foundation details see S39

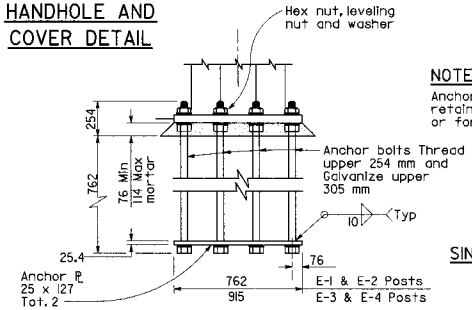

ANCHORAGE DETAILS

NOTE

Anchor PLs may be retained with hex nuts or formed heads.

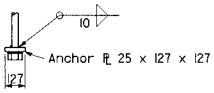

SINGLE SIDE BOLT

STATE OF CALIFORNIA
DEPARTMENT OF TRANSPORTATION

OVERHEAD SIGNS-BOX BEAM CLOSED TRUSS SINGLE POST CANTILEVER POST DETAILS

NO SCALE

ALL DIMENSIONS ARE IN MILLIMETERS UNLESS OTHERWISE SHOWN

RSP S40J DATED OCTOBER 26, 2000 SUPERSEDES STANDARD PLAN S40J DATED JULY 1, 1999-PAGE 252 OF THE STANDARD PLANS BOOK DATED JULY 1999.

REVISED STANDARD PLAN RSP S40J

DIST	COUNTY	ROUTE	KILOMETER POST TOTAL PROJECT	SHEET NO.	TOTAL SHEETS

Caltrans Metric

REGISTERED CIVIL ENGINEER — October 26, 2000 — PLANS APPROVAL DATE

REGISTERED PROFESSIONAL ENGINEER Jeffrey B. Woody No. C41260 Exp. 3-31-03 CIVIL STATE OF CALIFORNIA

The State of California or its officers or agents shall not be responsible for the accuracy or completeness of electronic copies of this plan sheet.

To accompany plans dated _____

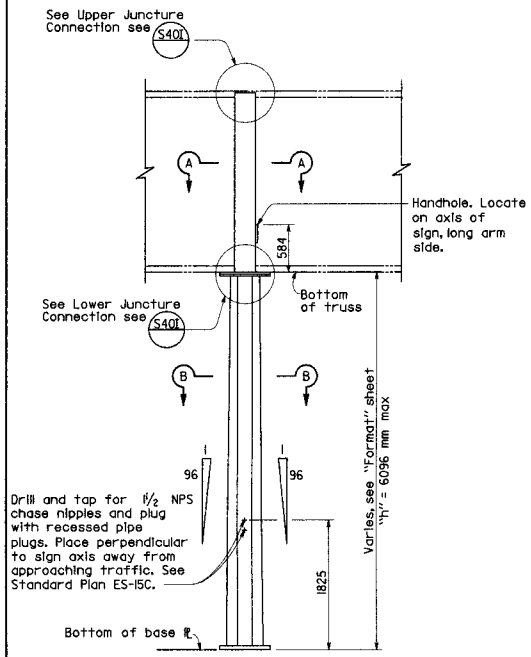

ELEVATION

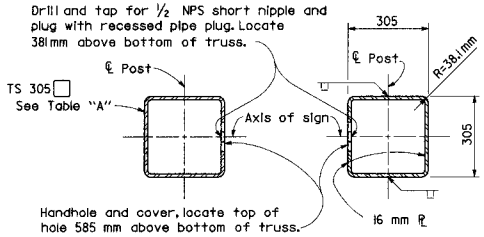

TYPE F-1 THRU F-3 TYPE F-4 AND F-5

SECTION A-A

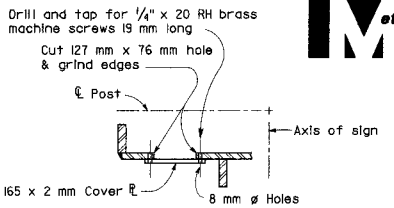

NOTE

Face handhole away from traveled way. On F-1 type post locate handhole on centerline post in Plate "A".

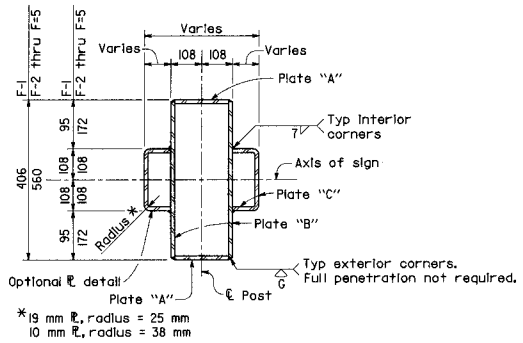

SECTION B-B

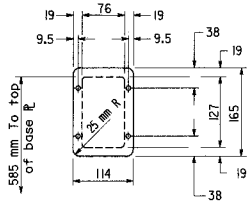

NOTE

For foundation details see S39

HANDHOLE AND COVER DETAIL

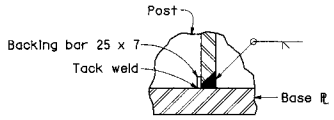

PLATES A, B AND C POST TO BASE PLATE WELDING DETAILS

TABLE "A"						
Post Type	Plate "A" (mm)	Plate "B" (mm)	Plate "C" (mm)	Base Plate (mm)	* Anchor Bolts No & Dia	Structural Tube
F-1	6.4x204	6.4	6.4	51x762x915	8-51mm ø	305x305x7.9
F-2	12.7x204	6.4	6.4	51x762x915	12-45 mm ø	305x305x9.5
F-3	38.1x204	6.4	6.4	51x762x915	12-51mm ø	305x305x12.7
F-4	38.1x197	9.5	9.5	64x762x915	12-57 mm ø	See Section A-A
F-5	38.1x178	19.1	19.1	70x762x915	12-57 mm ø	

* 51mm ϕ Anchor bolts may be substituted for 45 mm ϕ bolts.

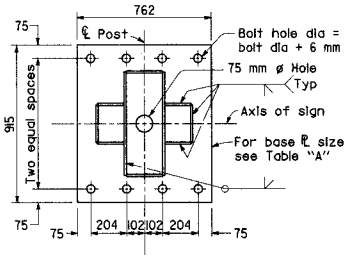

TYPE F-1

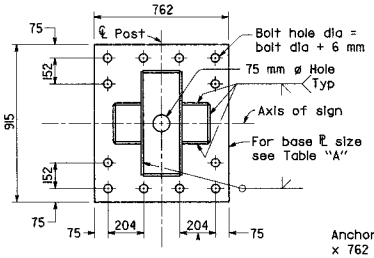

TYPE F-2 THRU F-5

BASE PLATE DETAILS

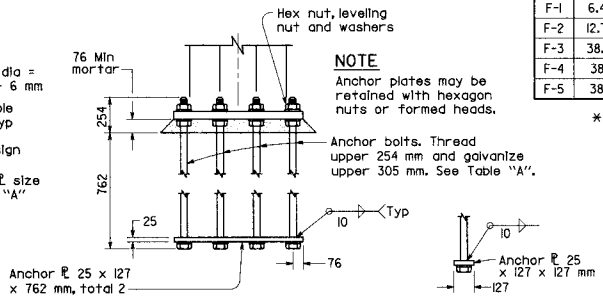

NOTE

Anchor plates may be retained with hexagon nuts or formed heads.

Anchor bolts. Thread upper 254 mm and galvanize upper 305 mm. See Table "A".

SINGLE SIDE BOLT

ANCHORAGE DETAILS

STATE OF CALIFORNIA
DEPARTMENT OF TRANSPORTATION

OVERHEAD SIGNS-BOX BEAM CLOSED TRUSS SINGLE POST BUTTERFLY POST DETAILS

NO SCALE

ALL DIMENSIONS ARE IN MILLIMETERS UNLESS OTHERWISE SHOWN

RSP S40M DATED OCTOBER 26, 2000 SUPERSEDES STANDARD PLAN S40M DATED JULY 1, 1999-PAGE 255 OF THE STANDARD PLANS BOOK DATED JULY 1999.

REVISED STANDARD PLAN RSP S40M

1999 STD. PLAN RSP S40M

DIST	COUNTY	ROUTE	KILOMETER POST TOTAL PROJECT	SHEET NO.	TOTAL SHEETS

Caltrans Metric

REGISTERED CIVIL ENGINEER

October 26, 2000
PLANS APPROVAL DATE

REGISTERED PROFESSIONAL ENGINEER Jeffrey B. Woody No. C41260 Exp. 3-31-03 CIVIL STATE OF CALIFORNIA

The State of California or its officers or agents shall not be responsible for the accuracy or completeness of electronic copies of this plan sheet.

To accompany plans dated _____

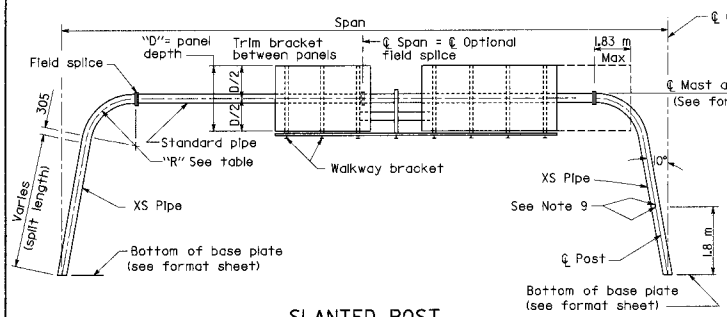

SLANTED POST

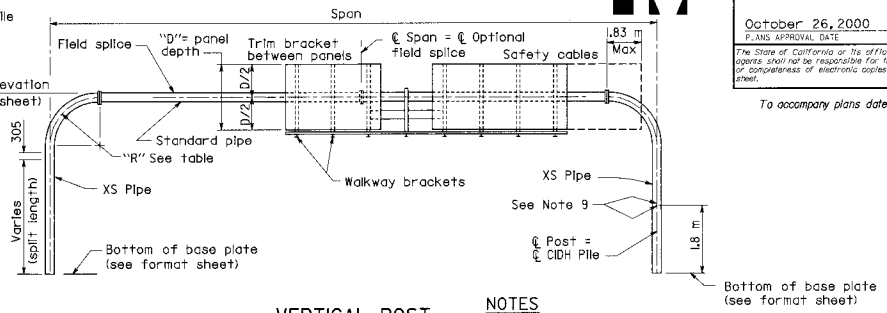

VERTICAL POST

* Mast arm diameter same as post.

◯ indicates camber type, see table.

SLANTED POSTS TABLE
(See Note 2)

PIPE POST DATA "R" (m)	*Dia (NPS)	Split (mm)	"D" (mm) →	1778	2032	2286	2540	2794	3048
2.44	8	127	Span (m)	(A) 15.2-17.4	(A) 15.2-17.4				
2.44	10	102 152		(A) 17.5-20.4	(A) 17.5-20.4	(A) 15.2-20.4	(A) 15.2-20.4	(A) 15.2-18.3	(A) 15.2-17.4
2.44	12	102 204		(B) 20.5-23.5	(B) 20.5-23.5	(B) 20.5-23.5	(B) 20.5-23.5	(B) 18.4-21.9	(A) 17.5-21.3
2.44	14	102 204		(B) 23.6-27.1	(B) 23.6-27.1	(C) 23.6-27.1	(C) 23.6-26.5	(B) 22.0-25.9	(B) 21.4-25.3
2.44	16	102 204		(B) 27.2-30.5	(B) 27.2-30.5	(C) 27.2-30.5	(C) 26.6-30.5	(C) 26.0-28.3	(C) 25.4-28.3
3.05	18	127 204		(B) 30.6-33.5	(B) 30.6-33.5	(C) 30.6-33.5	(C) 30.6-33.5	(C) 28.4-32.6	(C) 28.4-32.0
3.05	20	0 127		(B) 33.6-36.6	(C) 33.6-36.6	(C) 33.6-36.6	(D) 33.6-36.6	(D) 32.7-35.1	(C) 32.1-33.5
3.66	24	0 127		(C) 36.7-42.7	(C) 36.7-42.7	(D) 36.7-42.7	(D) 36.7-42.7	(D) 35.2-42.7	(D) 33.6-35.1 (D) 35.2-41.1 ①

① May increase to 44.2 m with total panel coverage limited to 22.9 m camber type (E)

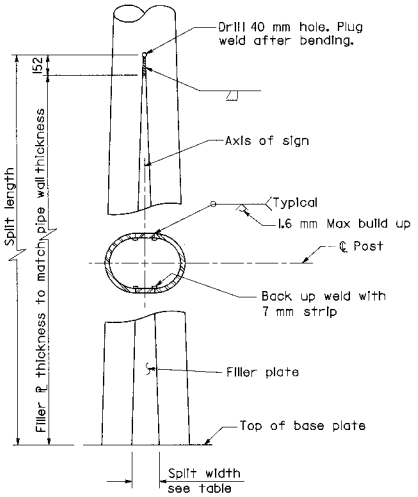

POST SPLIT DETAILS

CAMBER

Type	"x"	"y"
(A)	38	51
(B)	57	76
(C)	70	102
(D)	89	127
(E)	114	152

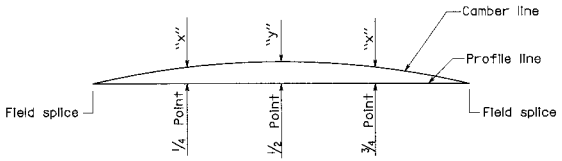

CAMBER DIAGRAM

NOTES

1. The maximum sign panel overlap onto elbow shall not exceed 1.83 m from the field splice.
2. For vertical post type, add 2.44 m to the vertical post span and enter the table for slanted post type. This adjusted span (vertical span +2.44 m) shall not exceed the maximum span shown in the table.
3. When several sign panels are to be installed with spaces between the panels the total sign panel length is the sum of the individual sign panel lengths only.
4. Maximum total sign panel coverage = 70% of slanted post span, 80% of vertical post span for spans up to 33.5 m above 33.5 m, varies on a straight line to 60% of vertical post span at 42.7 m.
5. All posts between base plate and field splice are extra strong pipe. All mast arms are standard pipe.
6. Before any portion of the sign frames are assembled in their final positions the Contractor shall demonstrate to the Engineer by preassembly or other approved methods that the span lengths of the frames in the no load condition match within 13 m ± the field measured span lengths between foundations.
7. If the sign frames are erected as one unit, they shall be adequately suspended to avoid distortions or changes in span length between base plates.
8. At final position of post, all top and bottom anchor bolt nuts shall be wrench tightened against base plate.
9. Drill and tap for 1/2 NPS chase nipples and plug with recessed pipe plugs. Place perpendicular to sign panel axis and away from approaching traffic. See Standard Plan ES-15C.
10. Maximum difference between post heights on an individual frame = 1.5 m.
11. For standard pipe members (Mast Arms) with lengths greater than 24 m an optional field splice will be permitted at ℄ of span to facilitate hauling operations.
12. NPS = Nominal Pipe Size.

STATE OF CALIFORNIA
DEPARTMENT OF TRANSPORTATION

OVERHEAD SIGNS-TUBULAR TWO POST TYPE LAYOUT AND PIPE SELECTION

NO SCALE

ALL DIMENSIONS ARE IN MILLIMETERS UNLESS OTHERWISE SHOWN

RSP S40Q DATED OCTOBER 26, 2000 SUPERSEDES STANDARD PLAN S40Q DATED JULY 1, 1999-PAGE 258 OF THE STANDARD PLANS BOOK DATED JULY 1999.

REVISED STANDARD PLAN RSP S40Q

1999 REVISED STD. PLAN RSP S40Q

DIST	COUNTY	ROUTE	KILOMETER POST TOTAL PROJECT	SHEET NO.	TOTAL SHEETS

REGISTERED CIVIL ENGINEER

October 26, 2000
PLANS APPROVAL DATE

REGISTERED PROFESSIONAL ENGINEER Jeffrey B. Woody NO. C41260 EXP. 3-31-03 CIVIL STATE OF CALIFORNIA

The State of California or its officers or agents shall not be responsible for the accuracy or completeness of electronic copies of this plan sheet.

To accompany plans dated _____

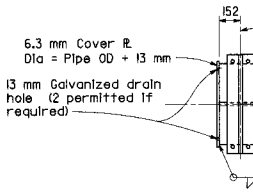

MAST ARM END DETAIL
(For "Single Post Type" only)

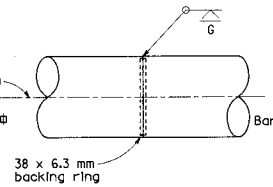

SHOP SPLICE

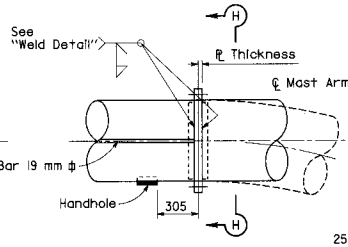

FIELD SPLICE

ATSM A-325M H.S. bolts (galvanized) equally spaced (Direct Tension Indicator Method)
Torque to tension of: 91 kN for M16x2
142 kN for M20x2.5
176 kN for M22x2.5
See table for other details

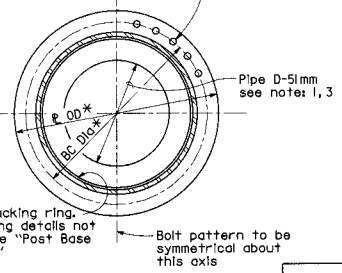

SECTION H-H

FIELD SPLICE				
Pipe Diameter NPS	PL Thickness mm	HS Bolts	* BC Diameter mm	* PL OD mm
8	29	13-M16X2	285	350
10	32	20-M16X2	340	405
12	32	17-M20X2.5	390	455
14	32	19-M20X2.5	420	485
16	32	22-M20X2.5	470	535
18	35	26-M20X2.5	520	585
20	35	29-M20X2.5	570	635
24	38	26-M22X2.5	690	780

* See note 4

NOTE
Design based on capacity of standard pipe.

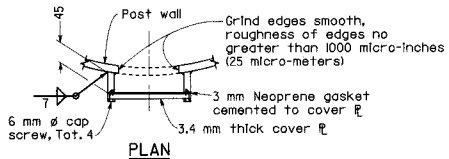

PLAN

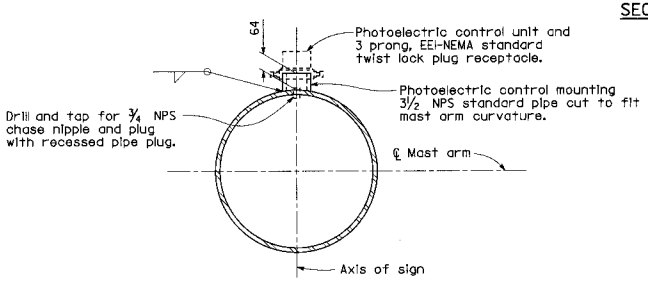

PHOTOELECTRIC CONTROL DETAILS
(See "Layout" sheet for location when required)

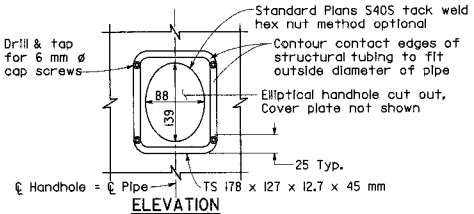

ELEVATION

TYPICAL DETAILS OF HANDHOLE AND COVER

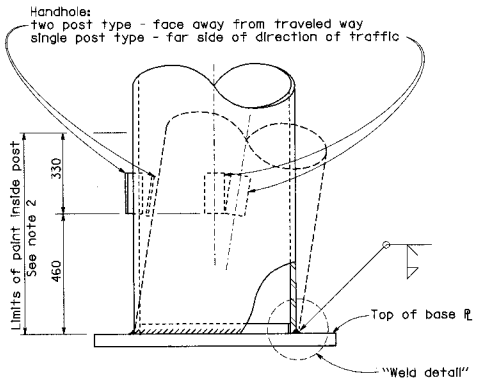

POST BASE ELEVATION
(For base PL details see "Basic Plate and Anchorage Detail" sheet)

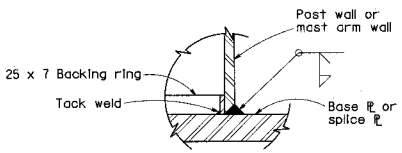

WELD DETAIL

NOTES
1. Place single thin bead of silicone caulking compound around hole prior to bolting. Caulking not to interfere with friction between plates in bolted area.
2. Prime and paint post interior from base PL to 152 mm above lower handhole-unless post is galvanized.
3. "D" is inside diameters of "extra strong pipe".
4. Field splice diameters marked "*" may be increased 51mm to facilitate bolting.

NPS = Nominal Pipe Size

STATE OF CALIFORNIA
DEPARTMENT OF TRANSPORTATION

OVERHEAD SIGNS-TUBULAR STRUCTURAL FRAME DETAILS NO.2

NO SCALE

ALL DIMENSIONS ARE IN MILLIMETERS UNLESS OTHERWISE SHOWN

RSP S405 DATED OCTOBER 26, 2000 SUPERSEDES STANDARD PLAN S405 DATED JULY 1, 1999-PAGE 260 OF THE STANDARD PLANS BOOK DATED JULY 1999.

REVISED STANDARD PLAN RSP S405

1999 REVISED STD. PLAN RSP S405

Post Type	Nominal Pipe Size (NPS) See Note 6	Split mm	Base PL Size mm	Bolt Circle mm	Anchor Bolts Dia (mm)
A	8 x-s	127	690 x 64	584	6-57
B	10 x-s	102	690 x 64	584	6-57
C	10 x-s	152	760 x 64	635	8-57
D	12 x-s	-	660 x 64	559	8-57
E	12 x-s	102	760 x 64	635	8-57
F	12 x-s	204	810 x 70	686	8-57
G	14 x-s	-	690 x 64	584	8-57
H	14 x-s	102	810 x 70	686	8-57
J	14 x-s	204	910 Dia x 70	737	10-57
K	16 x-s	-	760 x 64	635	8-57
L	16 x-s	102	910 Dia x 70	737	10-57
M	16 x-s	204	1020 Dia x 76	838	12-64
N	18 x-s	-	810 x 70	686	8-57
O	18 x-s	127	1020 Dia x 76	838	12-64
P	18 x-s	204	1020 Dia x 76	838	12-64
R	20 x-s	-	910 Dia x 70	737	10-57
S	20 x-s	127	1020 Dia x 76	838	12-64
T	24 x-s	-	1020 Dia x 76	838	12-64
V	24 x-s	127	1070 Dia x 64	908	14-64

To accompany plans dated _____

Caltrans Metric

DIST	COUNTY	ROUTE	KILOMETER POST TOTAL PROJECT	SHEET NO.	TOTAL SHEETS

REGISTERED CIVIL ENGINEER

October 26, 2000
PLANS APPROVAL DATE

REGISTERED PROFESSIONAL ENGINEER Jeffrey B. Woody No. C41260 Exp. 3-31-03 CIVIL STATE OF CALIFORNIA

The State of California or its officers or agents shall not be responsible for the accuracy or completeness of electronic copies of this plan sheet.

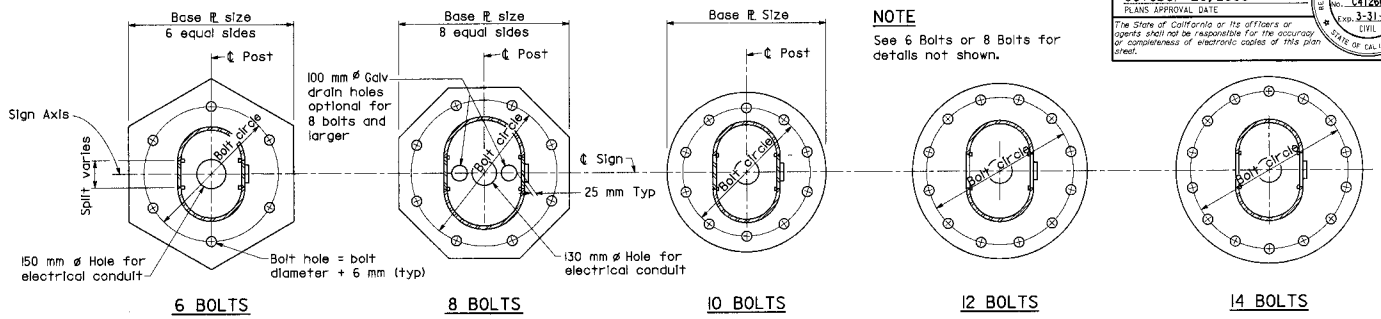

NOTE

See 6 Bolts or 8 Bolts for details not shown.

TWO POST TYPE BASE PLATE DETAILS

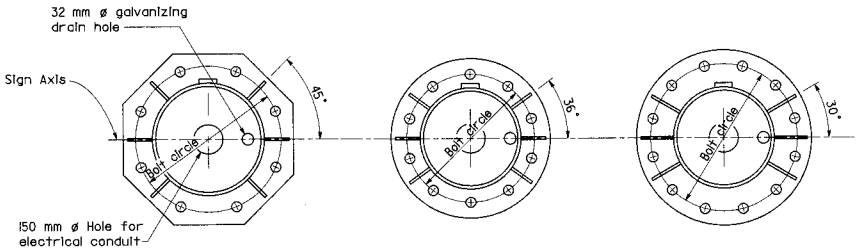

SINGLE POST TYPE BASE PLATE DETAILS

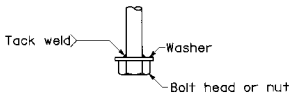

ANCHORAGE DETAIL

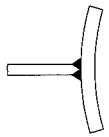

SECTION A-A

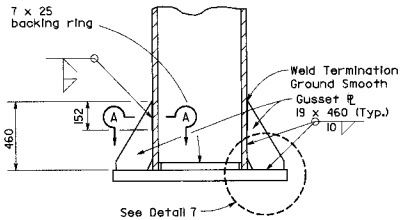

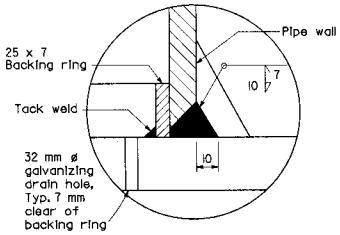

THRU POST @ BASE PL (NO COVER PL)
DETAIL 7

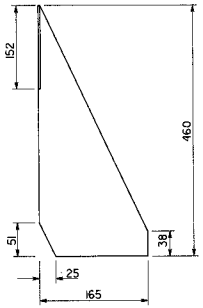

GUSSET DETAIL

STATE OF CALIFORNIA
DEPARTMENT OF TRANSPORTATION

OVERHEAD SIGNS-TUBULAR BASE PLATE AND ANCHORAGE DETAILS

NO SCALE

ALL DIMENSIONS ARE IN MILLIMETERS UNLESS OTHERWISE SHOWN

RSP S40T DATED OCTOBER 26, 2000 SUPERSEDES STANDARD PLAN S40T DATED JULY 1, 1999-PAGE 261 OF THE STANDARD PLANS BOOK DATED JULY 1999.

REVISED STANDARD PLAN RSP S40T

1999 REVISED STD. PLAN RSP S40T

DIST	COUNTY	ROUTE	KILOMETER POST TOTAL PROJECT	SHEET NO.	TOTAL SHEETS

REGISTERED CIVIL ENGINEER

October 26, 2000
PLANS APPROVAL DATE

REGISTERED PROFESSIONAL ENGINEER Jeffrey B. Woody No. C41260 Exp. 3-31-03 CIVIL STATE OF CALIFORNIA

The State of California or its officers or agents shall not be responsible for the accuracy or completeness of electronic copies of this plan sheet.

To accompany plans dated _____

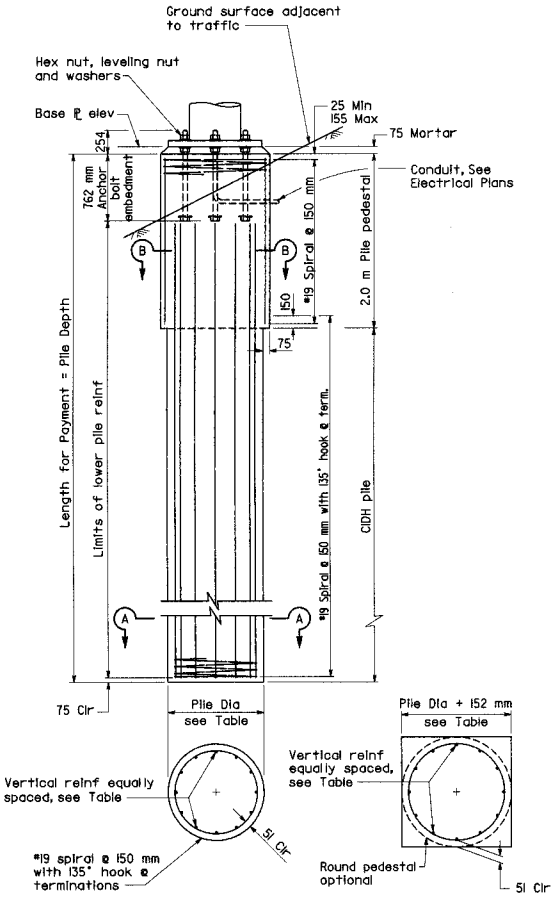

SECTION A-A SECTION B-B

PEDESTAL / CIDH PILE FOUNDATION DETAILS

(CIDH denotes cast-in-drilled-hole)

NOTES

1. Thread upper 250 mm and galvanize upper 300 mm of the anchor bolts.
2. Pile shall be placed against undisturbed material.
3. Provide bolt template during installation of anchor bolts.
4. Prior to erection of the post, backfill which is equivalent to the surrounding material shall be in place.
5. Pile shall be formed 150 mm minimum below ground surface.
6. Pipe sizes are based on ASTM A53 or A106. NPS = Nominal Pipe Size.

Post Type	Anchor Bolts Dia (mm)	Pile Dia (mm)	Vertical Reinf	Pile Depth (m)
A	6-57	920P	8-#29	3.4
B	6-57	920P	8-#29	3.7
C	8-57	920P	11-#29	4.3
D	8-57	920P	8-#29	3.7
E	8-57	920P	11-#29	4.0
F	8-57	920P	12-#29	4.0
G	8-57	920P	8-#29	4.0
H	8-57	920P	12-#29	4.3
J	10-57	920P	15-#29	5.2
K	8-57	920P	11-#29	4.3
L	10-57	920P	15-#29	4.6
M	12-64	1070P	18-#29	6.7
N	8-57	920P	12-#29	5.2
O	12-64	1070P	18-#29	5.8
P	12-64	1070P	18-#29	6.7
R	10-57	920P	15-#29	5.8
S	12-64	1070P	18-#29	6.7
T	12-64	1070P	18-#29	6.7
V	14-64	1070P	26-#29	6.7

NOTE: 'P' denotes pedestal

STATE OF CALIFORNIA
DEPARTMENT OF TRANSPORTATION

OVERHEAD SIGNS-TUBULAR FOUNDATION DETAILS

NO SCALE

ALL DIMENSIONS ARE IN MILLIMETERS UNLESS OTHERWISE SHOWN

RSP S40U DATED OCTOBER 26, 2000 SUPERSEDES STANDARD PLAN S40U DATED JULY 1, 1999-PAGE 262 OF THE STANDARD PLANS BOOK DATED JULY 1999.

REVISED STANDARD PLAN RSP S40U

1999 REVISED STD. PLAN RSP S40U

DIST	COUNTY	ROUTE	KILOMETER POST TOTAL PROJECT	SHEET NO.	TOTAL SHEETS

REGISTERED CIVIL ENGINEER

October 26, 2000
PLANS APPROVAL DATE

The State of California or its officers or agents shall not be responsible for the accuracy or completeness of electronic copies of this plan sheet.

REGISTERED PROFESSIONAL ENGINEER Jeffrey B. Woody No. C41260 Exp. 3-31-03 CIVIL STATE OF CALIFORNIA

To accompany plans dated _____

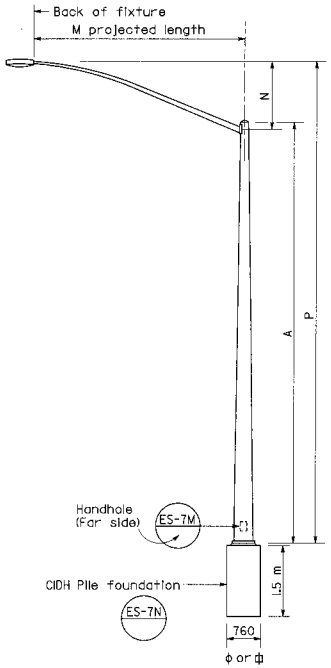

ELEVATION
TYPE 15
TYPE 22

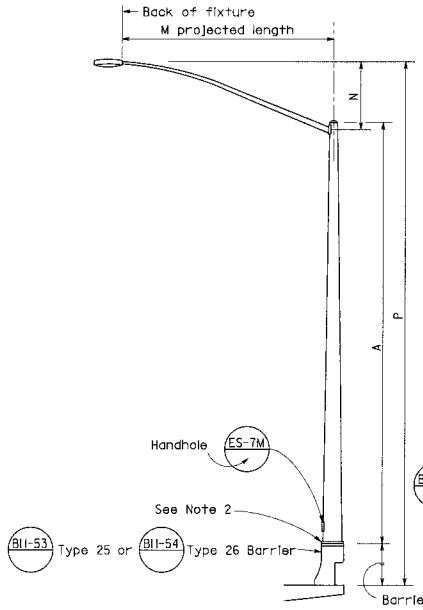

ELEVATION
TYPE 15 BARRIER RAIL MOUNTED
TYPE 21 BARRIER RAIL MOUNTED

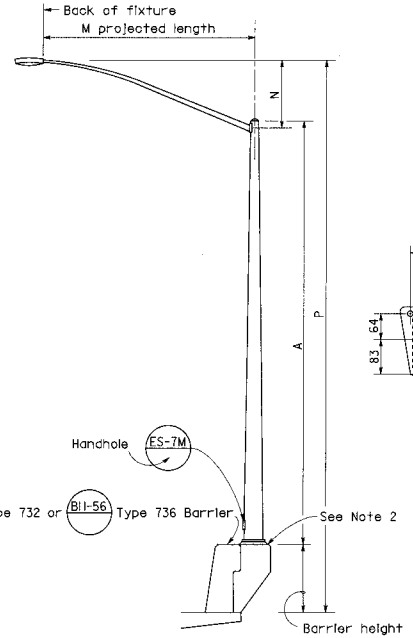

ELEVATION
TYPE 15 BARRIER RAIL MOUNTED
TYPE 21 BARRIER RAIL MOUNTED

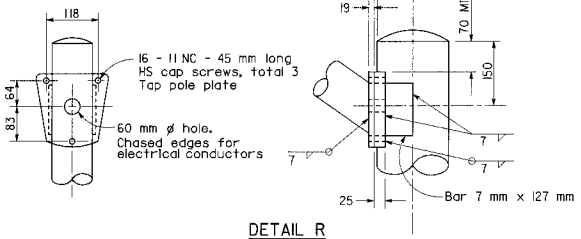

DETAIL R
LUMINAIRE ARM CONNECTION

HIGH STRENGTH CAP SCREWS
16 - 11NC - 45
Length (mm)
Threads (per inch)
Size (mm)

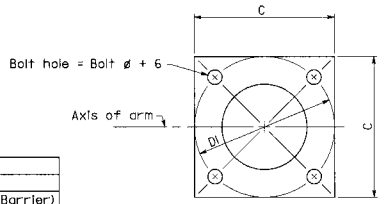

BASE PLATE

POLE TYPE	POLE DATA				BASE PLATE DATA				LUMINAIRE ARM
	A Height	MIN OD Base	MIN OD Top	Wall Thickness	C	DI Bolt Circle	Thickness	Anchor Bolts Size	
	m	mm	mm	mm	mm				m
15	9.1	203	98	3.04	305	280	25	25 ø x 920 x 102*	1.8-4.6 ☐ 3.7
21	10.7	219	98	3.04	305	305	25	32 ø see Note 2	1.8-4.6 ☐ 3.7
22	10.7	219	98	3.04	305	305	25	32 ø x 920 x 102	1.8-4.6 ☐ 3.7

LUMINAIRE ARM DATA							
M Projected Length	N Rise	Min OD At Pole	Nominal Thickness	P Mounting Height			
				Type 15	Type 22	Type 15 (810 mm Barrier)	Type 21 (810 mm Barrier)
m	mm	mm	mm	m	m	m	m
1.8	610 ±	83	3.04	9.6 ±	11.1 ±	10.4 ±	11.9 ±
2.4	760 ±	89	3.04	9.8 ±	11.3 ±	10.5 ±	12.1 ±
3.1	990 ±	98	3.04	10.0 ±	11.5 ±	10.7 ±	12.3 ±
3.7	1290 ±	98	3.04	10.3 ±	11.8 ±	11.0 ±	12.6 ±
4.6	1450 ±	108	3.04	10.4 ±	12.0 ±	11.2 ±	12.8 ±

NOTES

1. ☐ indicates arm length to be used unless otherwise noted on the plans.
2. For anchorage details see ES-6B.
3. See ES-6B when Type 15 is to be mounted on bridge railing.
4. For Type 15-SB, use Type 15 standard with Type 30 base plate details, see Standard Plan ES-6F.
5. For additional notes see Standard Plan ES-7M and ES-7N.
6. For Type 15-SBI, see Standard Plan ES-6C.

* For barrier rail mount, see Note 2.

STATE OF CALIFORNIA
DEPARTMENT OF TRANSPORTATION

LIGHTING STANDARDS TYPES 15, 21 AND 22

NO SCALE

ALL DIMENSIONS ARE IN MILLIMETERS UNLESS OTHERWISE SHOWN

RSP ES-6A DATED OCTOBER 26, 2000 SUPERSEDES STANDARD PLAN ES-6A DATED JULY 1, 1999-PAGE 289 OF THE STANDARD PLANS BOOK DATED JULY 1999.

REVISED STANDARD PLAN RSP ES-6A

DIST	COUNTY	ROUTE	KILOMETER POST TOTAL PROJECT	SHEET NO.	TOTAL SHEETS

REGISTERED CIVIL ENGINEER

October 26, 2000
PLANS APPROVAL DATE

REGISTERED PROFESSIONAL ENGINEER Jeffrey B. Woody No. C41260 Exp. 3-31-03 CIVIL STATE OF CALIFORNIA

The State of California or its officers or agents shall not be responsible for the accuracy or completeness of electronic copies of this plan sheet.

To accompany plans dated _____

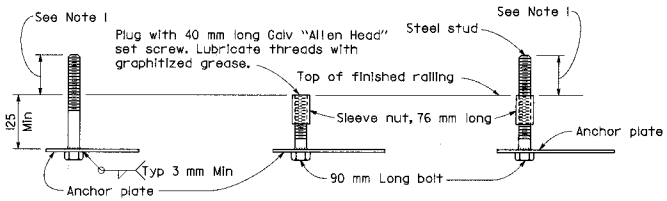

FOR IMMEDIATE INSTALLATION | FOR FUTURE INSTALLATION | FOR INSTALLATION ON FUTURE TYPE ANCHOR BOLTS

DETAIL B
ELECTROLIER ANCHOR BOLTS

NOTES

1. Anchor bolt or stud length shall be such that thread extends 13 mm maximum above nut on level base plate after grouting. See Detail "N".
2. Electrolier anchor bolts shall be held in position for pouring by means of anchor plates and suitable templates. Deviation from the true position, vertical and height, shall not exceed 1.5 mm.
3. See railing sheets for reinforcement and structural details at electroliers and pull boxes.

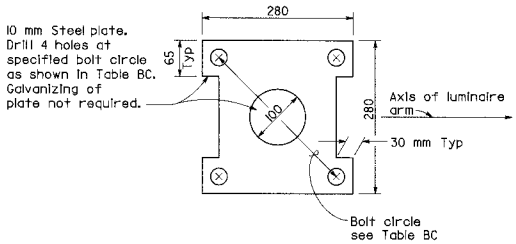

TABLE BC

Type	Bolt Circle	Anchor Bolt Diameter
15	280 mm	25 mm
21	305 mm	32 mm

ANCHOR PLATE

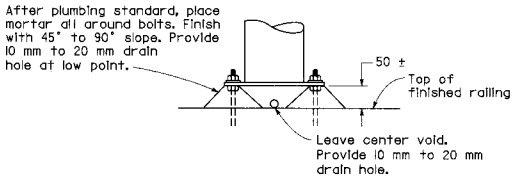

DETAIL N
GROUTING AT ELECTROLIER

STATE OF CALIFORNIA
DEPARTMENT OF TRANSPORTATION

LIGHTING STANDARDS TYPES 15 AND 21 BARRIER RAIL MOUNTED DETAILS

NO SCALE

ALL DIMENSIONS ARE IN MILLIMETERS UNLESS OTHERWISE SHOWN

RSP ES-6B DATED OCTOBER 26, 2000 SUPERSEDES STANDARD PLAN ES-6B DATED JULY 1, 1999-PAGE 290 OF THE STANDARD PLANS BOOK DATED JULY 1999.

REVISED STANDARD PLAN RSP ES-6B

1999 STD. PLAN RSP ES-6B

DIST	COUNTY	ROUTE	KILOMETER POST TOTAL PROJECT	SHEET NO.	TOTAL SHEETS

Caltrans Metric

REGISTERED CIVIL ENGINEER

October 26, 2000
PLANS APPROVAL DATE

REGISTERED PROFESSIONAL ENGINEER Jeffrey B. Woody No. C41260 Exp. 3-31-03 CIVIL STATE OF CALIFORNIA

The State of California or its officers or agents shall not be responsible for the accuracy or completeness of electronic copies of this plan sheet.

To accompany plans dated _____

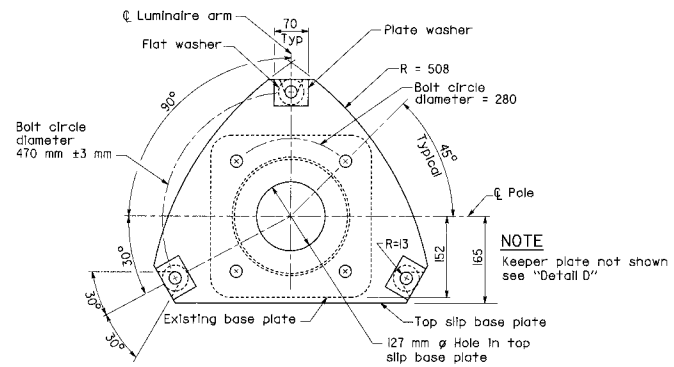

PLAN - TOP PLATES

NOTE
Keeper plate not shown see "Detail D"

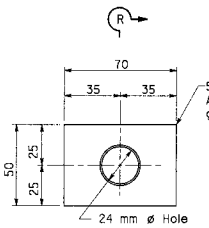

PLATE WASHER

NOTE
For details not shown see "Anchor Base Plate Details" and "Plan-Bottom Plates".

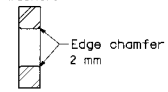

SECTION R-R

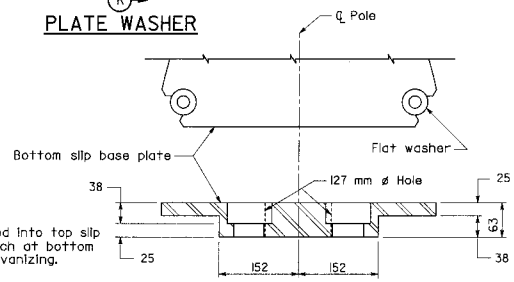

SECTION C-C
CAST OPTION

NOTES

1. Conduit riser (including bushing) shall protrude no more than 50 mm above top of foundation.
2. When existing anchor bolts are 22 mm ø, provide 2 hardened washers of 57 mm ø at each slot hole. Place on each side of anchor base plate.
3. Nuts on 22 mm ø HS clamping bolts shall be lubricated and torqued as per specifications.
4. Torque requirements for nuts attaching anchor base plate to existing anchor bolts are waived. Wrench tighten.

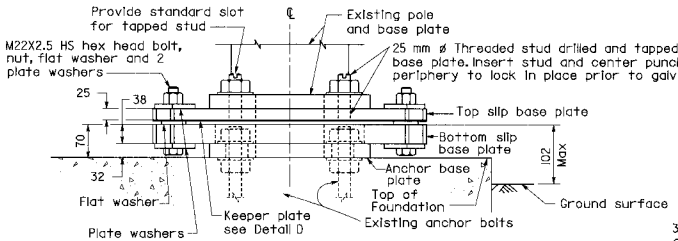

ELEVATION

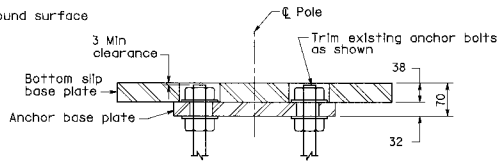

SECTION C-C
WELDED OPTION

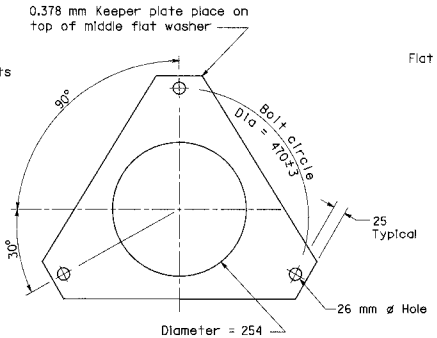

DETAIL D

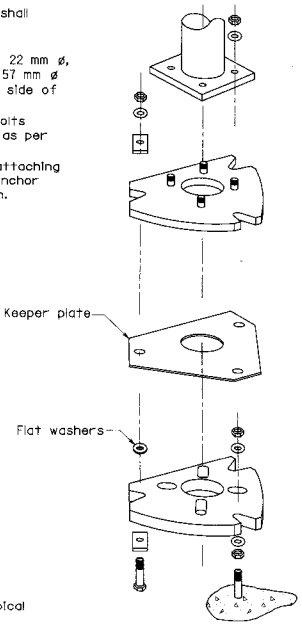

SLIP BASE INSERT DETAIL

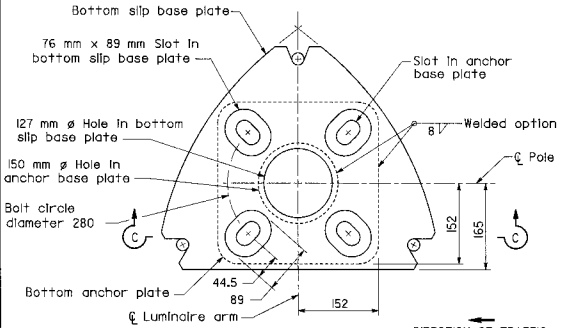

PLAN - BOTTOM PLATE
SLIP BASE PLATE INSERT DETAILS

NOTE
For plate dimensions see "Plan-Top Plates".

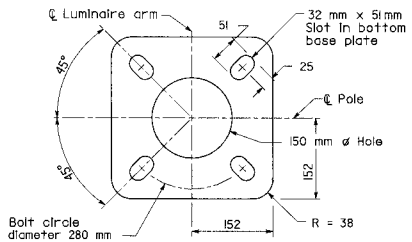

PLAN
ANCHOR BASE PLATE DETAILS

STATE OF CALIFORNIA
DEPARTMENT OF TRANSPORTATION

LIGHTING STANDARDS
TYPE 15
SLIP BASE INSERT

NO SCALE

ALL DIMENSIONS ARE IN MILLIMETERS UNLESS OTHERWISE SHOWN

RSP ES-6C DATED OCTOBER 26, 2000 SUPERSEDES STANDARD PLAN ES-6C DATED JULY 1, 1999-PAGE 291 OF THE STANDARD PLANS BOOK DATED JULY 1999.

REVISED STANDARD PLAN RSP ES-6C

DIST	COUNTY	ROUTE	KILOMETER POST TOTAL PROJECT	SHEET NO.	TOTAL SHEETS

Caltrans Metric

REGISTERED CIVIL ENGINEER

October 26, 2000
PLANS APPROVAL DATE

REGISTERED PROFESSIONAL ENGINEER Jeffrey B. Woody No. C41260 Exp. 3-31-03 CIVIL STATE OF CALIFORNIA

The State of California or its officers or agents shall not be responsible for the accuracy or completeness of electronic copies of this plan sheet.

To accompany plans dated _____

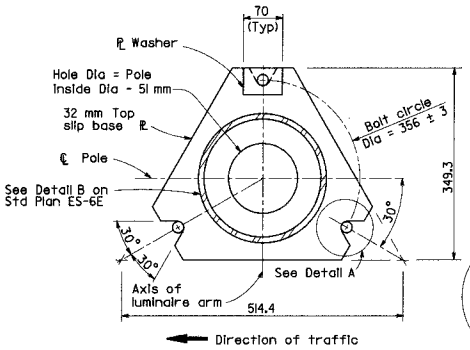

BASE PLATE

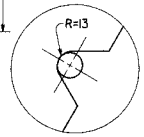

DETAIL A

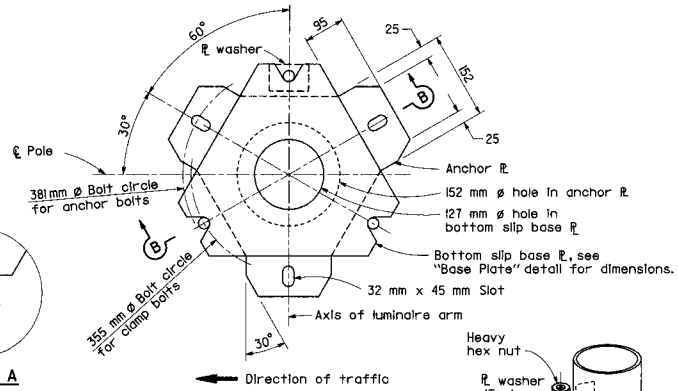

BOTTOM PLATES

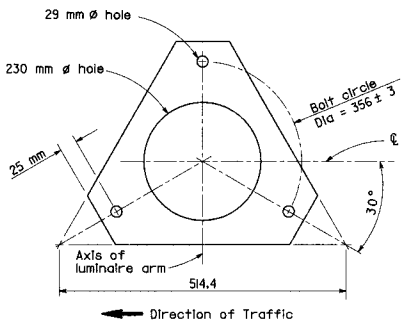

KEEPER PLATE

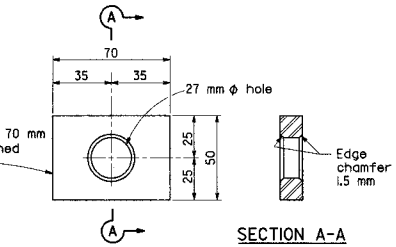

PLATE WASHER

SECTION A-A

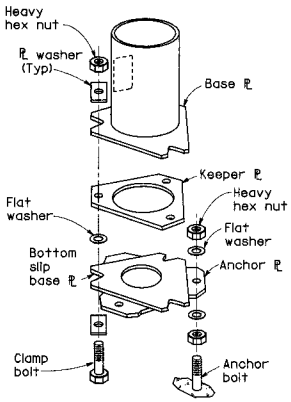

SLIP BASE DETAIL

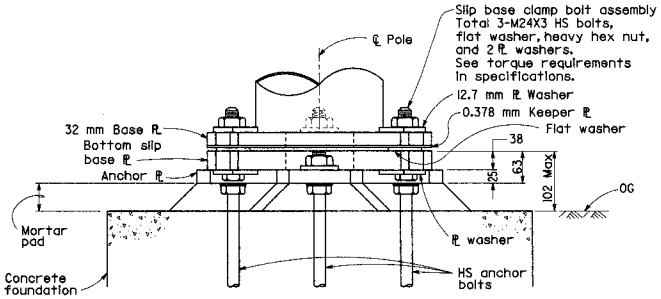

ELEVATION - SLIP BASE

ELEVATION

NOTES

1. M24X3 HS anchor bolts, wrench tighten, torque requirements waived. For clamp bolts, see specifications.
2. Conduit shall not protrude more than 50 mm above top of foundation.
3. Locate handhole on downstream side of traffic.
4. For Type 30 fixed base, use Type 22 foundation and base plate details. For Type 31 fixed base, use Type 32 foundation and base plate details.

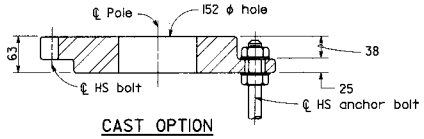

CAST OPTION

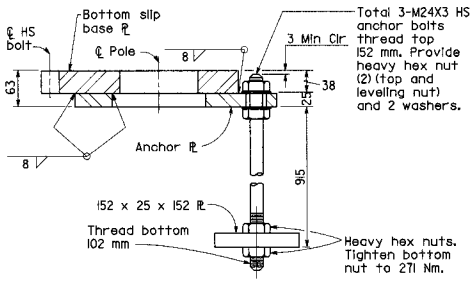

WELDED OPTION

SECTION B-B

STATE OF CALIFORNIA
DEPARTMENT OF TRANSPORTATION

LIGHTING STANDARDS TYPES 30 AND 31 BASE PLATE DETAILS

NO SCALE

ALL DIMENSIONS ARE IN MILLIMETERS UNLESS OTHERWISE SHOWN

RSP ES-6F DATED OCTOBER 26, 2000 SUPERSEDES STANDARD PLAN ES-6F DATED JULY 1, 1999-PAGE 294 OF THE STANDARD PLANS BOOK DATED JULY 1999.

REVISED STANDARD PLAN RSP ES-6F

1999 REVISED STD. PLAN RSP ES-6F

Post Type	Pole Data (mm)			Base Plate Data (mm)					CIDH Pile Data		
	Height "H" (m)	Min OD Base	Min Thickness Base	Dia	Thickness	Anchor Bolts			"D" (mm)	"L" (m)	Pile Reinf
						Total	Size "d"	BC			
HM 80	24.4	457	4.8	775	51	4	51	635	1070	3.0	10-#25
HM 100	30.5	495	4.8	775	51	6	51	635	1070	3.3	13-#25
HM 120	36.6	565	6.4	953	51	6	51	812	1220	3.6	20-#25
HM 160	48.8	673	6.4	1092	64	6	64	914	1370	4.5	25-#25

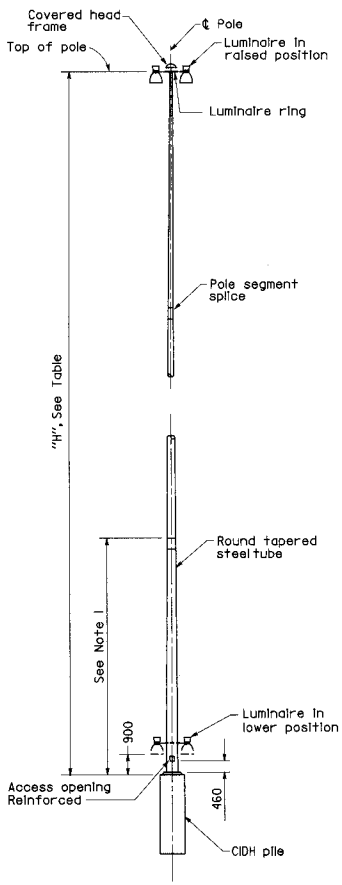

POLE DETAILS

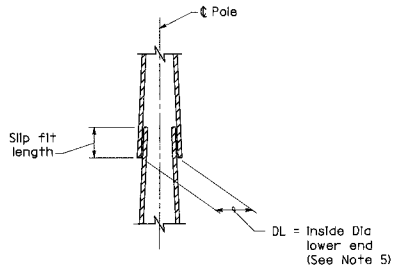

POLE SEGMENT SPLICE DETAIL

See Note 5

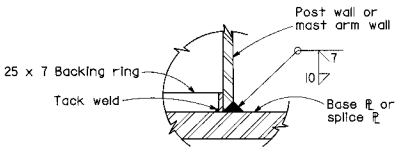

WELD DETAIL

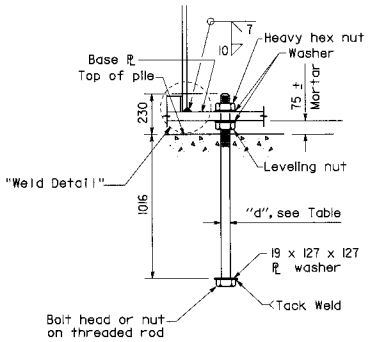

ANCHOR BOLT DETAIL

To accompany plans dated _____

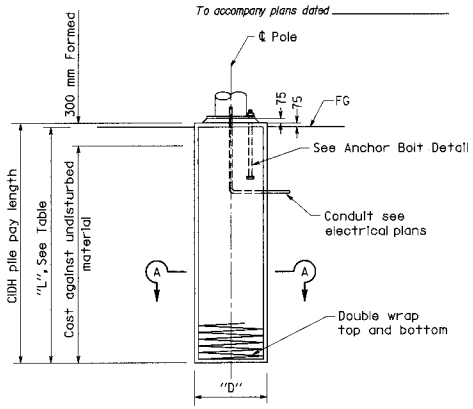

TYPICAL ELEVATION

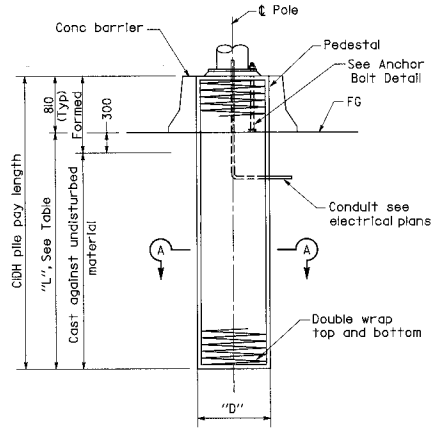

MEDIAN LOCATION

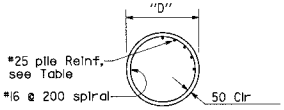

SECTION A-A

CIDH PILE DETAILS

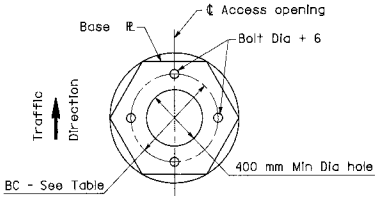

4 BOLTS

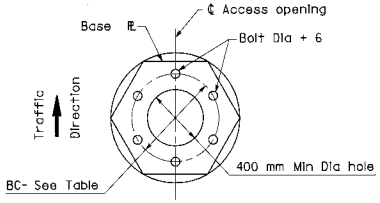

6 BOLTS

BASE PLATE DETAILS

See Note 6

NOTES

1. Pole details shall suit the lowering device and this foundation plan. Pole details shall be submitted to the Engineer for approval.
2. Pole finish shall be galvanized.
3. For number of luminaires to be mounted on the pole, see Electrical Plans.
4. Foundation design is based on a maximum of 10 luminaires. Design wind velocity 129 km/h.
5. Slip fit length shall not be less than 1.5 DL minus 50 mm.
6. Base plate shape optional.

STATE OF CALIFORNIA
DEPARTMENT OF TRANSPORTATION

LIGHTING STANDARDS 24.4 m TO 48.8 m HIGH MAST LIGHT POLE FOUNDATION DETAILS

NO SCALE

ALL DIMENSIONS ARE IN MILLIMETERS UNLESS OTHERWISE SHOWN

RSP ES-6J DATED OCTOBER 26, 2000 SUPERSEDES STANDARD PLAN ES-6J DATED JULY 1, 1999-PAGE 298 OF THE STANDARD PLANS BOOK DATED JULY 1999.

REVISED STANDARD PLAN RSP ES-6J

Caltrans Metric

DIST	COUNTY	ROUTE	KILOMETER POST TOTAL PROJECT	SHEET NO.	TOTAL SHEETS

REGISTERED CIVIL ENGINEER

October 26, 2000
PLANS APPROVAL DATE

The State of California or its officers or agents shall not be responsible for the accuracy or completeness of electronic copies of this plan sheet.

REGISTERED PROFESSIONAL ENGINEER Jeffrey B. Woody No. C41260 Exp. 3-31-03 CIVIL STATE OF CALIFORNIA

1999 STD. PLAN RSP ES-6J

DIST	COUNTY	ROUTE	KILOMETER POST TOTAL PROJECT	SHEET NO.	TOTAL SHEETS

REGISTERED CIVIL ENGINEER

October 26, 2000
PLANS APPROVAL DATE

REGISTERED PROFESSIONAL ENGINEER Jeffrey B. Woody No. C41260 Exp. 3-31-03 CIVIL STATE OF CALIFORNIA

The State of California or its officers or agents shall not be responsible for the accuracy or completeness of electronic copies of this plan sheet.

To accompany plans dated _____

Caltrans Metric

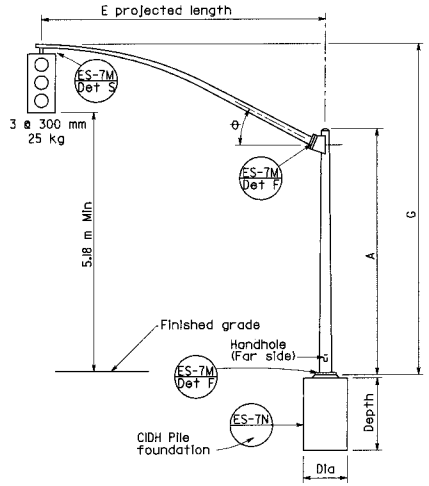

ELEVATION

TYPE 18-I-129

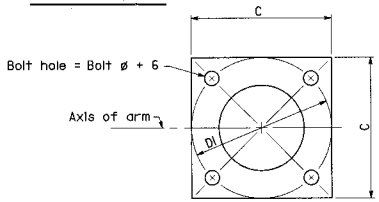

BASE PLATE

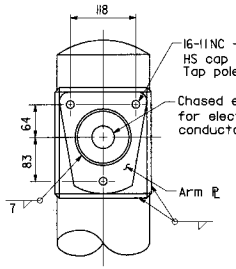

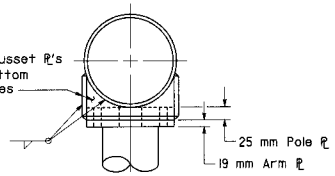

DETAIL W

LUMINAIRE ARM CONNECTION

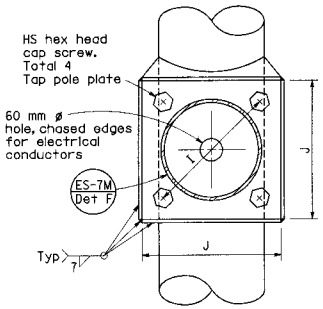

SECTION A-A

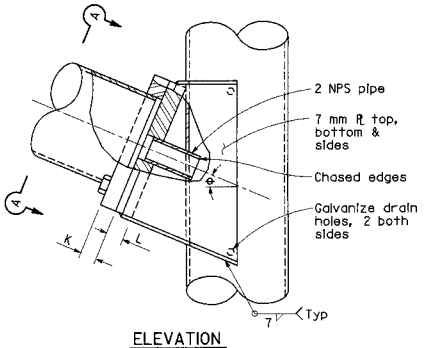

ELEVATION

SIGNAL ARM CONNECTION DETAILS

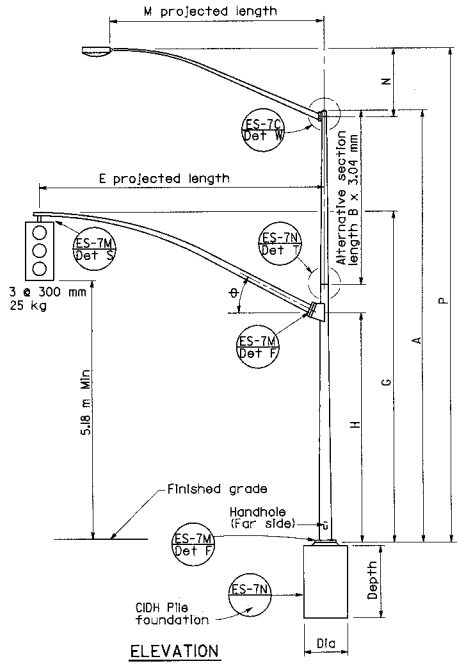

ELEVATION

TYPE 19-I-129, 19A-I-129

HIGH STRENGTH CAP SCREWS

16 - 11NC - 45

Length (mm)
Threads (per inch)
Size (mm)

SIGNAL ARM DATA										
E Projected Length	G Mounting Height	H	Min OD At Pole	Thickness	I Bolt Circle	HS Cap Screws	J Plate Size	K Arm ℄ Thickness	L Pole ℄ Thickness	θ
(m)			(mm)							
4.6	6.8 ±	4.9	178	3.04	305	32-7NC-76	305	32	38	23°
6.1	6.6 ±		181							
7.6	6.9 ±		186							
9.1	7.0 ±		203							

LUMINAIRE ARM DATA					
M Projected Length	N Rise	Min OD at Pole	Thickness	P Mounting Height 9.1 Pole	P Mounting Height 10.7 Pole
(m)	(mm)			(m)	
1.8	610 ±	83	3.04	9.6 ±	11.1 ±
2.4	760 ±	89		9.8 ±	11.3 ±
3.1	990 ±	98		10.0 ±	11.5 ±
3.7	1290 ±			10.3 ±	11.8 ±
4.6	1450 ±	108		10.5 ±	12.0 ±

Pole Type	Load Case	Wind Velocity km/h	POLE DATA: A Height	Min OD Base	Min OD Top	Thickness	Alternative Section B Length	Alternative Section Bottom	Alternative Section Top	BASE PLATE DATA: C	DI Bolt Circle	Thickness	Anchor Bolts Size	Luminaire Arm	Signal Arm	CIDH PILE FOUNDATION: Diameter	Depth	Reinforced
			(m)	(mm)			(m)	(mm)		(mm)				(m)		(mm)	(m)	
18-I-129	I	129	5.2	273	214	4.55	None	203	168	457	445	32	38 ø x 1067 x 152	None	7.6 or 9.1	760	2.2	Yes
19-I-129			9.1		168		3.0							1.8-4.6 [3.7]				
19A-I-129			10.7		151		4.6		151					1.8-4.6 [4.6]				

☐ Indicates arm length to be used unless otherwise noted on plans.

STATE OF CALIFORNIA
DEPARTMENT OF TRANSPORTATION

SIGNAL AND LIGHTING STANDARDS
CASE 1 ARM LOADING
WIND VELOCITY=129 km/h
ARM LENGTHS 4.6 m TO 9.1 m

NO SCALE

ALL DIMENSIONS ARE IN MILLIMETERS UNLESS OTHERWISE SHOWN

RSP ES-7C DATED OCTOBER 26, 2000 SUPERSEDES STANDARD PLAN ES-7C DATED JULY 1, 1999-PAGE 302 OF THE STANDARD PLANS BOOK DATED JULY 1999.

REVISED STANDARD PLAN RSP ES-7C

1999 STD. PLAN RSP ES-7C

DIST	COUNTY	ROUTE	KILOMETER POST TOTAL PROJECT	SHEET NO.	TOTAL SHEETS

Caltrans Metric

To accompany plans dated _____

REGISTERED CIVIL ENGINEER

October 26, 2000
PLANS APPROVAL DATE

The State of California or its officers or agents shall not be responsible for the accuracy or completeness of electronic copies of this plan sheet.

REGISTERED PROFESSIONAL ENGINEER Jeffrey B. Woody No. C41260 Exp. 3-31-03 CIVIL STATE OF CALIFORNIA

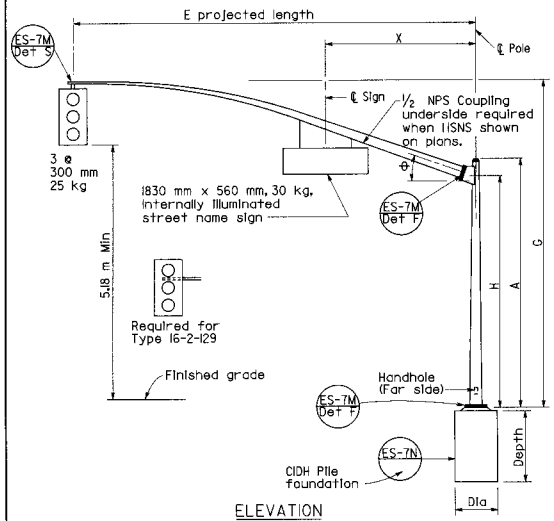

ELEVATION

TYPE 16-2-129, 18-2-129

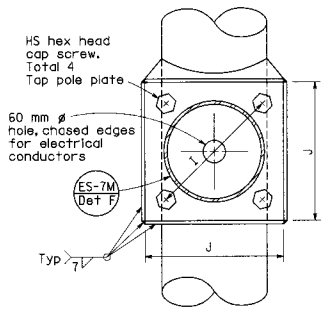

SECTION A-A

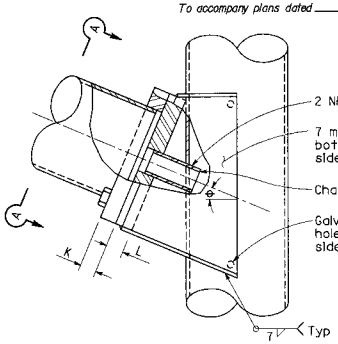

ELEVATION

SIGNAL ARM CONNECTION DETAILS

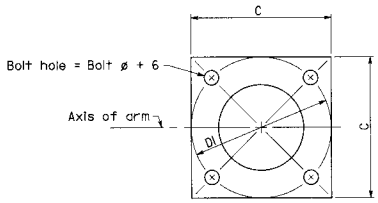

BASE PLATE

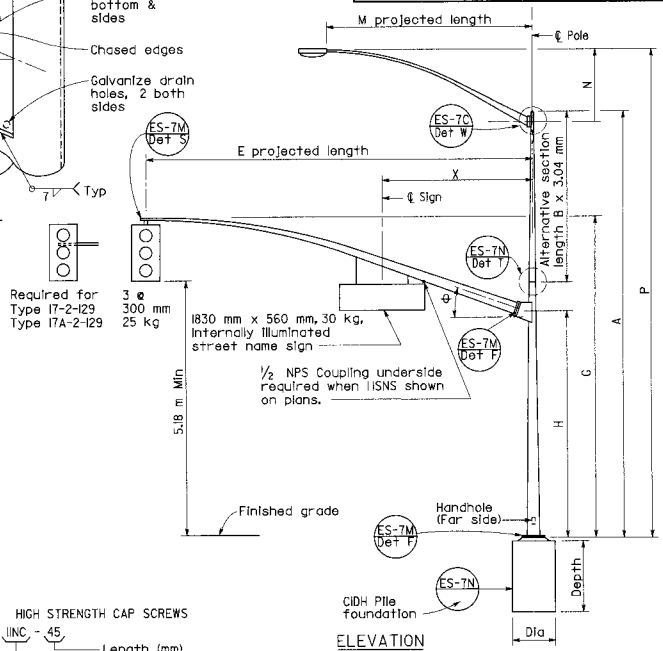

ELEVATION

TYPE 17-2-129, 19-2-129, 17A-2-129, 19A-2-129

HIGH STRENGTH CAP SCREWS
16 - IINC - 45
Length (mm)
Threads (per inch)
Size (mm)

SIGNAL ARM DATA											
E Projected Length	G Mounting Height	H	Min OD At Pole	Thickness	I Bolt Circle	HS Cap Screws	J Plate Size	K Arm ℞ Thickness	L Pole ℞ Thickness	⊖	X Max
(m)			(mm)								(m)
4.6	6.8 ±	4.9	168	4.55	305	32-7NC-76	305	32	38	23°	3.2
6.1	6.6 ±		168								
7.6	6.9 ±		186								
9.1	7.0 ±		203								

LUMINAIRE ARM DATA					
M Projected Length	N Rise	Min OD at Pole	Thickness	P Mounting Height 9.1 Pole	P Mounting Height 10.7 Pole
(m)	(mm)			(m)	
1.8	610 ±	83	3.04	9.6 ±	11.1 ±
2.4	760 ±	89		9.8 ±	11.3 ±
3.1	990 ±	98		10.0 ±	11.5 ±
3.7	1290 ±			10.3 ±	11.9 ±
4.6	1450 ±	108		10.5 ±	12.0 ±

POLE DATA									BASE PLATE DATA						CIDH PILE FOUNDATION		
Pole Type	Load Case	Wind Velocity km/h	A Height	Min OD Base	Min OD Top	Thickness	Alternative Section B Length	Alternative Section Bottom	Alternative Section Top	C	DI Bolt Circle	Thickness	Anchor Bolts Size	Luminaire Arm	Signal Arm	Diameter	Depth	Reinforced
			(m)	(mm)			(m)	(mm)		(mm)				(m)		(mm)	(m)	
16-2-129	2	129	5.2	273	214	4.55	None	203	168	457	445	38	51 ø x 1067 x 152	None	6.1	760	2.2	Yes
17-2-129			9.1		168		3.0							1.8-4.6 [3.7]				
17A-2-129			10.7		151		4.6		151					1.8-4.6 [4.6]				
18-2-129			5.2		214		None	238	168					None	7.6 or 9.1			
19-2-129			9.1		168		3.0							1.8-4.6 [3.7]				
19A-2-129			10.7		151	6.07	4.6		151					1.8-4.6 [4.6]				

☐ Indicates arm length to be used unless otherwise noted on plans.

STATE OF CALIFORNIA
DEPARTMENT OF TRANSPORTATION

SIGNAL AND LIGHTING STANDARDS
CASE 2 ARM LOADING
WIND VELOCITY=129 km/h
ARM LENGTHS 4.6 m TO 9.1 m

NO SCALE

ALL DIMENSIONS ARE IN MILLIMETERS UNLESS OTHERWISE SHOWN

RSP ES-7D DATED OCTOBER 26, 2000 SUPERSEDES STANDARD PLAN ES-7D DATED JULY 1, 1999-PAGE 303 OF THE STANDARD PLANS BOOK DATED JULY 1999.

REVISED STANDARD PLAN RSP ES-7D

1999 REVISED STD. PLAN RSP ES-7D

DIST	COUNTY	ROUTE	KILOMETER POST TOTAL PROJECT	SHEET NO.	TOTAL SHEETS

REGISTERED CIVIL ENGINEER

October 26, 2000
PLANS APPROVAL DATE

The State of California or its officers or agents shall not be responsible for the accuracy or completeness of electronic copies of this plan sheet.

REGISTERED PROFESSIONAL ENGINEER Jeffrey B. Woody No. C41260 Exp. 3-31-03 CIVIL STATE OF CALIFORNIA

To accompany plans dated _____

Caltrans Metric

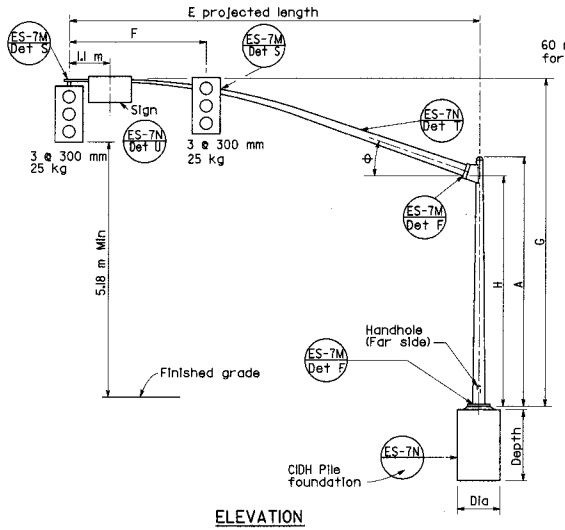

ELEVATION
TYPE 18-3-129, 23-3-129, 27-3-129

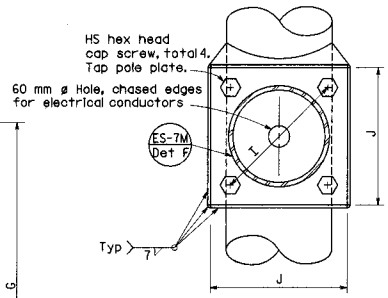

SECTION A-A

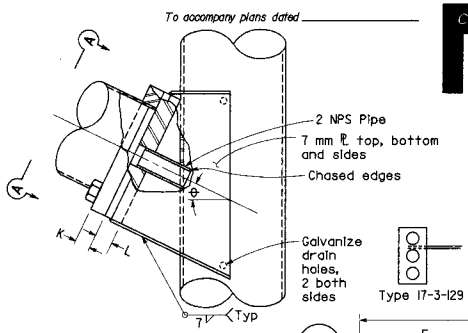

ELEVATION

SIGNAL ARM CONNECTION DETAILS

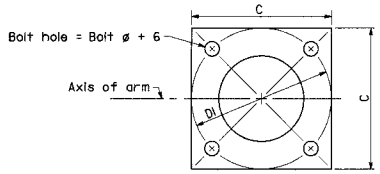

BASE PLATE

HIGH STRENGTH CAP SCREWS
16 - IINC - 45
Length (mm)
Threads (per inch)
Size (mm)

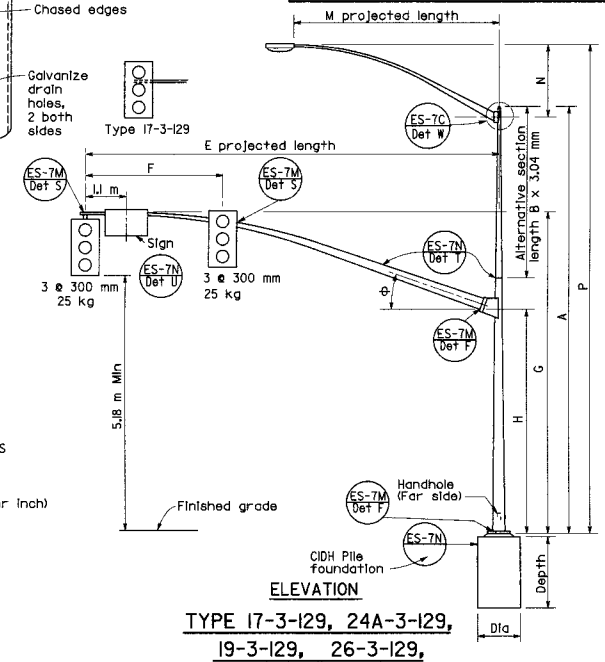

ELEVATION
TYPE 17-3-129, 24A-3-129, 19-3-129, 26-3-129, 19A-3-129, 26A-3-129, 24-3-129

Minimum yield of sheet steel is 331MPa

STATE OF CALIFORNIA
DEPARTMENT OF TRANSPORTATION

SIGNAL AND LIGHTING STANDARDS
CASE 3 ARM LOADING
WIND VELOCITY=129 km/h
ARM LENGTHS 4.6 m TO 13.7 m

NO SCALE

ALL DIMENSIONS ARE IN MILLIMETERS UNLESS OTHERWISE SHOWN

RSP ES-7E DATED OCTOBER 26, 2000 SUPERSEDES STANDARD PLAN ES-7E DATED JULY 1, 1999-PAGE 304 OF THE STANDARD PLANS BOOK DATED JULY 1999.

REVISED STANDARD PLAN RSP ES-7E

SIGNAL ARM DATA

E Projected Length	F Min Spacing	G Mounting Height	H	Min OD At Pole	Thickness	I Bolt Circle	HS Cap Screws	J Plate Size	K Arm ℞ Thickness	L Pole ℞ Thickness	θ
(m)				(mm)							
4.6	2.5	6.8 ±	4.9	168	4.55	305	32-7NC-76	305	32	38	23°
6.1		6.6 ±									
7.6	3.7	6.9 ±		186	6.07						
9.1				203							
10.7	4.3	7.0 ±		222				330	38	45	21°
12.2	4.6			238		330					15°
13.7		7.2 ±		256							

LUMINAIRE ARM DATA

M Projected Length	N Rise	Min OD at Pole	Thickness	P Mounting Height 9.1 Pole	P Mounting Height 10.7 Pole
(m)	(mm)			(m)	
1.8	610 ±	83	3.04	9.6 ±	11.1 ±
2.4	760 ±	89		9.8 ±	11.3 ±
3.1	990 ±	98		10.0 ±	11.5 ±
3.7	1290 ±			10.3 ±	11.8 ±
4.6	1450 ±	108		10.5 ±	12.0 ±

Pole Type	Load Case	Wind Velocity km/h	POLE DATA: A Height	Min OD Base	Min OD Top	Thickness	Alternative Section B Length	Alternative Section Bottom	Alternative Section Top	BASE PLATE DATA: C	DI Bolt Circle	Thickness	Anchor Bolts Size	Luminaire Arm	Signal Arm	CIDH PILE FOUNDATION: Diameter	Depth	Reinforced
			(m)	(mm)			(m)	(mm)		(mm)				(m)		(mm)	(m)	
17-3-129	3	129	9.1	273	168	4.55	3.1	203	203	457	445	38	51øx1067x152	1.8-4.6 [3.7]	6.1	914	2.7	Yes
18-3-129			5.2		214	6.07	None							None				
19-3-129			9.1		168		3.1	203	203					1.8-4.6 [3.7]	7.6 or [9.1]			
19A-3-129			10.7		151		4.6		151					1.8-4.6 [4.6]				
23-3-129			5.2	305	229		None	238						None	10.7			
24-3-129			9.1		203		3.1		184					1.8-4.6 [3.7]				
24A-3-129			10.7		186		4.6		168					1.8-4.6 [4.6]				
26-3-129			9.1	308	203	7.94	3.1		203					1.8-4.6 [3.7]	12.2 or [13.7]			
26A-3-129			10.7		186		4.6		186					1.8-4.6 [4.6]				
27-3-129			5.2		248		None							None				

☐ Indicates arm length to be used unless otherwise noted on plans.

Post Type	Pole Data				Base Plate Data (mm)				CIDH Pile Data		
	Height "h" (m)	Min OD		Min Thickness	Dia	Thickness	Anchor Bolts		Dia.	"d" (m)	Pile Reinf.
		BASE	TOP				Size	BC=BOLT CIRCLE			
CCTV 90	27.4	610	281	4.55*	914	51	51	737	1067 ø	3.6	15 - #22
CCTV 80	24.3	559	256	4.55*	864	51	51	686	1067 ø	3.3	15 - #22
CCTV 70	21.3	508	260	4.55	813	51	51	635	1067 ø	3.0	15 - #22
CCTV 60	18.2	457	248	4.55	762	51	51	584	1067 ø	2.7	15 - #22

*Lower pole segment thickness, see Pole Details

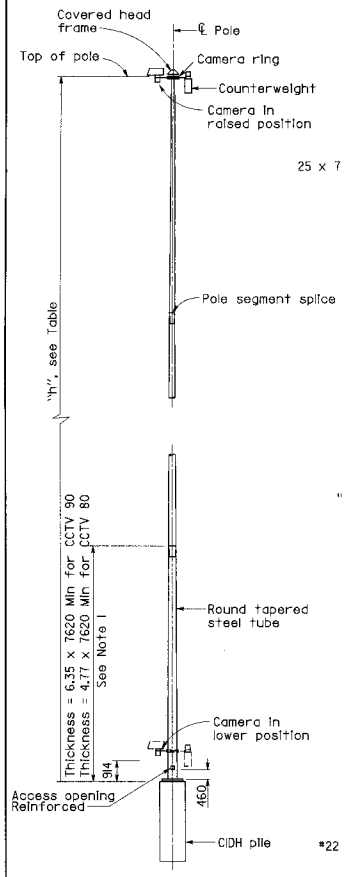

POLE DETAILS

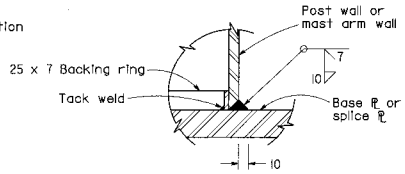

WELD DETAIL

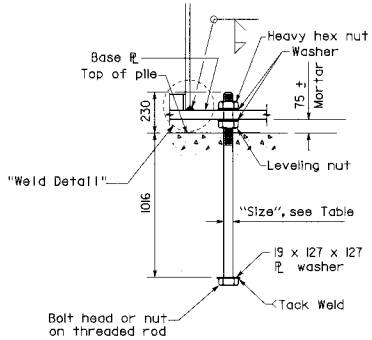

ANCHOR BOLT DETAIL

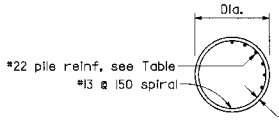

SECTION A-A

CIDH PILE DETAILS

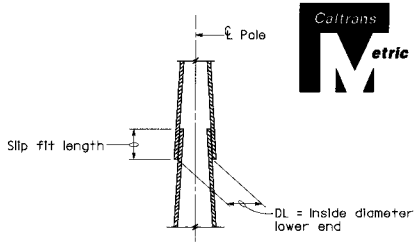

POLE SEGMENT SPLICE DETAIL

NOTE: Slip fit length shall not be less than 1.5 DL minus two inches.

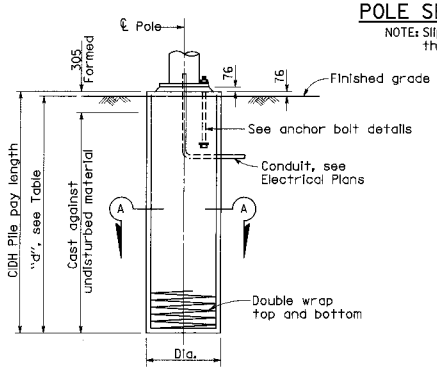

TYPICAL ELEVATION

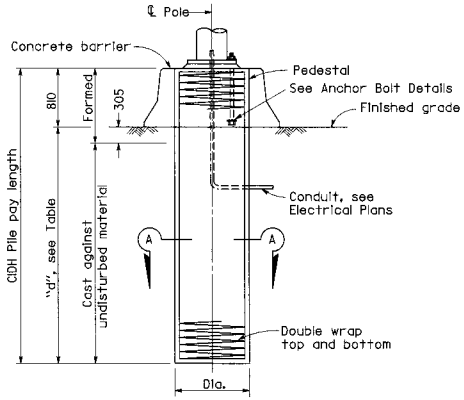

MEDIAN LOCATION

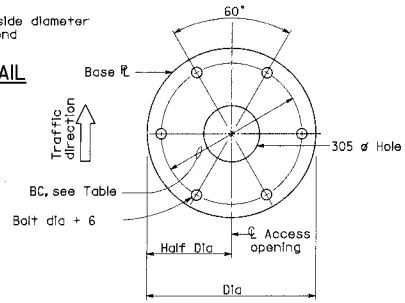

BASE PLATE DETAILS

GENERAL NOTES:

SPECIFICATIONS

Design : AASHTO specifications for the design and construction of structural supports for highway signs, dated 1994.

LOADING

Wind Loadings : 129 km/h AASHTO

UNIT STRESSES

Structural Steel : f_b Maximum allowed for design of tapered steel tube (pole) to be 379 MPa.

NOTES

1. Pole details shall suit the lowering device and this foundation plan. Pole details shall be submitted to the Engineer for approval.
2. Pole finishes shall be galvanized.
3. For camera details, see Electrical Plans.
4. Foundation design is based on a maximum wind velocity of 129 km/h.

STATE OF CALIFORNIA
DEPARTMENT OF TRANSPORTATION

CLOSED CIRCUIT TELEVISION 18.2 m TO 27.4 m HIGH MAST POLE FOUNDATION DETAILS

NO SCALE

ALL DIMENSIONS ARE IN MILLIMETERS UNLESS OTHERWISE SHOWN

RSP ES-16C DATED OCTOBER 26, 2000 SUPERSEDES STANDARD PLAN ES-16C DATED JULY 1, 1999-PAGE 338 OF THE STANDARD PLANS BOOK DATED JULY 1999.

REVISED STANDARD PLAN RSP ES-16C

DIST	COUNTY	ROUTE	KILOMETER POST TOTAL PROJECT	SHEET NO.	TOTAL SHEETS

Caltrans Metric

REGISTERED CIVIL ENGINEER

October 26, 2000
PLANS APPROVAL DATE

Jeffrey B. Woody No. C41260 Exp. 3-31-03 CIVIL STATE OF CALIFORNIA REGISTERED PROFESSIONAL ENGINEER

The State of California or its officers or agents shall not be responsible for the accuracy or completeness of electronic copies of this plan sheet.

To accompany plans dated _____

1999 REVISED STD. PLAN RSP ES-16C