STANDARD PLANS

STATE OF CALIFORNIA

BUSINESS, TRANSPORTATION AND HOUSING AGENCY

DEPARTMENT OF TRANSPORTATION

JULY, 1997

ISSUED BY

DEPARTMENT OF TRANSPORTATION

Current price for additional copies of this book may be obtained by writing

STATE OF CALIFORNIA
DEPARTMENT OF TRANSPORTATION
GENERAL PUBLICATION DISTRIBUTION UNIT
1900 ROYAL OAKS DRIVE
SACRAMENTO, CALIFORNIA 95815-3800
Telephone (916) 445-3520
Fax (916) 324-8997

WEB SITE ADDRESS TO STANDARD PLANS:

http: / / www.dot.ca.gov/hq/esc/projplan/ppintro.htm

JOHN GIZINOS
Editor
Engineering Service Center
Office of Office Engineer

FOREWORD

This July 1997 edition of the California Department of Transportation Standard Plans is the second edition of the Department's Standard Plans based on metric values using the International System of Units (SI).

Subsequent to the issuance of the July 1995 Standard Plans Book (first metric edition), the ASTM standards for metric bar reinforcing steel changed from a hard conversion to a soft conversion of imperial sized bars. The July 1997 edition of the Department's Standard Plans have been revised to conform to the new ASTM standards.

Symbols for (SI) metric units used in this July 1997 edition of the Standard Plans are shown on the included Standard Plan A10A, "Abbreviations.

The Department will continue to use the July 1995 edition of the Standard Specifications to support the July 1997 edition of the Standard Plans.

Caltrans Metric

TABLE OF CONTENTS

PLAN TITLE	PLAN NO.	PAGE
GENERAL ROAD WORK (Miscellaneous)	*Click on desired Plan Sheet*	
ABBREVIATIONS	A10A	1
SYMBOLS	A10B	2
PAVEMENT MARKERS AND TRAFFIC LINES, TYPICAL DETAILS	A20A	3
PAVEMENT MARKERS AND TRAFFIC LINES, TYPICAL DETAILS	A20B	4
PAVEMENT MARKERS AND TRAFFIC LINES, TYPICAL DETAILS	A20C	5
PAVEMENT MARKERS AND TRAFFIC LINES, TYPICAL DETAILS	A20D	6
PAVEMENT MARKINGS - ARROWS	A24A	7
PAVEMENT MARKINGS - ARROWS	A24B	8
PAVEMENT MARKINGS - SYMBOLS AND NUMERALS	A24C	9
PAVEMENT MARKINGS - WORDS	A24D	10
PAVEMENT MARKINGS - WORDS AND CROSSWALKS	A24E	11
PORTLAND CEMENT CONCRETE PAVING DETAILS	A35A	12
RUMBLE STRIP DETAILS	A40	13
EXCAVATION AND BACKFILL - MISCELLANEOUS DETAILS	A62A	14
LIMITS OF PAYMENT FOR EXCAVATION AND BACKFILL - BRIDGE SURCHARGE AND WALL	A62B	15
LIMITS OF PAYMENT FOR EXCAVATION AND BACKFILL - BRIDGE	A62C	16
EXCAVATION AND BACKFILL - CONCRETE PIPE CULVERTS	A62D	17
EXCAVATION AND BACKFILL - CAST-IN-PLACE REINFORCED CONCRETE BOX AND ARCH CULVERTS	A62E	18
EXCAVATION AND BACKFILL - METAL AND PLASTIC CULVERTS	A62F	19
OBJECT MARKERS	A73A	20
MARKERS	A73B	21
DELINEATORS, CHANNELIZERS AND BARRICADES	A73C	22
SURVEY MONUMENTS	A74	23
CONCRETE BARRIER TYPE 50	A75A	24
CONCRETE BARRIER TYPE 50E	A75B	25
CONCRETE HEADLIGHT GLARE SCREEN	A75D	26
CONCRETE BARRIER TYPE 60	A76A	27
CONCRETE BARRIER TYPE 60	A76B	28
CONCRETE BARRIER TYPE 60E	A76C	29
CONCRETE BARRIER TYPE 60G	A76D	30
CONCRETE BARRIER TYPE 60G	A76E	31
CONCRETE BARRIER TYPE 60GE	A76F	32
CONCRETE BARRIER TYPE 60S	A76G	33
CONCRETE BARRIER TYPE 60S	A76H	34
CONCRETE BARRIER TYPE 60SE	A76I	35
METAL BEAM GUARD RAILING	A77A	36
METAL BEAM GUARD RAILING - STANDARD HARDWARE	A77B	37
METAL BEAM GUARD RAILING - POSTS AND BLOCKS	A77C	38
GUARD RAILING FLARES	A77D	39
GUARD RAILING FLARES	A77E	40
METAL BEAM GUARD RAILING - MISCELLANEOUS DETAILS	A77F	41
GUARD RAILING END ANCHORS (BREAKAWAY)	A77G	42
ANCHOR ASSSEMBLY (BREAKAWAY, TYPE M) - HARDWARE AND POST DETAILS	A77GA	43
GUARD RAILING END ANCHORS - BREAKAWAY HARDWARE	A77H	44
BARRIER AND GUARD RAILING END ANCHORS	A77I	45
GUARD RAILING CONNECTIONS TO BRIDGE RAILINGS, RETAINING WALLS AND ABUTMENTS	A77J	46

PLAN TITLE	PLAN NO.	PAGE
GENERAL ROAD WORK (Miscellaneous) (Cont'd)	*Click on desired Plan Sheet*	
GUARD RAILING CONNECTIONS TO BRIDGE SIDEWALKS AND CURBS	A77K	47
THRIE BEAM BARRIER	A78A	48
THRIE BEAM BARRIER	A78B	49
THRIE BEAM BARRIER - STANDARD HARDWARE	A78C	50
THRIE BEAM BARRIER - MISCELLANEOUS DETAILS	A78D	51
THRIE BEAM BARRIER - END ANCHORS	A78E	52
THRIE BEAM BARRIER CONNECTIONS TO BRIDGE RAILING	A78F	53
THRIE BEAM BARRIER CONNECTIONS TO BRIDGE CURBS, RETAINING WALLS AND ABUTMENTS	A78G	54
THRIE BEAM BARRIER CONNECTION TO CONCRETE BARRIER TYPE 50	A78H	55
THRIE BEAM BARRIER CONNECTION TO CONCRETE BARRIER TYPE 60	A78I	56
CRASH CUSHION, SAND FILLED	A81	57
PORTABLE SCALE PAD AND APPROACH SLAB DETAILS	A83	58
CHAIN LINK FENCE	A85	59
BARBED WIRE AND WIRE MESH FENCES	A86	60
CURBS, DIKES AND DRIVEWAYS	A87	61
CURB RAMP DETAILS	A88	62
ACCESSIBLE PARKING	A90	63
GENERAL ROAD WORK (Crib Walls)		
REINFORCED CONCRETE CRIB WALL - BATTERED WALL - TYPES A, B AND C	C7A	64
REINFORCED CONCRETE CRIB WALL - BATTERED WALL - TYPES D, E AND F	C7B	65
REINFORCED CONCRETE CRIB WALL - VERTICAL WALL - TYPES A, B AND C	C7C	66
REINFORCED CONCRETE CRIB WALL - VERTICAL WALL - TYPES D, E AND F	C7D	67
REINFORCED CONCRETE CRIB WALL - TYPES A,B,C,D,E AND F - HEADER AND STRETCHER DETAILS	C7E	68
DESIGN DATA FOR REINFORCED CONCRETE CRIB WALL FOUNDATION PRESSURE-BATTERED WALL	C7F	69
REINFORCED CONCRETE CRIB WALL FOUNDATION PRESSURE - VERTICAL WALL	C7G	70
STEEL CRIB WALL CONSTRUCTION DETAILS	C8A	71
STEEL CRIB WALL DESIGN DATA	C8B	72
STEEL CRIB WALL DESIGN DATA	C8C	73
TIMBER CRIB WALL - TYPES A,B,C AND D	C9A	74
TIMBER CRIB WALL - TYPES A,B,C AND D - DESIGN DATA	C9B	75
GENERAL ROAD WORK (Drainage)		
DRAINAGE INLETS	D72	76
DRAINAGE INLETS	D73	77
DRAINAGE INLETS	D74A	78
DRAINAGE INLETS	D74B	79
DRAINAGE INLET DETAILS	D74C	80
PIPE INLET	D75	81
GRATE DETAILS	D77A	82
BICYCLE PROOF GRATE DETAILS	D77B	83
ALTERNATIVE HINGED COVER FOR TYPE OL AND OS INLETS AND TRASH RACK FOR TYPE OCP INLET	D77C	84
GUTTER DEPRESSIONS	D78	85
PRECAST REINFORCED CONCRETE PIPE - DIRECT DESIGN METHOD	D79	86
CAST-IN-PLACE REINFORCED CONCRETE SINGLE BOX CULVERT	D80	87
CAST-IN-PLACE REINFORCED CONCRETE DOUBLE BOX CULVERT	D81	88

PLAN TITLE	PLAN NO.	PAGE
GENERAL ROAD WORK (Drainage) (Cont'd)		
CAST-IN-PLACE REINFORCED CONCRETE BOX CULVERT MISCELLANEOUS DETAILS	D82	89
BOX CULVERT WINGWALLS - TYPES A, B AND C	D84	90
BOX CULVERT WINGWALLS - TYPES D AND E	D85	91
BOX CULVERT WARPED WINGWALLS	D86A	92
PIPE CULVERT HEADWALLS, ENDWALLS AND WARPED WINGWALLS	D86B	93
ARCH CULVERT HEADWALLS, ENDWALLS AND WARPED WINGWALLS	D86C	94
OVERSIDE DRAINS	D87A	95
OVERSIDE DRAINS	D87B	96
UNDERDRAINS	D87C	97
CONSTRUCTION LOADS ON CULVERTS	D88	98
STRUT DETAILS FOR STRUCTURAL STEEL PLATE PIPES, ARCHES AND VEHICULAR UNDERCROSSINGS	D88A	99
PIPE HEADWALLS	D89	100
PIPE CULVERT HEADWALLS, ENDWALLS AND WINGWALLS - TYPES A, B AND C	D90	101
PIPE RISER CONNECTIONS	D93A	102
DRAINAGE INLET RISER CONNECTIONS	D93B	103
PIPE RISER WITH DEBRIS RACK CAGE	D93C	104
METAL AND PLASTIC FLARED END SECTIONS	D94A	105
CONCRETE FLARED END SECTIONS	D94B	106
CONCRETE ARCH CULVERTS	D95	107
CORRUGATED METAL PIPE COUPLING DETAILS NO.1 - ANNULAR COUPLING BAND BAR AND STRAP AND ANGLE CONNECTORS	D97A	108
CORRUGATED METAL PIPE COUPLING DETAILS NO. 2 - HAT BAND COUPLER AND FLANGE DETAILS	D97B	109
CORRUGATED METAL PIPE COUPLING DETAILS NO. 3 - HELICAL AND UNIVERSAL COUPLERS	D97C	110
CORRUGATED METAL PIPE COUPLING DETAILS NO. 4 - HUGGER COUPLING BANDS	D97D	111
CORRUGATED METAL PIPE COUPLING DETAILS NO. 5 - STANDARD JOINT	D97E	112
CORRUGATED METAL PIPE COUPLING DETAILS NO. 6 - POSITIVE JOINT	D97F	113
CORRUGATED METAL PIPE COUPLING DETAILS NO. 7 - POSITIVE JOINTS AND DOWNDRAINS	D97G	114
REINFORCED CONCRETE PIPE OR NON - REINFORCED CONCRETE PIPE - STANDARD AND POSITIVE JOINTS	D97H	115
SLOTTED CORRUGATED STEEL PIPE DRAIN DETAILS	D98A	116
SLOTTED CORRUGATED STEEL PIPE DRAIN DETAILS	D98B	117
STRUCTURAL SECTION DRAINAGE SYSTEM DETAILS	D99A	118
EDGE DRAIN OUTLET AND VENT DETAILS	D99B	119
EDGE DRAIN CLEANOUT AND VENT DETAILS	D99C	120
CROSS DRAIN INTERCEPTOR DETAILS	D99D	121
GENERAL ROAD WORK (Planting and Irrigation)		
PLANTING AND IRRIGATION - ABBREVIATIONS	H1	122
PLANTING AND IRRIGATION - SYMBOLS	H2	123
PLANTING AND IRRIGATION DETAILS	H3	124
PLANTING AND IRRIGATION DETAILS	H4	125
PLANTING AND IRRIGATION DETAILS	H5	126
PLANTING AND IRRIGATION DETAILS	H6	127
PLANTING AND IRRIGATION DETAILS	H7	128
PLANTING AND IRRIGATION DETAILS	H8	129

Click on desired Plan Sheet

PLAN TITLE	PLAN NO.	PAGE
GENERAL ROAD WORK (Temporary Facilities)	*Click on desired Plan Sheet*	
TEMPORARY CRASH CUSHION, SAND FILLED	T1	130
TEMPORARY CRASH CUSHION, SAND FILLED	T2	131
TEMPORARY RAILING (TYPE K)	T3	132
TEMPORARY TRAFFIC SCREEN	T4	133
TEMPORARY TERMINAL SECTION (TYPE K)	T5	134
CONSTRUCTION PROJECT FUNDING IDENTIFICATION SIGNS	T7	135
TRAFFIC CONTROL SYSTEM FOR LANE CLOSURE ON FREEWAYS AND EXPRESSWAYS	T10	136
TRAFFIC CONTROL SYSTEM FOR LANE AND COMPLETE CLOSURES ON FREEWAYS AND EXPRESSWAYS	T10A	137
TRAFFIC CONTROL SYSTEM FOR LANE CLOSURE ON MULTILANE CONVENTIONAL HIGHWAYS	T11	138
TRAFFIC CONTROL SYSTEM FOR LANE CLOSURE ON MULTILANE CONVENTIONAL HIGHWAYS	T12	139
TRAFFIC CONTROL SYSTEM FOR LANE CLOSURE ON TWO LANE CONVENTIONAL HIGHWAYS	T13	140
TRAFFIC CONTROL SYSTEM FOR RAMP CLOSURES	T14	141
TRAFFIC CONTROL SYSTEM FOR MOVING LANE CLOSURE ON MULTILANE HIGHWAYS	T15	142
TRAFFIC CONTROL SYSTEM FOR MOVING LANE CLOSURE ON MULTILANE HIGHWAYS	T16	143
TRAFFIC CONTROL SYSTEM FOR MOVING LANE CLOSURE ON TWO LANE HIGHWAYS	T17	144
BRIDGE		
BRIDGE DETAILS	B0-1	145
BRIDGE DETAILS	B0-3	146
BRIDGE DETAILS	B0-5	147
BRIDGE DETAILS	B0-13	148
400 mm CAST-IN-DRILLED HOLE-CONCRETE PILE	B2-3	149
PILE DETAILS-CLASS 400 AND CLASS 625	B2-5	150
PILE DETAILS-CLASS 400C AND CLASS 625C	B2-6	151
PILE DETAILS-CLASS 900 AND CLASS 900C	B2-8	152
LOAD TEST PILE DETAILS (1)	B2-9	153
LOAD TEST PILE DETAILS (2)	B2-10	154
LOAD TEST PILE DETAILS (3)	B2-11	155
RETAINING WALL TYPE 1 - H=1200 THROUGH 9100 mm	B3-1	156
RETAINING WALL TYPE 1 - H=9700 THROUGH 10 900 mm	B3-2	157
RETAINING WALL TYPE 1A	B3-3	158
RETAINING WALL TYPE 2	B3-4	159
COUNTERFORT RETAINING WALL TYPE 3	B3-5	160
COUNTERFORT RETAINING WALL TYPE 4	B3-6	161
RETAINING WALL TYPE 5	B3-7	162
RETAINING WALL DETAILS NO. 1	B3-8	163
RETAINING WALL DETAILS NO. 2	B3-9	164
RETAINING WALL TYPE 6 - 1829 mm MAXIMUM	B3-11	165
T-BEAM DETAILS	B6-1	166
UTILITY OPENINGS, T-BEAM	B6-10	167
JOINT SEALS (MAXIMUM MOVEMENT RATING = 50 mm)	B6-21	168
BOX GIRDER DETAILS	B7-1	169
DECK DRAINS	B7-5	170
DECK DRAINS - TYPES D-1 AND D-2	B7-6	171
UTILITY OPENING - BOX GIRDER	B7-10	172

PLAN TITLE	PLAN NO.	PAGE
BRIDGE (Cont'd)	*Click on desired Plan Sheet*	
UTILITY DETAILS	B7-11	173
CAST-IN-PLACE PRESTRESSED GIRDER DETAILS	B8-5	174
CHAIN LINK RAILING	B11-7	175
CABLE RAILING	B11-47	176
TUBULAR HAND RAILING	B11-51	177
CHAIN LINK RAILING TYPE 7	B11-52	178
CONCRETE BARRIER TYPE 25	B11-53	179
CONCRETE BARRIER TYPE 26	B11-54	180
SLOPE PROTECTION DETAILS	B13-1	181
STRUCTURAL STEEL PLATE VEHICULAR UNDERCROSSING	B14-1	182
COMMUNICATION AND SPRINKLER CONTROL CONDUITS (CONDUIT LESS THAN SIZE 103)	B14-3	183
WATER SUPPLY LINE (BRIDGE) (PIPE LESS THAN NPS 4)	B14-4	184
WATER SUPPLY LINE (DETAILS) (PIPE LESS THAN NPS 4)	B14-5	185
ROADSIDE SIGNS		
ROADSIDE SIGNS, TYPICAL INSTALLLATION DETAILS NO. 1	RS1	186
ROADSIDE SIGNS - WOOD POST, TYPICAL INSTALLATION DETAILS NO. 2	RS2	187
ROADSIDE SIGNS - LAMINATED WOOD BOX POST TYPICAL INSTALLATION DETAILS NO. 3	RS3	188
ROADSIDE SIGNS, TYPICAL INSTALLATION DETAILS NO. 4	RS4	189
OVERHEAD SIGNS		
OVERHEAD SIGNS - TRUSS, INSTRUCTIONS AND EXAMPLES	S1	190
OVERHEAD SIGNS - TRUSS, SINGLE POST TYPE - POST TYPES II THRU VII	S2	191
OVERHEAD SIGNS - TRUSS, TWO POST TYPE - POST TYPES I-S THRU VII-S	S3	192
OVERHEAD SIGNS - TRUSS, SINGLE POST TYPE - STRUCTURAL FRAME MEMBERS	S4	193
OVERHEAD SIGNS - TRUSS TWO POST TYPE - STRUCTURAL FRAME MEMBERS	S5	194
OVERHEAD SIGNS - TRUSS, STRUCTURAL FRAME DETAILS	S6	195
OVERHEAD SIGNS -TRUSS, FRAME JUNCTURE DETAILS	S7	196
OVERHEAD SIGNS - STEEL FRAME - REMOVABLE SIGN PANEL FRAMES	S8A	197
OVERHEAD SIGNS - REMOVABLE SIGN PANEL FRAMES - OVERHEAD FORMED PANEL MOUNTING DETAILS	S8B	198
OVERHEAD SIGNS - TRUSS, SIGN PANEL MOUNTING DETAILS, LAMINATED PANEL - TYPE A	S8C	199
OVERHEAD SIGNS - TRUSS, REMOVABLE SIGN PANEL FRAMES - 2.794 m AND 3.048 m SIGN PANELS	S8D	200
OVERHEAD SIGNS - WALKWAY DETAILS NO. 1	S9	201
OVERHEAD SIGNS - WALKWAY DETAILS NO. 2	S10	202
OVERHEAD SIGNS - WALKWAY SAFETY RAILING DETAILS	S11	203
OVERHEAD SIGNS - TRUSS, PILE FOUNDATION	S13	204
OVERHEAD SIGNS - LIGHTWEIGHT BALANCED - SINGLE STEEL POST CONNECTION AND MOUNTING DETAILS	S14A	205
OVERHEAD SIGNS - LIGHTWEIGHT BALANCED - SINGLE STEEL POST DETAILS	S14B	206
OVERHEAD SIGNS - LIGHTWEIGHT, TYPE A, CONNECTION DETAILS	S15	207
OVERHEAD SIGNS - LIGHTWEIGHT, TYPE B, CONNECTION DETAILS	S16	208
OVERHEAD SIGNS - LIGHTWEIGHT, TYPE C, CONNECTION DETAILS	S17	209

PLAN TITLE | PLAN NO. | PAGE

OVERHEAD SIGNS (Cont'd)

Click on desired Plan Sheet

OVERHEAD SIGNS - LIGHTWEIGHT, SIGN PANEL MOUNTING DETAILS, LAMINATED PANEL - TYPE A S18A 210
OVERHEAD SIGNS - LIGHTWEIGHT, LIGHT FIXTURE MOUNTING DETAILS S18B 211
OVERHEAD SIGNS - LIGHTWEIGHT, POST DETAILS S20A 212
OVERHEAD SIGNS - LIGHTWEIGHT, FOUNDATION DETAILS S20B 213
OVERHEAD SIGNS - BOX BEAM CLOSED TRUSS, FOUNDATION DETAILS S39 214
OVERHEAD SIGNS - BOX BEAM CLOSED TRUSS, TWO POST TYPE FRAME MEMBERS S40A 215
OVERHEAD SIGNS - BOX BEAM CLOSED TRUSS, SINGLE AND TWO POST TYPE, GENERAL FRAME DETAILS S40B 216
OVERHEAD SIGNS - BOX BEAM CLOSED TRUSS, RIBBED SHEET METAL DETAILS S40C 217
OVERHEAD SIGNS - BOX BEAM CLOSED TRUSS, TWO POST TYPE, FRAME DETAILS S40D 218
OVERHEAD SIGNS - BOX BEAM CLOSED TRUSS, TWO POST TYPE, FRAME JUNCTURE DETAILS S40E 219
OVERHEAD SIGNS - BOX BEAM CLOSED TRUSS, TWO POST TYPE, POST DETAILS S40F 220
OVERHEAD SIGNS - BOX BEAM CLOSED TRUSS, SINGLE POST TYPE, FRAME MEMBERS S40G 221
OVERHEAD SIGNS - BOX BEAM CLOSED TRUSS, SINGLE POST CANTILEVER, FRAME DETAILS S40H 222
OVERHEAD SIGNS - BOX BEAM CLOSED TRUSS, SINGLE POST CANTILEVER, FRAME JUNCTURE DETAILS S40I 223
OVERHEAD SIGNS - BOX BEAM CLOSED TRUSS, SINGLE POST CANTILEVER, POST DETAILS S40J 224
OVERHEAD SIGNS - BOX BEAM CLOSED TRUSS, SINGLE POST BUTTERFLY, FRAME DETAILS S40K 225
OVERHEAD SIGNS - BOX BEAM CLOSED TRUSS, SINGLE POST BUTTERFLY, FRAME JUNCTURE DETAILS S40L 226
OVERHEAD SIGNS - BOX BEAM CLOSED TRUSS, SINGLE POST BUTTERFLY, POST DETAILS S40M 227
OVERHEAD SIGNS- TUBULAR, INSTRUCTIONS AND EXAMPLES S40N 228
OVERHEAD SIGNS - TUBULAR, SINGLE POST TYPE, LAYOUT AND PIPE SELECTION S40P 229
OVERHEAD SIGNS - TUBULAR, TWO POST TYPE, LAYOUT AND PIPE SELECTION S40Q 230
OVERHEAD SIGNS - TUBULAR, STRUCTURAL FRAME DETAILS NO. 1 ..... S40R 231
OVERHEAD SIGNS - TUBULAR, STRUCTURAL FRAME DETAILS NO. 2 ..... S40S 232
OVERHEAD SIGNS - TUBULAR, FOUNDATION DETAILS S40T 233

SIGNALS, LIGHTING AND ELECTRICAL SYSTEMS

SIGNAL, LIGHTING AND ELECTRICAL SYSTEMS - SYMBOLS AND ABBREVIATIONS ES-1A 234
SIGNAL, LIGHTING AND ELECTRICAL SYSTEMS - SYMBOLS AND ABBREVIATIONS ES-1B 235
SIGNAL, LIGHTING AND ELECTRICAL SYSTEMS - SERVICE EQUIPMENT ES-2A 236
SIGNAL, LIGHTING AND ELECTRICAL SYSTEMS - SERVICE EQUIPMENT ES-2B 237
SIGNAL, LIGHTING AND ELECTRICAL SYSTEMS - SERVICE EQUIPMENT NOTES ES-2C 238
SIGNAL, LIGHTING AND ELECTRICAL SYSTEMS - SERVICE EQUIPMENT AND TYPICAL WIRING DIAGRAM TYPE A ES-2D 239

PLAN TITLE	PLAN NO.	PAGE
SIGNALS, LIGHTING AND ELECTRICAL SYSTEMS (Cont'd)		
	Click on desired Plan Sheet	
SIGNAL, LIGHTING AND ELECTRICAL SYSTEMS - SERVICE EQUIPMENT AND TYPICAL WIRING DIAGRAM TYPE B	ES-2E	240
SIGNAL, LIGHTING AND ELECTRICAL SYSTEMS - SERVICE EQUIPMENT AND TYPICAL WIRING DIAGRAM TYPE C	ES-2F	241
SIGNAL, LIGHTING AND ELECTRICAL SYSTEMS - SIGNAL HEADS AND MOUNTINGS	ES-3A	242
SIGNAL, LIGHTING AND ELECTRICAL SYSTEMS - SIGNAL HEADS AND MOUNTINGS	ES-3B	243
SIGNAL, LIGHTING AND ELECTRICAL SYSTEMS - SIGNAL HEADS AND MOUNTINGS	ES-3C	244
SIGNAL, LIGHTING AND ELECTRICAL SYSTEMS - SIGNAL HEADS AND MOUNTINGS	ES-3D	245
SIGNAL, LIGHTING AND ELECTRICAL SYSTEMS - SIGNAL HEADS AND MOUNTINGS	ES-3E	246
SIGNAL, LIGHTING AND ELECTRICAL SYSTEMS - CONTROLLER CABINET DETAILS	ES-4A	247
SIGNAL, LIGHTING AND ELECTRICAL SYSTEMS - CONTROLLER CABINET DETAILS	ES-4B	248
SIGNAL, LIGHTING AND ELECTRICAL SYSTEMS - CONTROLLER CABINET DETAILS	ES-4C	249
IRRIGATION CONTROLLER ENCLOSURE CABINET	ES-4D	250
SIGNAL, LIGHTING AND ELECTRICAL SYSTEMS - DETECTORS	ES-5A	251
SIGNAL, LIGHTING AND ELECTRICAL SYSTEMS - DETECTORS	ES-5B	252
SIGNAL, LIGHTING AND ELECTRICAL SYSTEMS - DETECTORS	ES-5C	253
SIGNAL, LIGHTING AND ELECTRICAL SYSTEMS - DETECTORS	ES-5D	254
SIGNAL, LIGHTING AND ELECTRICAL SYSTEMS - DETECTORS	ES-5E	255
SIGNAL, LIGHTING AND ELECTRICAL SYSTEMS - PEDESTRIAN BARRICADES	ES-5F	256
SIGNAL AND LIGHTING STANDARDS - TYPE 1 STANDARDS AND EQUIPMENT NUMBERING	ES-6A	257
SIGNAL STANDARDS - PUSH BUTTON POSTS	ES-6AA	258
LIGHTING STANDARDS - TYPES 15, 21 AND 22	ES-6B	259
LIGHTING STANDARDS - 24.4 m TO 48.8 m HIGH MAST LIGHT POLE FOUNDATION DETAILS	ES-6C	260
LIGHTING STANDARDS - TYPES 30 AND 31	ES-6D	261
LIGHTING STANDARDS - TYPE 32	ES-6DA	262
LIGHTING STANDARDS - TYPE 30 AND 31 BASE DETAILS	ES-6E	263
LIGHTING STANDARDS - 10 DEGREE TYPE	ES-6F	264
LIGHTING STANDARDS - 10 DEGREE TYPE DETAILS	ES-6H	265
SIGNAL AND LIGHTING STANDARDS - CASE 1 ARM LOADING, WIND VELOCITY=113 km/h , ARM LENGTHS 4.6 m TO 9.1 m	ES-6J	266
SIGNAL AND LIGHTING STANDARDS - CASE 2 ARM LOADING, WIND VELOCITY= 113 km/h , ARM LENGTHS 6.1 m TO 9.1 m	ES-6K	267
SIGNAL AND LIGHTING STANDARDS - CASE 3 ARM LOADING, WIND VELOCITY= 113 km/h, ARM LENGTHS 4.6 m TO 13.7 m	ES-6L	268
SIGNAL AND LIGHTING STANDARDS - CASE 4 ARM LOADING, WIND VELOCITY= 113 km/h, ARM LENGTHS 7.6 m TO 13.7 m	ES-6M	269

PLAN TITLE | PLAN NO. | PAGE

SIGNALS, LIGHTING AND ELECTRICAL SYSTEMS (Cont'd)

Click on desired Plan Sheet

SIGNAL AND LIGHTING STANDARDS - CASE 5 ARM LOADING, WIND VELOCITY= 113 km/h, ARM LENGTHS 15.2 m TO 16.8 m ES-6MA 270
SIGNAL AND LIGHTING STANDARDS - TYPE 40-0-129 ..... ES-6N 271
SIGNAL AND LIGHTING STANDARDS - CASE 1 ARM LOADING, WIND VELOCITY= 129 km/h, ARM LENGTH 7.6 m TO 9.1 m ES-6O 272
SIGNAL AND LIGHTING STANDARDS - CASE 2 ARM LOADING, WIND VELOCITY= 129 km/h, ARM LENGTH 6.1 m TO 9.1 m ES-6P 273
SIGNAL AND LIGHTING STANDARDS - CASE 3 ARM LOADING, WIND VELOCITY= 129 km/h, ARM LENGTH 6.1 m TO 13.7 m ES-6Q 274
SIGNAL AND LIGHTING STANDARDS - CASE 4 ARM LOADING, WIND VELOCITY= 129 km/h, ARM LENGTH 7.6 m TO 13.7 m ES-6R 275
SIGNAL AND LIGHTING STANDARDS - CASE 5 ARM LOADING, WIND VELOCITY= 129 km/h, ARM LENGTH 15.2 m TO 16.8 m ES-6RA 276
SIGNAL AND LIGHTING STANDARDS - CASE 5 ARM LOADING, WIND VELOCITY= 129 km/h, ARM LENGTH 18.2 m TO 19.8 m ES-6RB 277
SIGNAL AND LIGHTING STANDARDS - DETAILS NO 1 ..... ES-6S 278
SIGNAL AND LIGHTING STANDARDS - DETAILS NO.2 ..... ES-6T 279
SIGNAL AND LIGHTING STANDARDS - POLE AND MAST ARM ALTERNATIVES ES-6TA 280
LIGHTING STANDARDS - TYPE 15, SLIP BASE INSERT ES-6U 281
SIGNAL AND SIGN STANDARDS - TYPE 33, LEFT TURN ES-6V 282
SIGNAL, LIGHTING AND ELECTRICAL SYSTEMS - ELECTRICAL DETAILS, STRUCTURE INSTALLATIONS ES-7A 283
SIGNAL, LIGHTING AND ELECTRICAL SYSTEMS - ELECTRICAL DETAILS, STRUCTURE INSTALLATIONS ES-7B 284
SIGNAL, LIGHTING AND ELECTRICAL SYSTEMS - ELECTRICAL DETAILS, STRUCTURE INSTALLATIONS ES-7C 285
SIGNAL, LIGHTING AND ELECTRICAL SYSTEMS - ELECTRICAL DETAILS, STRUCTURE INSTALLATIONS ES-7D 286
SIGNAL, LIGHTING AND ELECTRICAL SYSTEMS - ELECTRICAL DETAILS, STRUCTURE INSTALLATIONS ES-7E 287
SIGNAL, LIGHTING AND ELECTRICAL SYSTEMS - FLUSH SOFFIT LUMINAIRE MODIFICATION DETAILS, STRUCTURE INSTALLATIONS ES-7F 288
SIGNAL, LIGHTING AND ELECTRICAL SYSTEMS - PULL BOX DETAILS ES-8 289
SIGNAL, LIGHTING AND ELECTRICAL SYSTEMS - CANTILEVER FLASHING BEACON, TYPES 9, 9A AND 9B ES-9A 290
SIGNAL, LIGHTING AND ELECTRICAL SYSTEMS - CANTILEVER FLASHING BEACON, TYPES 9, 9A AND 9B ES-9B 291
SIGNAL, LIGHTING AND ELECTRICAL SYSTEMS - ISOLUX DIAGRAMS ES-10 292
SIGNAL, LIGHTING AND ELECTRICAL SYSTEMS - FOUNDATION INSTALLATIONS ES-11 293
SIGNAL, LIGHTING AND ELECTRICAL SYSTEMS - PEDESTRIAN UNDERCROSSING FLUORESCENT LIGHTING FIXTURE ES-12 294
SIGNAL, LIGHTING AND ELECTRICAL SYSTEMS - SPLICING DETAILS ES-13 295
SIGNAL, LIGHTING AND ELECTRICAL SYSTEMS - WIRING DETAILS AND FUSE RATINGS ES-14 296
SIGNAL, LIGHTING AND ELECTRICAL SYSTEMS - PEDESTRIAN OVERCROSSING FLUORESCENT LIGHTING FIXTURE ES-15 297
SIGNAL, LIGHTING AND ELECTRICAL SYSTEMS - EXTINGUISHABLE MESSAGE SIGN, 250 mm LETTERS ES-27A 298

PLAN TITLE	PLAN NO.	PAGE
SIGNALS, LIGHTING AND ELECTRICAL SYSTEMS (Cont'd)		
	Click on desired Plan Sheet	
SIGNAL, LIGHTING AND ELECTRICAL SYSTEMS - EXTINGUISHABLE MESSAGE SIGN, 250 mm LETTERS	ES-27B	299
SIGNAL, LIGHTING AND ELECTRICAL SYSTEMS - EXTINGUISHABLE MESSAGE SIGN AND FLASHING BEACONS	ES-28	300
SIGN ILLUMINATION - MERCURY SIGN ILLUMINATION EQUIPMENT	ES-29	301
SIGN ILLUMINATION - 915 mm FLUORESCENT SIGN ILLUMINATION EQUIPMENT	ES-30	302
SIGN ILLUMINATION - SIGN ILLUMINATION EQUIPMENT	ES-32A	303
SIGN ILLUMINATION - SIGN ILLUMINATION CONTROL	ES-32B	304
SIGN ILLUMINATION - INTERNALLY ILLUMINATED STREET NAME SIGN	ES-33	305
CLOSED CIRCUIT TELEVISION POLE DETAILS	ES-34A	306
CLOSED CIRCUIT TELEVISION POLE DETAILS-OVERHEAD SIGN MOUNTED	ES-34B	307

DIST	COUNTY	ROUTE	KILOMETER POST TOTAL PROJECT	SHEET NO.	TOTAL SHEETS

Caltrans Metric

REGISTERED CIVIL ENGINEER

July 1, 1997
PLANS APPROVAL DATE

REGISTERED PROFESSIONAL ENGINEER Jerry Champa No. 040573 Exp. 3-31-99 CIVIL STATE OF CALIFORNIA

The State of California or its officers or agents shall not be responsible for the accuracy or completeness of electronic copies of this plan sheet.

A

AB	aggregate base
ABBC	asbestos bonded bituminous coated
ABM	air-blown mortar
Abn	abandon
Abut	abutment
AC	asphalt concrete
ACB	asphalt concrete base
ACP	asbestos cement pipe
AFES	alternative flared end section
Ahd	ahead
Adj	adjust
Alt	alternate
AP	alternative pipe
APC	alternative pipe culvert
APU	alternative pipe underdrain
AS	aggregate subbase
ASRP	aluminum spiral rib pipe
Assy	assembly
ATPB	asphalt treated permeable base
ATPM	asphalt treated permeable material
Ave	avenue

B

BB	beginning of bridge
BC	begin horizontal curve
BCR	begin curb return
Beg	begin
Blt Ctd	bituminous coated
Bk	back
Bkf	backfill
Bldg	building
Blvd	boulevard
BM	bench mark
Br	bridge
BVC	begin vertical curve
BW	barbed wire

C

CAA	cable anchor assembly
CAP	corrugated aluminum pipe
CAPA	corrugated aluminum pipe arch
CAS	construction area sign
C-C	center to center
Chnl	channel
CIDH	cast-in-drilled-hole
CIP	cast iron pipe
CIPCP	cast-in-place concrete pipe
℄	centerline
CL	chain link
Cl	class
Clr	clear, clearance
Co	county
Col	column
Conc	concrete
Cond	conduit
Conn	connector
Const	construct(ion)
Coord	coordinate
Cr	creek
CRSP	concreted rock slope protection
CSP	corrugated steel pipe
CSPA	corrugated steel pipe arch
CTB	cement treated base
CTPB	cement treated permeable base
CTPM	cement treated permeable material
Culv	culvert

D

D	depth
Dbl	double
DD	downdrain
Del	delineator
Det	detour or detail
DF	Douglas Fir
DI	drainage inlet
Dia	diameter
Dist	distance
DMBB	double metal beam barrier
Dr	drive
DTBB	double thrie beam barrier
Dwy	driveway

E

EA	each
Ease	easement
EB	end of bridge or eastbound
EC	end horizontal curve
ECR	end curb return
ED	edge drain
EDC	edge drain cleanout
EDO	edge drain outlet
EDV	edge drain vent
Elev	elevation
Emb	embankment
EP	edge of pavement
Eq	equation
ES	edge of shoulder
ETW	edge of traveled way
EVC	end vertical curve
EW	endwall
Exc	excavation
Exist	existing
Exp	expressway
Exp Jt	expansion joint

F

F & C	frame and cover
Fdn	foundation
FEBT	facing eastbound traffic
FNBT	facing northbound traffic
FSBT	facing southbound traffic
FWBT	facing westbound traffic
FES	flared end section
FF	filter fabric
F & G	frame and grate
FG	finished grade
FH	fire hydrant
FL	flow line
Fr Rd	frontage road
Ftg	footing
Fwy	freeway

G

Ga	gage
Galv	galvanized
GP	grading plane
GR	guard railing
GSP	galvanized steel pipe

H

H	height, hour
HD	horizontal drain
Horiz	horizontal
HP	hinge point
HS	high strength
HW	headwall
Hwy	highway

I

IB	imported borrow
ID	inside diameter
Inv	invert
Irr	irrigation

J

JP	joint pole
JS	junction structure
Jt	joint

K

KP	kilometer post

L

L	length, liter
LCB	lean concrete base
Loc	location
LOL	layout line
Ln	lane
LS	lump sum
Lt	left

M

Max	maximum
MB	metal beam
MBB	metal beam barrier
MBGR	metal beam guard railing
Med	median
MH	manhole
Mkr	marker
Min	minimum, minutes
Misc I&S	miscellaneous iron and steel
Misc	miscellaneous
Mod	modified or modify
Mon	monument
MP	metal plate
MPGR	metal plate guard railing
MR	movement rating
Mtl	material

N

NB	northbound
No.	number
NPS	nominal pipe size
Ø	nominal diameter

O

Oblr	obliterate
OC	overcrossing
OD	outside diameter
OG	original ground
OGAC	open graded asphalt concrete
OH	overhead

P

PAP	perforated aluminum pipe
PB	pull box
PC	point of curvature
PCC	point of compound curve or portland cement concrete
PCP	perforated concrete pipe
PCVC	point of compound vertical curve
Ped	pedestrian
Ped OC	pedestrian overcrossing
Ped UC	pedestrian undercrossing
Perm Mtl	permeable material
PG	profile grade
PI	point of intersection
PL, P/L	property line
ℙ, PL	plate
PM	post mile
PN	paving notch
POC	point on horizontal curve
POT	point on tangent
POVC	point on vertical curve
PP	power pole, plastic pipe
PPP	perforated plastic pipe
PPL	preformed permeable liner
PRC	point of reverse curve
PRF	pavement reinforcing fabric
PRVC	point of reverse vertical curve
PSP	perforated steel pipe
PVC	polyvinyl chloride
Pvmt	pavement

R

R	radius
RCA	reinforced concrete arch
RCB	reinforced concrete box
RCP	reinforced concrete pipe
RCPA	reinforced concrete pipe arch
R & D	remove and dispose
Rd	road
Reinf	reinforced or reinforcing
Rel	relocate
Ret	retaining
RM	road-mixed
RP	reference point
RR	railroad
R & S	remove and salvage
RSP	rock slope protection
Rt	right
Rte	route
RW	retaining wall
R/W	right of way

S

SAE	structure approach embankment
Salv	salvage
SAPP	structural aluminum plate pipe
SB	southbound
SC	sand cushion
Ⓛ	station line
SCSP	slotted corrugated steel pipe or sacked concrete slope protection
SD	storm drain / structural section drain / subgrade drain
Sec	section
Sep	separation
SG	subgrade
Shld	shoulder
Sht	sheet
SI	International System of Units
SM	selected material
Spec	special
SPP	slotted plastic pipe
SS	slope stake
SSBM	strap and saddle bracket method
SSPA	structural steel plate arch
SSPP	structural steel plate pipe
SSPPA	structural steel plate pipe arch
SSRP	steel spiral rib pipe
St	street
STA, Sta	station
STBB	single thrie beam barrier
Std	standard
Str	structure
Surf	surfacing
SW	sidewalk or sound wall
Swr	sewer

T

T	semi-tangent
TAB	tablet
TBB	thrie beam barrier
Tbr	timber
TC	top of curb
TCB	traffic control box
Temp	temporary
TG	top of grate
TP	telephone pole
TPB	treated permeable base
TPM	treated permeable material
Trans	transition
TS	traffic signal or tubular steel
Typ	typical
Typ Sec	typical section

U

UC	undercrossing
UD	underdrain
UP	underpass

V

V	design speed, valve
Var	variable
VC	vertical curve
VCP	vitrified clay pipe
Vert	vertical
Via	viaduct

W

W	width
WB	westbound
WH	weep hole
WM	wire mesh
WSP	welded steel pipe
WV	water valve
WW	wing wall

X

Xing	crossing
X Sec	cross section

SI PREFIXES

SYMBOL	PREFIX	MULTIPLICATION FACTOR
m	milli-	10^{-3}
k	kilo-	10^{3}
M	mega-	10^{6}
G	giga-	10^{9}

METRIC UNITS (SI)

SYMBOL	UNIT
m	meter
g	gram
s	second
A	ampere
°C	degrees Celsius
Hz	hertz
N	newton
Pa	pascal
L	liter
ha	hectare
W	Watt

STATE OF CALIFORNIA
DEPARTMENT OF TRANSPORTATION

ABBREVIATIONS

NO SCALE

A10A

STD. PLAN A10A

Return to Table of Contents

EXISTING TOPOGRAPHIC LINES AND SYMBOLS

- Building
- Foundation or Ruin
- Shoulder
- Surfaced Road with Lane Stripe
- Curb without Gutter
- Curb with Gutter
- Gravel or Dirt Road Drives or Walks
- Trail
- Railroad
- Bridge
- Culvert and Headwalls
- Fence and Gate
- Retaining Wall with Fence on Top
- Wall
- Median Barrier
- Guard Rail
- Small Stream or Ditch
- Large Body of Water
- Small Body of Water
- Vineyard (Show row direction)
- Orchard, Missing Tree, Interior Trees
- Tree
- Trees
- Ground Cover
- Freeway Signs (Overhead) — 2 Posts, 1 Post
- Roadside Signs (New & Existing) — 2 Posts, 1 Post
- Transmission Tower
- Fire Hydrant
- Power Pole (New & Existing)
- Utility Pole (New & Existing)
- Stand Pipe, Flagpole, Pullbox, Windmill, Well, Crash Cushion, Valve Cover
- Aerial Photo Center

CONTROL POINTS

- Horizontal and Vertical Control Point
- Horizontal Control Point
- Vertical Control Point
- Bench Mark

NEW CONSTRUCTION AND CADASTRAL SYMBOLS

- ℄, ℄ or LOL — 9, 260 — Centerline, Station Line, Layout Line; Intermediate ticks @ 20 m intervals
- R/W — Right of Way Line
- Toe of Slope, C F, Top of Cut — Slope Line
- OG — Original Ground Line
- State, County, City, Forest, Subdivision, Section, Grant, Rancho — Boundary Line
- Structure (Bridge)

Underground Utilities

- W — Water
- G — Gas
- S — Sewer
- E — Electric
- T — Telephone
- GS — Gasoline
- O — Oil
- TV — Television

- Existing Wall
- New Wall — Face of Wall-LOL
- Existing Guard Railing
- New Guard Railing
- Concrete Barrier
- Double Metal Beam Barrier, Double Thrie Beam Barrier
- Curb without Gutter
- Curb with Gutter
- Fence
- Ditch Flow Line
- Dike and Overside Drain — AC Dike, AC Overside Drain, Downdrain
- Pipe Culvert (900 mm or less in diameter) — Pipe Inlet, Drainage Inlet, Flared End Section
- Pipe Culvert (greater than 900 mm in diameter) — Headwall, Endwall
- Railroad

DIST	COUNTY	ROUTE	KILOMETER POST TOTAL PROJECT	SHEET NO.	TOTAL SHEETS

REGISTERED CIVIL ENGINEER

July 1, 1997
PLANS APPROVAL DATE

REGISTERED PROFESSIONAL ENGINEER — Jerry Champa — No. 040573 — Exp. 3-31-99 — CIVIL — STATE OF CALIFORNIA

The State of California or its officers or agents shall not be responsible for the accuracy or completeness of electronic copies of this plan sheet.

STATE OF CALIFORNIA
DEPARTMENT OF TRANSPORTATION

SYMBOLS

NO SCALE

A10B

STD. PLAN A10B

Return to Table of Contents

The State of California or its officers or agents shall not be responsible for the accuracy or completeness of electronic copies of this plan sheet.

California Metric

DIST	COUNTY	ROUTE	KILOMETER POST TOTAL PROJECT	SHEET NO.	TOTAL SHEETS

REGISTERED CIVIL ENGINEER

July 1, 1997
PLANS APPROVAL DATE

REGISTERED PROFESSIONAL ENGINEER
Gerry Weis
No. C18915
Exp. 6-30-01
CIVIL
STATE OF CALIFORNIA

CENTERLINES
(2 LANE HIGHWAYS)

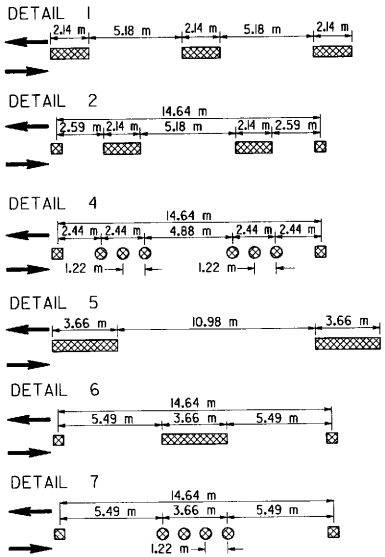

LANELINES
(MULTILANE HIGHWAYS)

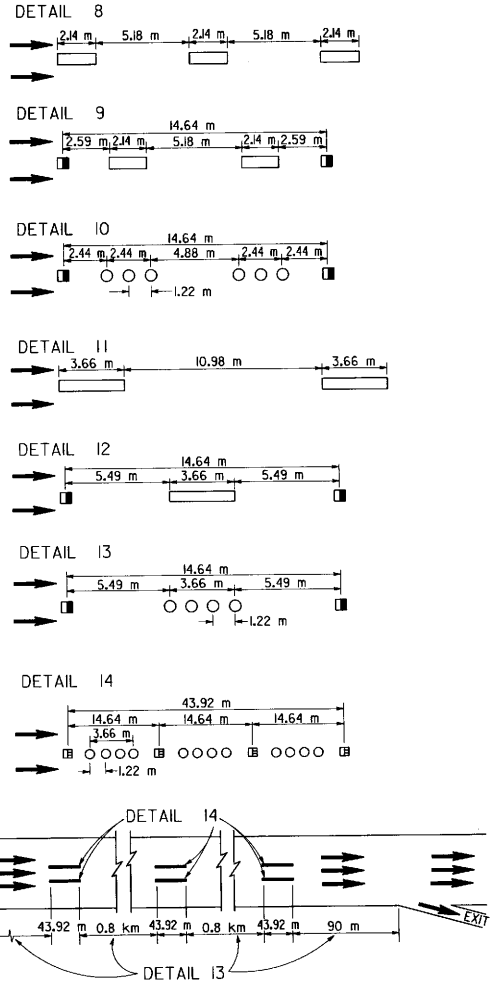

NO PASSING ZONES-ONE DIRECTION

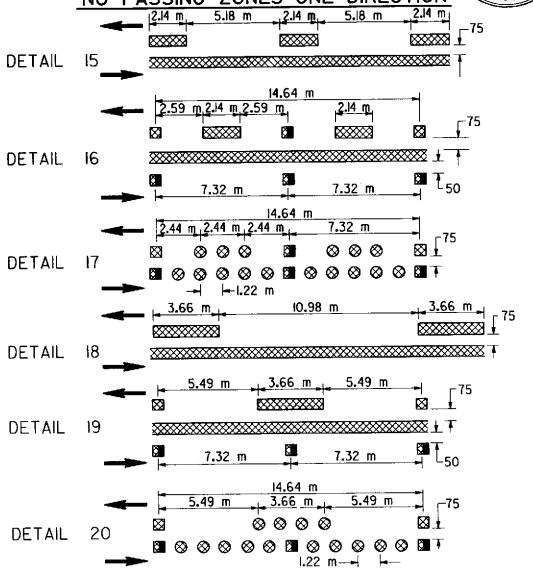

NO PASSING ZONES-TWO DIRECTIONS

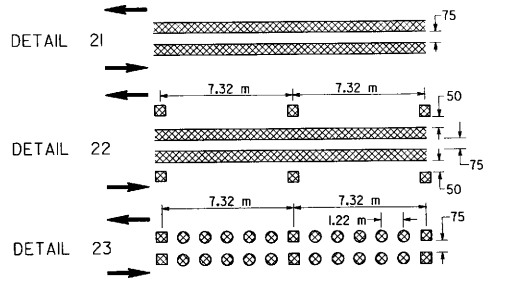

MARKER DETAILS

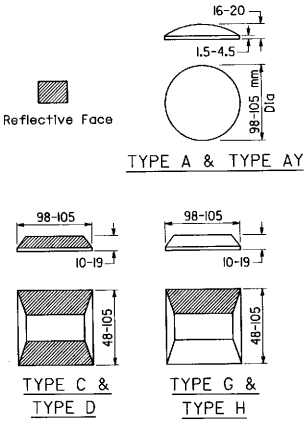

LEGEND

MARKERS

- TYPE A White Non-reflective
- TYPE AY Yellow Non-reflective
- TYPE C Red-clear Reflective
- TYPE D Two-way Yellow Reflective
- TYPE G One-way Clear Reflective
- TYPE H One-way Yellow Reflective

LINES

- 100 mm White
- 100 mm Yellow
- Direction of Travel

NOTES

1. Minimum projected area of reflective face = 65 square millimeters
2. Reflective markers need not be rectangular
3. Detail 3 deleted

STATE OF CALIFORNIA
DEPARTMENT OF TRANSPORTATION

PAVEMENT MARKERS AND TRAFFIC LINES TYPICAL DETAILS

NO SCALE

ALL DIMENSIONS ARE IN MILLIMETERS UNLESS OTHERWISE SHOWN

A20A

STD. PLAN A20A

Return to Table of Contents

DIST	COUNTY	ROUTE	KILOMETER POST TOTAL PROJECT	SHEET NO.	TOTAL SHEETS

Caltrans Metric

REGISTERED CIVIL ENGINEER

July 1, 1997
PLANS APPROVAL DATE

REGISTERED PROFESSIONAL ENGINEER Gerry Meis No. C18915 Exp. 6-30-01 CIVIL STATE OF CALIFORNIA

The State of California or its officers or agents shall not be responsible for the accuracy or completeness of electronic copies of this plan sheet.

LEFT EDGELINES
(Divided Highways)

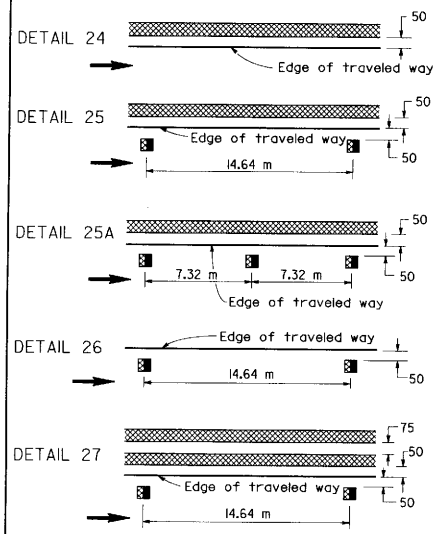

RIGHT EDGELINE

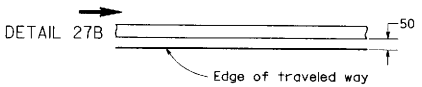

RIGHT EDGELINE EXTENSION THROUGH INTERSECTIONS

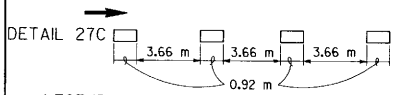

LEGEND

MARKERS

- TYPE D Two-way Yellow Reflective
- TYPE AY Yellow Non-reflective
- TYPE H One-way Yellow Reflective

LINES

- 100 mm White
- 100 mm Yellow

Direction of Travel

MEDIAN ISLANDS

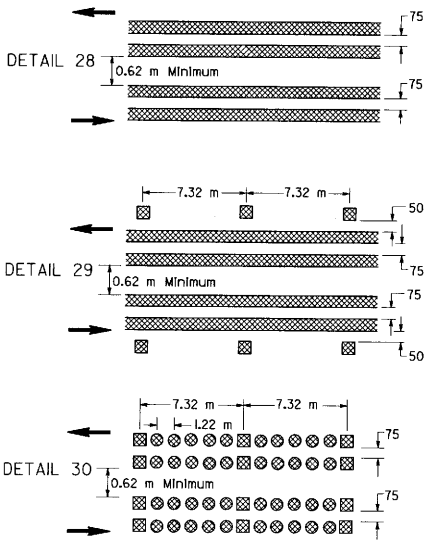

MARKER DETAILS

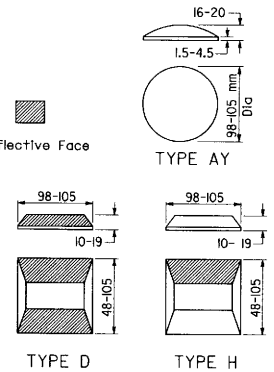

NOTES

1. Minimum projected area of reflective face = 65 square millimeters
2. Reflective marker need not be rectangular
3. Detail 27A deleted

TWO-WAY LEFT TURN LANES

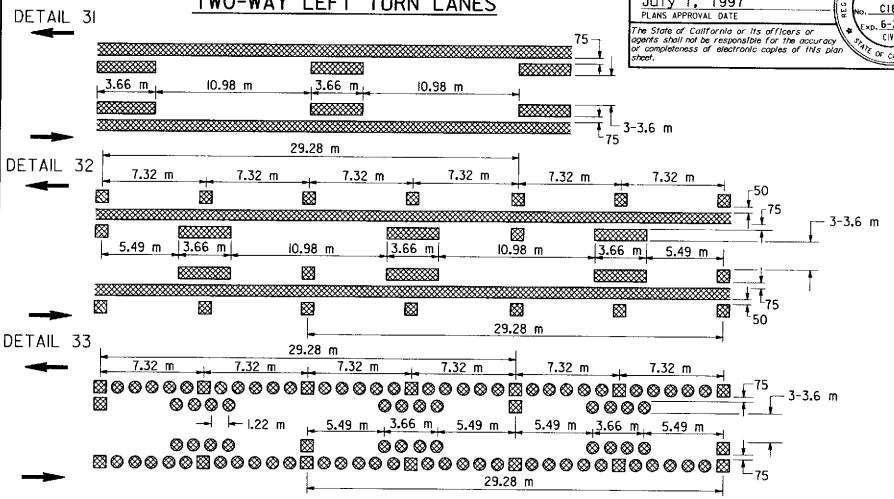

INTERSECTION TREATMENTS

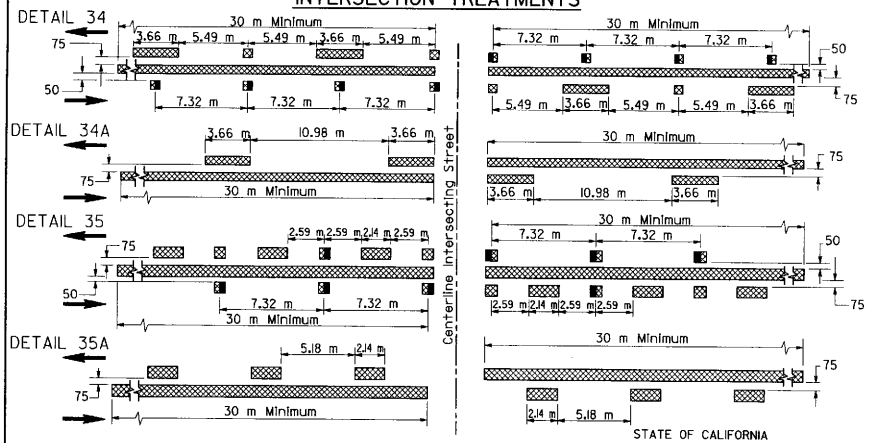

STATE OF CALIFORNIA
DEPARTMENT OF TRANSPORTATION

PAVEMENT MARKERS AND TRAFFIC LINES TYPICAL DETAILS

NO SCALE

ALL DIMENSIONS ARE IN MILLIMETERS UNLESS OTHERWISE SHOWN

A20B

STD. PLAN A20B

Return to Table of Contents

DIST	COUNTY	ROUTE	KILOMETER POST TOTAL PROJECT	SHEET NO.	TOTAL SHEETS

REGISTERED CIVIL ENGINEER

July 1, 1997
PLANS APPROVAL DATE

REGISTERED PROFESSIONAL ENGINEER Gerry Mels No. C18915 Exp. 6-30-01 CIVIL STATE OF CALIFORNIA

The State of California or its officers or agents shall not be responsible for the accuracy or completeness of electronic copies of this plan sheet.

California Metric

EXIT RAMP NEUTRAL AREA (GORE) TREATMENT

DETAIL 36

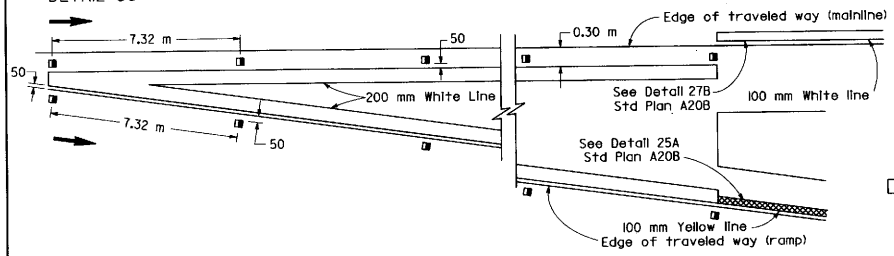

ENTRANCE RAMP NEUTRAL AREA (GORE) TREATMENT

DETAIL 36A

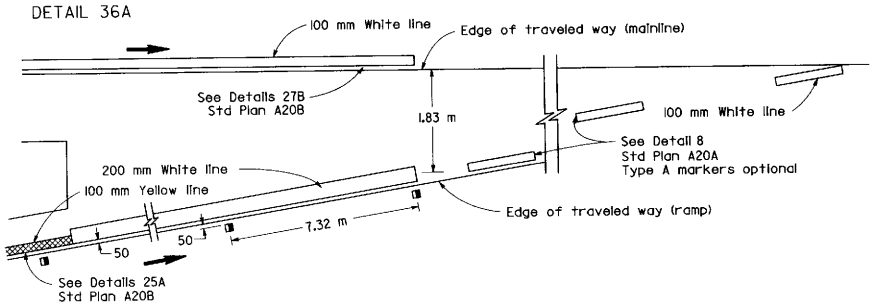

LANE DROP AT EXIT RAMPS

DETAIL 37

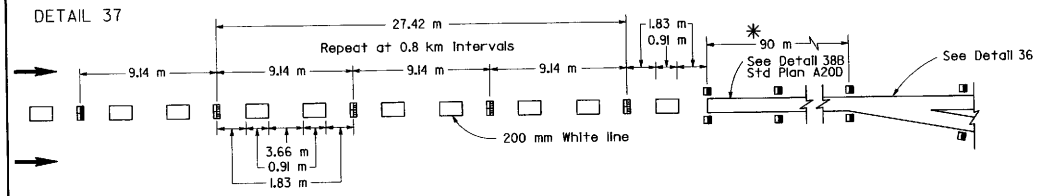

DETAIL 37A

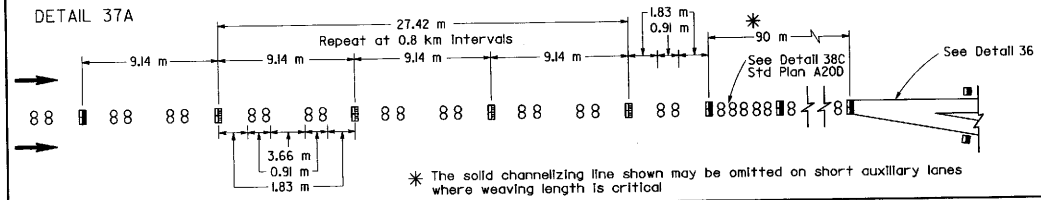

✳ The solid channelizing line shown may be omitted on short auxiliary lanes where weaving length is critical

LANE DROP AT INTERSECTIONS

DETAIL 37B

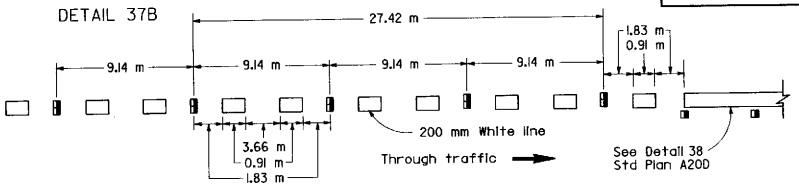

DETAIL 37C

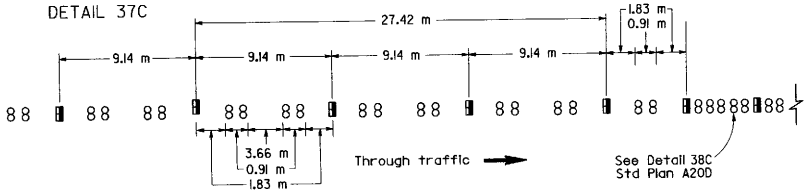

LEGEND

MARKERS

- ○ TYPE A White Non-reflective
- TYPE C Red-clear Reflective
- TYPE G One-way Clear Reflective
- ← Direction of Travel

MARKER DETAILS

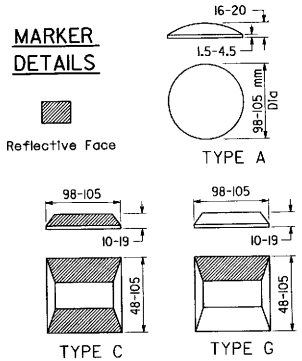

NOTES

1. Minimum projected area of reflective face = 65 square millimeters
2. Reflective markers need not be rectangular

STATE OF CALIFORNIA
DEPARTMENT OF TRANSPORTATION

PAVEMENT MARKERS AND TRAFFIC LINES TYPICAL DETAILS

NO SCALE

ALL DIMENSIONS ARE IN MILLIMETERS UNLESS OTHERWISE SHOWN

A20C

STD. PLAN A20C

Return to Table of Contents

CHANNELIZING LINE

DETAIL 38

DETIL 38A

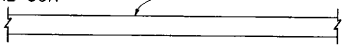

DETAIL 38B

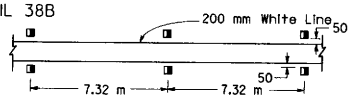

DETAIL 38C

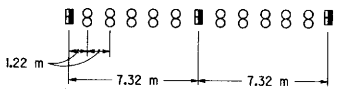

LEGEND

MARKERS

- TYPE A White Non-reflective
- TYPE G One-way Clear Reflective
- Direction of Travel

MARKER DETAILS

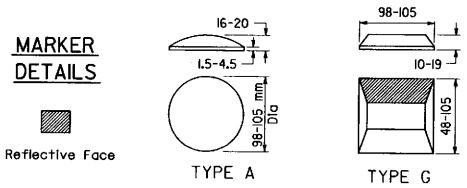

BIKE LANE LINE

DETAIL 39

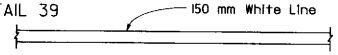

BIKE LANE Intersection Line

DETAIL 39A

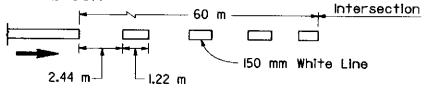

LANE LINE EXTENSIONS THROUGH INTERSECTIONS

DETAIL 40

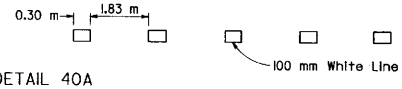

DETAIL 40A

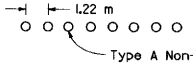

NOTES

1. Minimum projected area of reflective face = 65 square millimeters
2. Reflective markers need not be rectangular.
3. See typical traffic line details for marker patterns to be used with recessed pavement markers. Detail 14 requires a Type 2 recess.

RECESS DETAIL FOR REFLECTIVE PAVEMENT MARKER

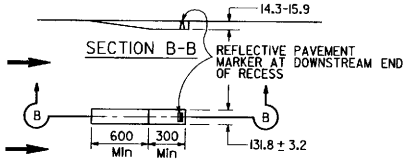

PLAN

ONE-WAY TRAFFIC
(TYPE 1)

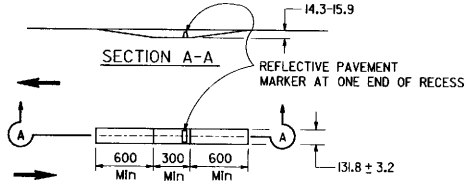

PLAN

TWO-WAY TRAFFIC
(TYPE 2)

REFLECTIVE PAVEMENT MARKER FOR RECESSED INSTALLATION

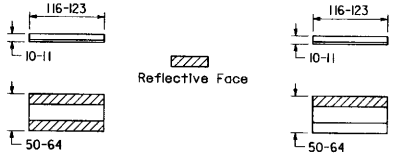

TYPE C & TYPE D TYPE G & TYPE H

See Note 3

DIST	COUNTY	ROUTE	KILOMETER POST TOTAL PROJECT	SHEET NO.	TOTAL SHEETS

REGISTERED CIVIL ENGINEER

July 1, 1997
PLANS APPROVAL DATE

REGISTERED PROFESSIONAL ENGINEER Gerry Mais No. C18915 Exp. 6-30-01 CIVIL STATE OF CALIFORNIA

The State of California or its officers or agents shall not be responsible for the accuracy or completeness of electronic copies of this plan sheet.

STATE OF CALIFORNIA
DEPARTMENT OF TRANSPORTATION

PAVEMENT MARKERS AND TRAFFIC LINES TYPICAL DETAILS

NO SCALE

ALL DIMENSIONS ARE IN MILLIMETERS UNLESS OTHERWISE SHOWN

A20D

STD. PLAN A20D

Return to Table of Contents

DIST	COUNTY	ROUTE	KILOMETER POST TOTAL PROJECT	SHEET NO.	TOTAL SHEETS

Caltrans Metric

REGISTERED CIVIL ENGINEER

July 1, 1997
PLANS APPROVAL DATE

REGISTERED PROFESSIONAL ENGINEER
Gerry Meis
No. C18915
Exp. 6-30-01
CIVIL
STATE OF CALIFORNIA

The State of California or its officers or agents shall not be responsible for the accuracy or completeness of electronic copies of this plan sheet.

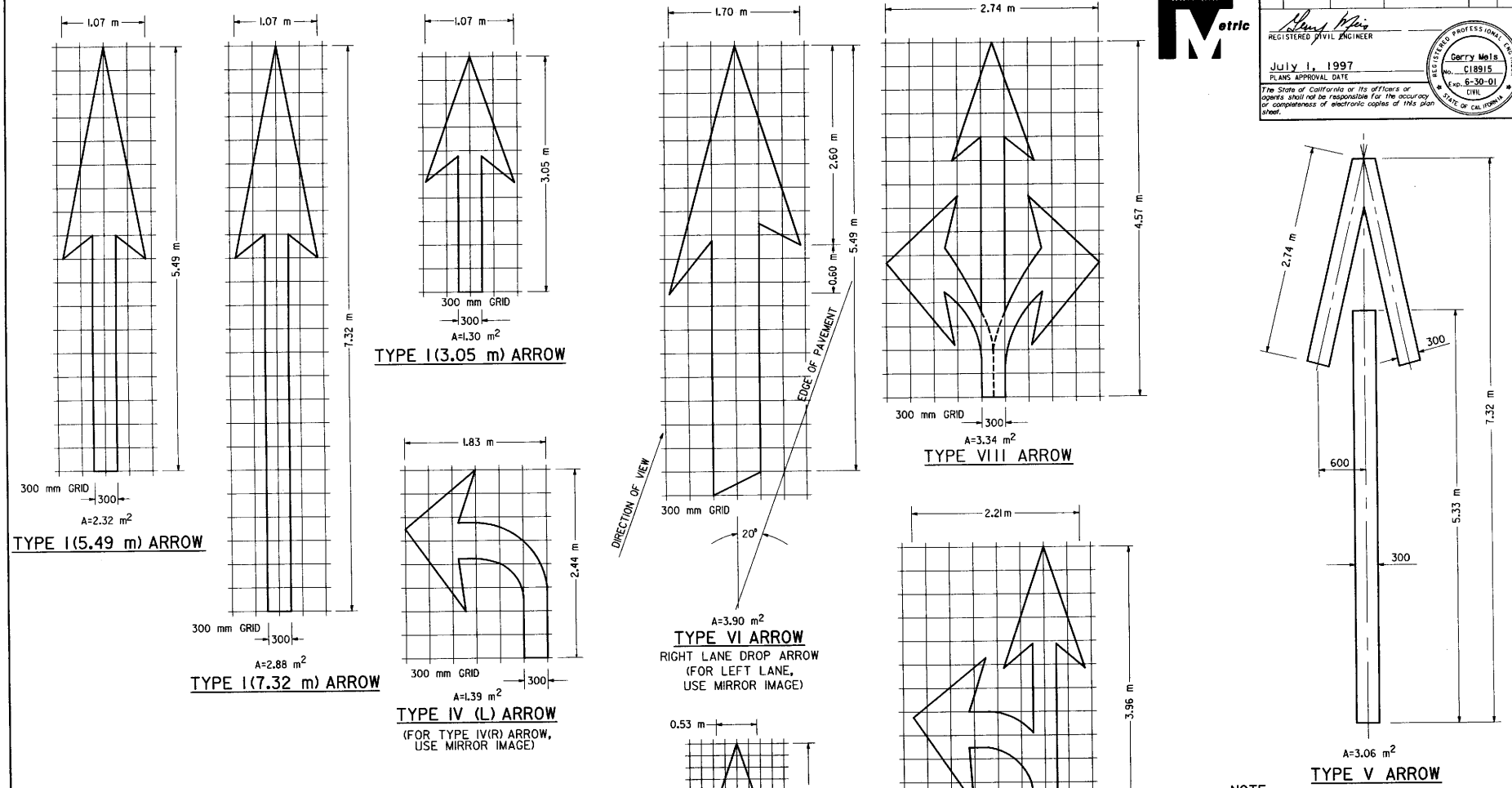

NOTE

MINOR VARIATIONS IN DIMENSIONS MAY BE ACCEPTED BY THE ENGINEER.

STATE OF CALIFORNIA
DEPARTMENT OF TRANSPORTATION

PAVEMENT MARKINGS ARROWS

NO SCALE

ALL DIMENSIONS ARE IN MILLIMETERS UNLESS OTHERWISE SHOWN

A24A

Return to Table of Contents

DIST	COUNTY	ROUTE	KILOMETER POST TOTAL PROJECT	SHEET NO.	TOTAL SHEETS

REGISTERED CIVIL ENGINEER

July 1, 1997
PLANS APPROVAL DATE

REGISTERED PROFESSIONAL ENGINEER
Gerry Weis
No. C18915
Exp. 6-30-01
CIVIL
STATE OF CALIFORNIA

The State of California or its officers or agents shall not be responsible for the accuracy or completeness of electronic copies of this plan sheet.

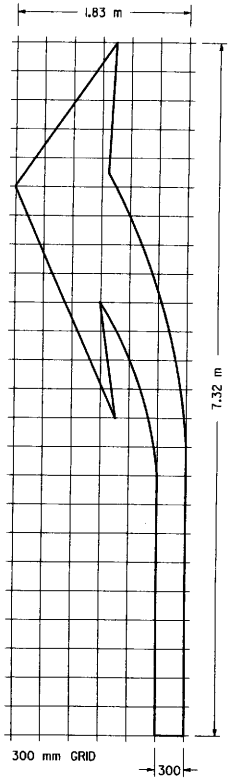

A=3.90 m²

TYPE III(L) ARROW
(FOR TYPE III(R) USE MIRROR IMAGE)

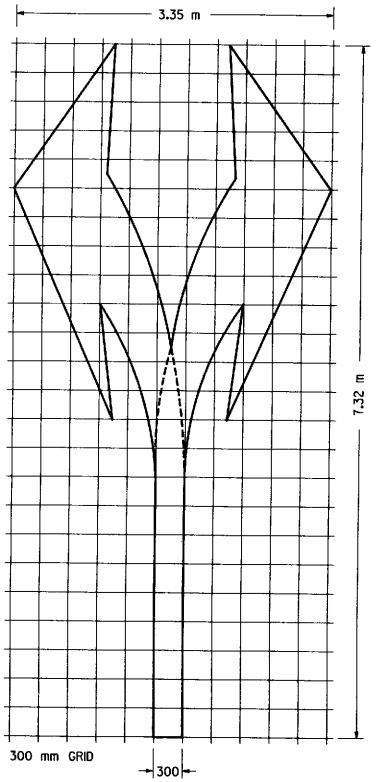

A=6.78 m²

TYPE III(B) ARROW

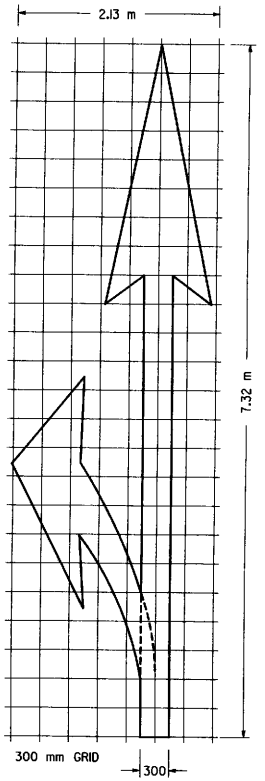

A=4.18 m²

TYPE II(L) ARROW
(FOR TYPE II(R) USE MIRROR IMAGE)

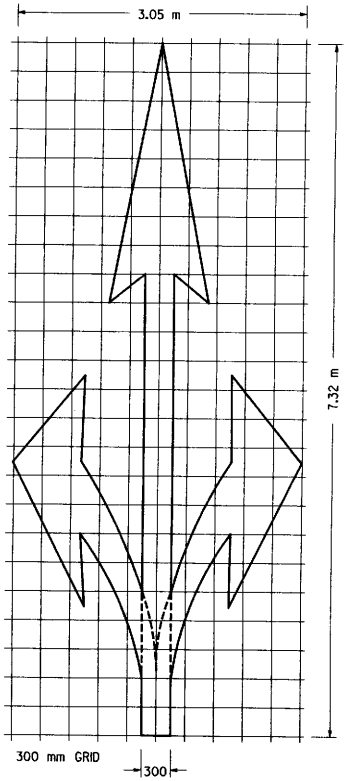

A=5.48 m²

TYPE II(B) ARROW

NOTE

MINOR VARIATIONS IN DIMENSIONS
MAY BE ACCEPTED BY THE ENGINEER.

STATE OF CALIFORNIA
DEPARTMENT OF TRANSPORTATION

PAVEMENT MARKINGS ARROWS

NO SCALE

ALL DIMENSIONS ARE IN
MILLIMETERS UNLESS OTHERWISE SHOWN

A24B

STD. PLAN A24B

Return to Table of Contents

DIST	COUNTY	ROUTE	KILOMETER POST TOTAL PROJECT	SHEET NO.	TOTAL SHEETS

Caltrans Metric

REGISTERED CIVIL ENGINEER

July 1, 1997
PLANS APPROVAL DATE

REGISTERED PROFESSIONAL ENGINEER
Gerry Meis
No. C18915
Exp. 6-30-01
CIVIL
STATE OF CALIFORNIA

The State of California or its officers or agents shall not be responsible for the accuracy or completeness of electronic copies of this plan sheet.

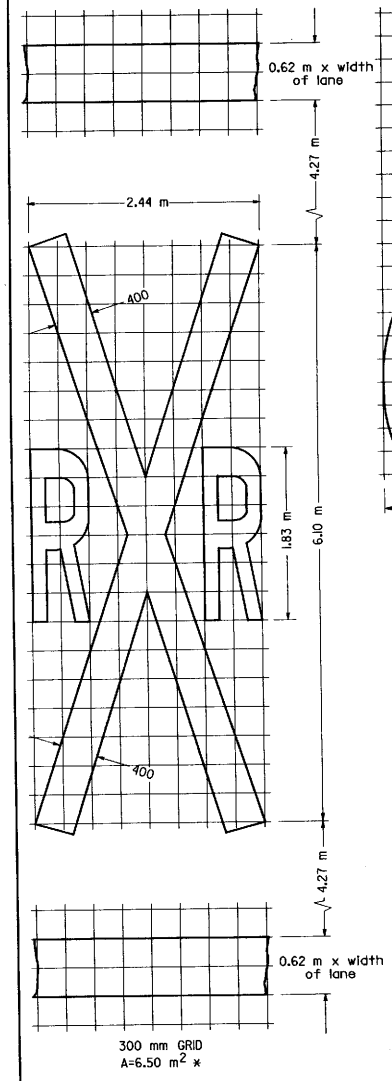

RAILROAD CROSSING SYMBOL

*6.5 m² DOES NOT INCLUDE THE 0.6 m x VARIABLE WIDTH TRANSVERSE LINES.

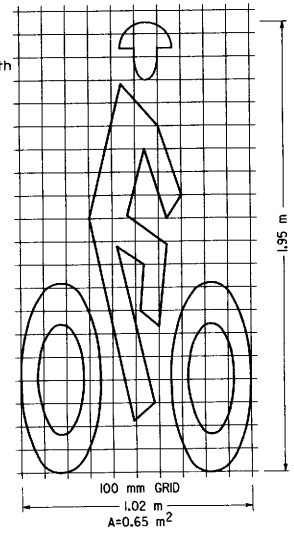

BIKE LANE SYMBOL

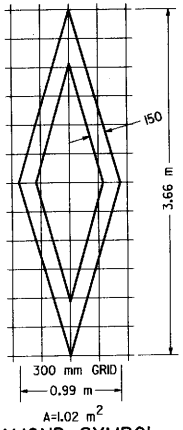

DIAMOND SYMBOL

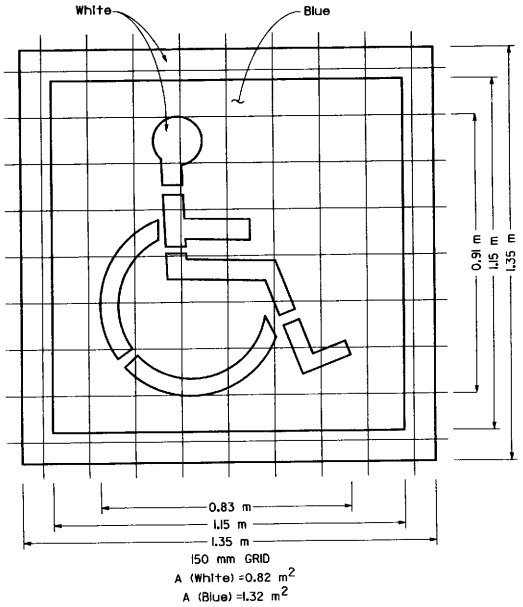

HANDICAPPED PARKING SYMBOL

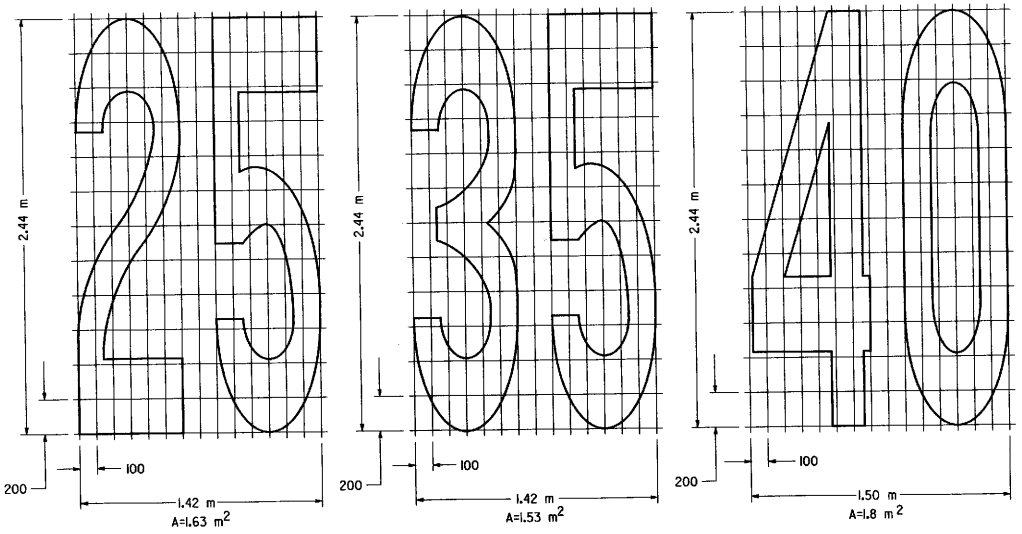

NUMERALS

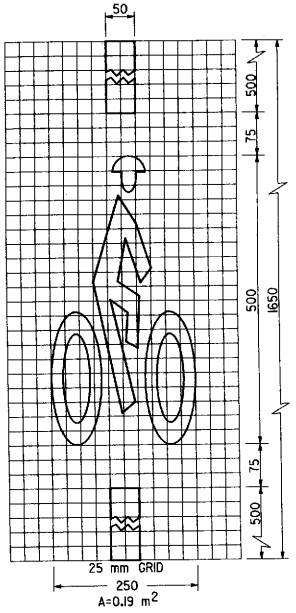

BICYCLE LOOP DETECTOR SYMBOL

NOTE

MINOR VARIATIONS IN DIMENSIONS MAY BE ACCEPTED BY THE ENGINEER.

STATE OF CALIFORNIA
DEPARTMENT OF TRANSPORTATION

PAVEMENT MARKINGS SYMBOLS AND NUMERALS

NO SCALE

ALL DIMENSIONS ARE IN MILLIMETERS UNLESS OTHERWISE SHOWN

A24C

Return to Table of Contents

DIST	COUNTY	ROUTE	KILOMETER POST TOTAL PROJECT	SHEET NO.	TOTAL SHEETS

REGISTERED CIVIL ENGINEER

July 1, 1997
PLANS APPROVAL DATE

REGISTERED PROFESSIONAL ENGINEER
Gerry Mels
No. C18915
Exp. 6-30-01
CIVIL
STATE OF CALIFORNIA

The State of California or its officers or agents shall not be responsible for the accuracy or completeness of electronic copies of this plan sheet.

Metric

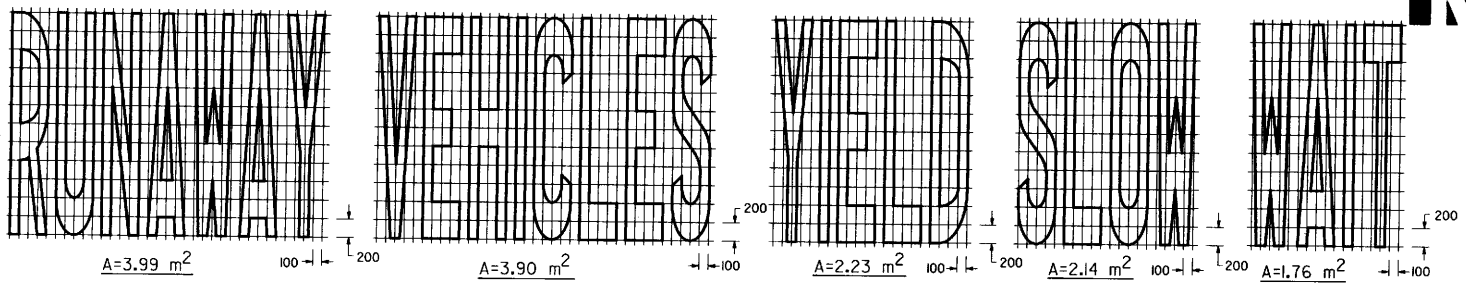

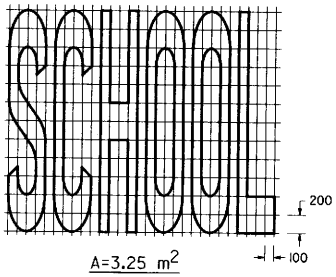

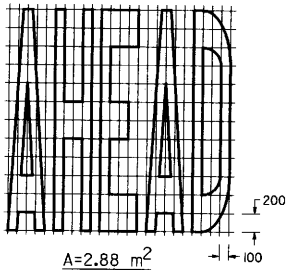

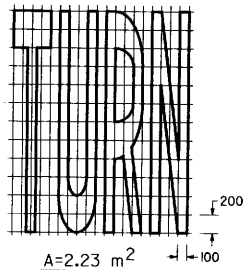

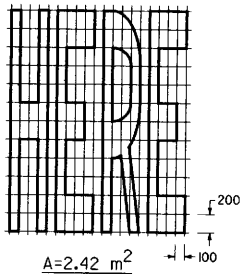

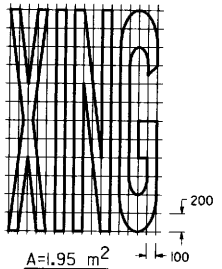

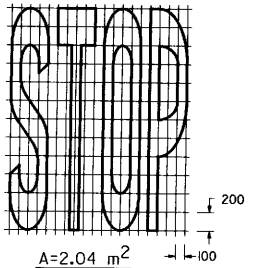

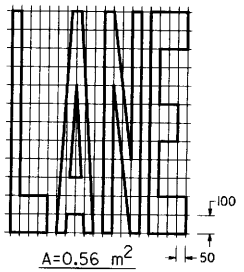

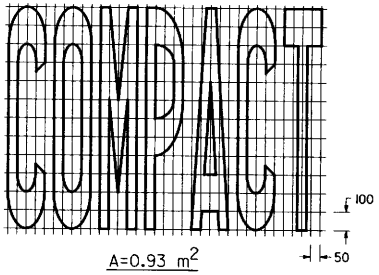

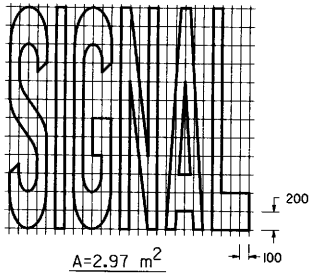

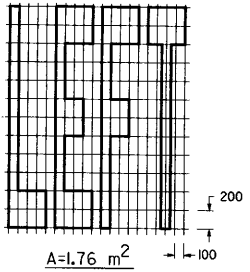

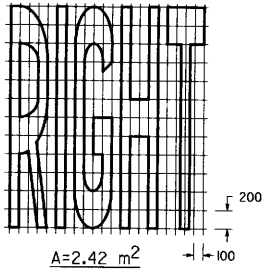

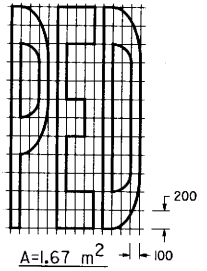

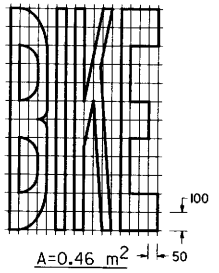

NOTES

(1) If a message consists of more than one word, it should read "UP", i.e., the first word should be nearest the driver.

(2) The space between words should be at least four times the height of the characters for low speed roads, but not more than ten times the height of the characters. The space may be reduced appropriately where there is limited space because of local conditions.

(3) Minor variations in dimensions may be accepted by the Engineer.

(4) Portions of a letter, number or symbol may be separated by connecting segments not to exceed 50 mm in width.

WORD MARKINGS

ITEM	m^2	ITEM	m^2	ITEM	m^2	ITEM	m^2
XING	1.95	YIELD	2.23	BIKE	0.46	PED	1.67
AHEAD	2.88	SCHOOL	3.25	SLOW	2.14	COMPACT	0.93
WAIT	1.76	SIGNAL	2.97	STOP	2.04	RUNAWAY	3.99
LANE	0.56	TURN	2.23	LEFT	1.76	VEHICLES	3.90
RIGHT	2.42	HERE	2.42				

STATE OF CALIFORNIA
DEPARTMENT OF TRANSPORTATION

PAVEMENT MARKINGS WORDS

NO SCALE

ALL DIMENSIONS ARE IN MILLIMETERS UNLESS OTHERWISE SHOWN

A24D

STD. PLAN A24D

Return to Table of Contents

DIST	COUNTY	ROUTE	KILOMETER POST TOTAL PROJECT	SHEET NO.	TOTAL SHEETS

Caltrans Metric

REGISTERED CIVIL ENGINEER

July 1, 1997
PLANS APPROVAL DATE

REGISTERED PROFESSIONAL ENGINEER
Gerry Weis
No. C18915
Exp. 6-30-01
CIVIL
STATE OF CALIFORNIA

The State of California or its officers or agents shall not be responsible for the accuracy or completeness of electronic copies of this plan sheet.

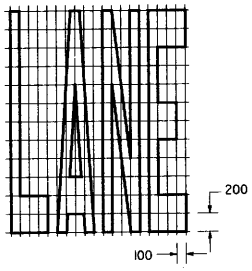

A=2.23 m²

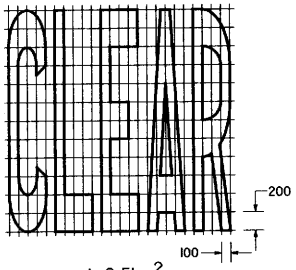

A=2.51 m²

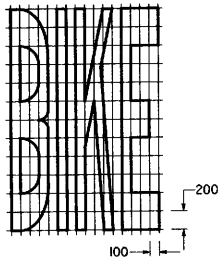

A=1.95 m²

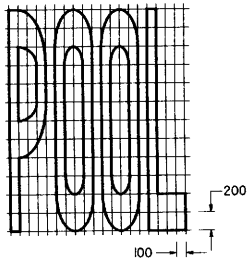

A=2.14 m²

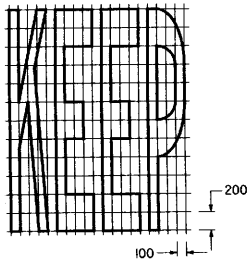

A=2.23 m²

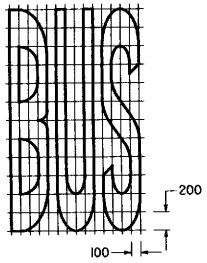

A=1.86 m²

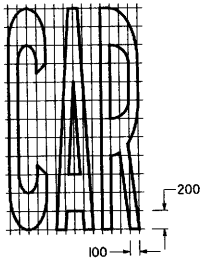

A=1.58 m²

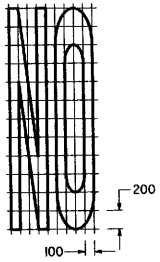

A=1.30 m²

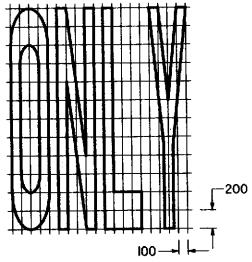

A=2.04 m²

CROSSWALK AND LIMIT LINE

See Note 5

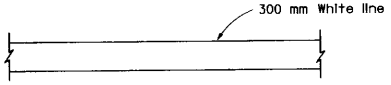

WORD MARKINGS			
ITEM	m2	ITEM	m2
LANE	2.23	NO	1.30
POOL	2.14	BIKE	1.95
CAR	1.58	BUS	1.86
CLEAR	2.51	ONLY	2.04
KEEP	2.23		

NOTES

(1) If a message consists of more than one word, it should read "UP", i.e., the first word should be nearest the driver.

(2) The space between words should be at least four times the height of the characters for low speed roads, but not more than ten times the height of the characters. The space may be reduced appropriately where there is limited space because of local conditions.

(3) Minor variations in dimensions may be accepted by the Engineer.

(4) Portions of a letter, number or symbol may be separated by connecting segments not to exceed 50 mm in width.

(5) Crosswalks contiguous to school grounds are to be 300 mm yellow lines in place of 300 mm white shown.

STATE OF CALIFORNIA
DEPARTMENT OF TRANSPORTATION

PAVEMENT MARKINGS WORDS AND CROSSWALKS

NO SCALE

ALL DIMENSIONS ARE IN MILLIMETERS UNLESS OTHERWISE SHOWN

A24E

STD. PLAN A24E

Return to Table of Contents

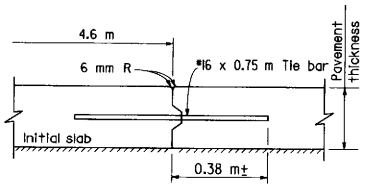

SECTION A-A

TRANSVERSE CONTACT JOINT WITH KEYWAY AND TIE BARS

See Note E

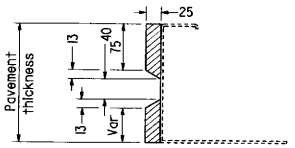

DETAIL OF METAL OR WOODEN INSERTS TO BE PLACED ON FORM

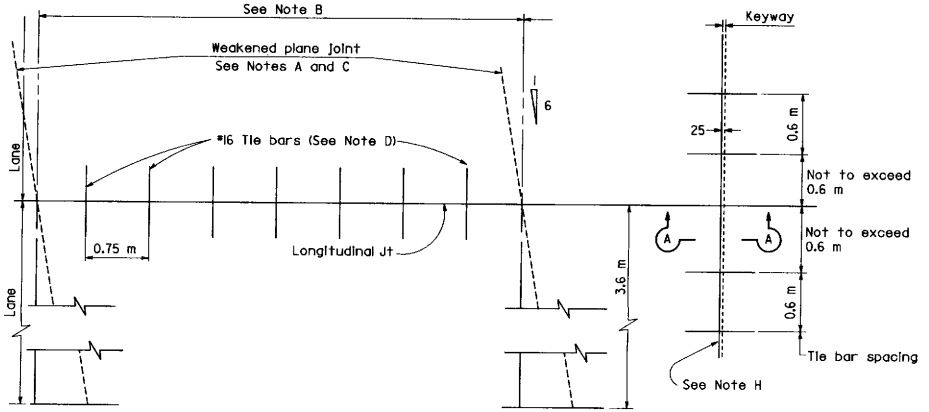

PLAN - PAVEMENT

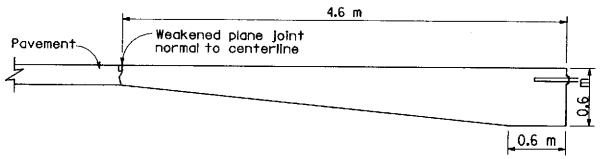

PAVEMENT END ANCHOR DETAIL

See Note F

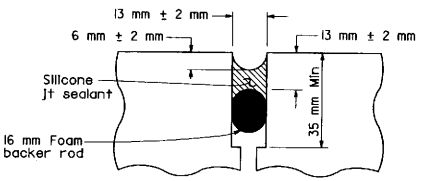

JOINT DETAIL

All transverse and longitudinal joints

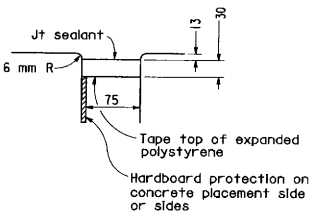

FORMED JOINT

DETAIL A

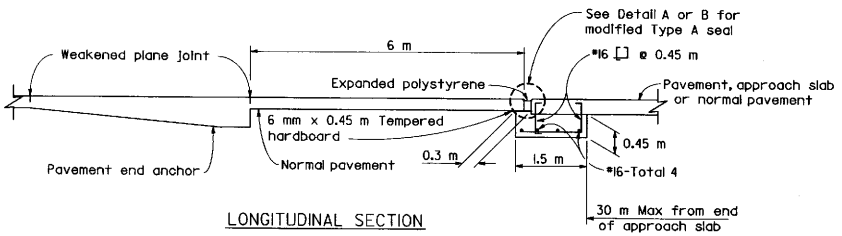

LONGITUDINAL SECTION

PAVEMENT PRESSURE RELIEF JOINT

See Note G

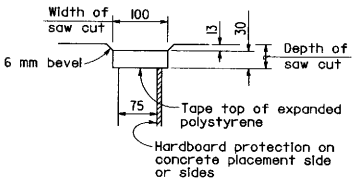

OPTIONAL SAW CUT

DETAIL B

DIST	COUNTY	ROUTE	KILOMETER POST TOTAL PROJECT	SHEET NO.	TOTAL SHEETS

Kevin M. Herritt
REGISTERED CIVIL ENGINEER

July 1, 1997
PLANS APPROVAL DATE

REGISTERED PROFESSIONAL ENGINEER Kevin M. Herritt No. C36577 Exp. 6-30-00 CIVIL STATE OF CALIFORNIA

The State of California or its officers or agents shall not be responsible for the accuracy or completeness of electronic copies of this plan sheet.

Caltrans Metric

NOTES

A. All weakened plane joints shall be constructed diagonally as shown, except as indicated in the end anchor and structure approach details.
When only one lane is being constructed alongside existing lanes, joints shall be constructed either diagonally or normal as directed by the Engineer. Offset = 1 in 6 and skewed counterclockwise.

B. Spacing of weakened plane joints shall be successively 3.6 m, 4.6 m, 4.0 m, 4.3 m and repeat, except for the first joint at pavement end anchors and at reinforced structure approaches.

C. Weakened plane joints shall be constructed at least 1.5 m from any transverse contact joint.

D. Install 0.75 m long deformed #16 Tie Bars on 0.75 m centers along all longitudinal adjoining PCC joints placed in the middle 1/3 depth of the slab.

E. Transverse contact joints with keyway and tie bars shall be used at all construction joints, and elsewhere if ordered by the Engineer. Tie bars to be placed in the middle 1/3 of the slab thickness.

F. Pavement end anchors shall be constructed as the terminal panels of all pavement not abutting existing pavement or structures, at pavement pressure relief joint, or elsewhere if ordered by the Engineer.

G. Pavement pressure relief joint to be used only when specified in the Special Provisions.

H. Transverse contact joint with keyway and tie bars shall be placed at least 1.5 m from the location of any weakened plane joint.

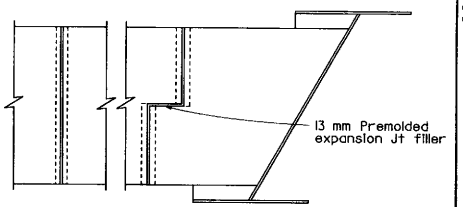

NORMAL JOINT STAGGERED JOINT

PLAN

Pavement pressure relief joints when placed at ends of approach slabs.

STATE OF CALIFORNIA
DEPARTMENT OF TRANSPORTATION

PORTLAND CEMENT CONCRETE PAVING DETAILS

NO SCALE

ALL DIMENSIONS ARE IN MILLIMETERS UNLESS OTHERWISE SHOWN

A35A

STD. PLAN A35A

Return to Table of Contents

DIST	COUNTY	ROUTE	KILOMETER POST TOTAL PROJECT	SHEET NO.	TOTAL SHEETS

Caltrans Metric

REGISTERED CIVIL ENGINEER

July 1, 1997
PLANS APPROVAL DATE

REGISTERED PROFESSIONAL ENGINEER
Craig A. Copelan
No. C36301
Exp. 6-30-00
CIVIL
STATE OF CALIFORNIA

The State of California or its officers or agents shall not be responsible for the accuracy or completeness of electronic copies of this plan sheet.

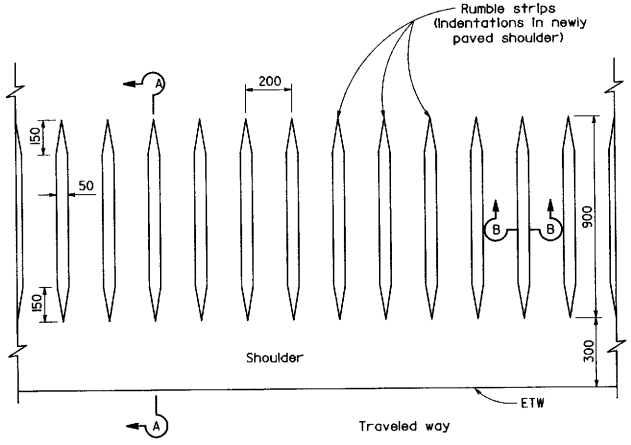

PLAN

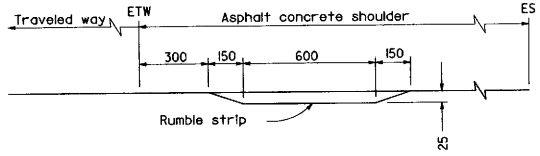

SECTION A-A

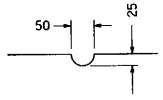

SECTION B-B

NOTE

Where bicycles are permitted, shoulder rumble strips should not be used unless approximately 1.5 meters of clear shoulder width for bicycle use is available between the rumble strips and the outer edge of the shoulder.

STATE OF CALIFORNIA
DEPARTMENT OF TRANSPORTATION

RUMBLE STRIP DETAILS

NO SCALE

ALL DIMENSIONS ARE IN MILLIMETERS UNLESS OTHERWISE SHOWN

A40

STD. PLAN A40

Return to Table of Contents

DIST	COUNTY	ROUTE	KILOMETER POST TOTAL PROJECT	SHEET NO.	TOTAL SHEETS

Paul Cotter
REGISTERED CIVIL ENGINEER

July 1, 1997
PLANS APPROVAL DATE

The State of California or its officers or agents shall not be responsible for the accuracy or completeness of electronic copies of this plan sheet.

REGISTERED PROFESSIONAL ENGINEER
Paul Cotter
No. 34509
Exp. 9-30-99
CIVIL
STATE OF CALIFORNIA

Metric

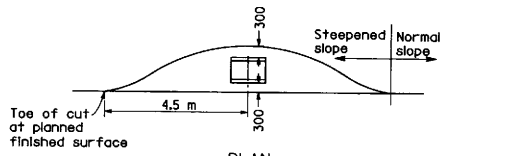

PLAN
See Note 2

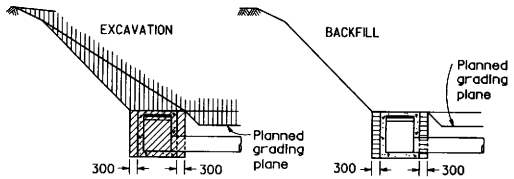

SECTION

RECESSES AT CULVERT INLETS

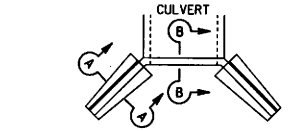

PLAN OF WING WALL

SECTION A - A

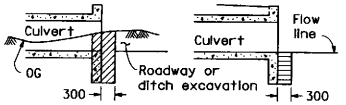

SECTION B - B

WING WALLS

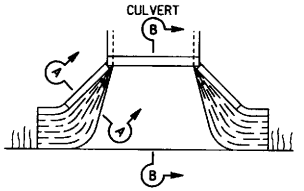

PLAN OF WARPED WING WALL

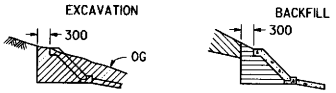

SECTION A - A

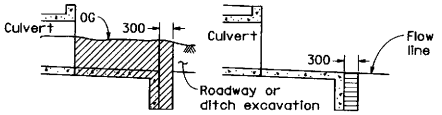

SECTION B - B

WARPED WING WALLS

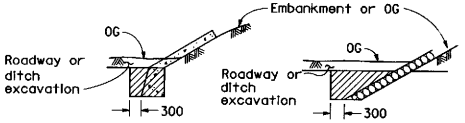

SLOPE PROTECTION
See Note 3

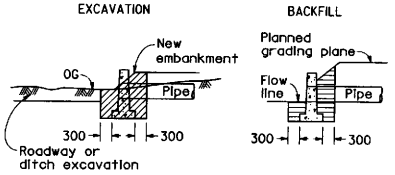

PIPE HEADWALLS

PAVED OR LINED DITCH

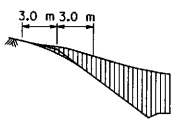

SLOPE ROUNDING

DIKE AND GUTTER

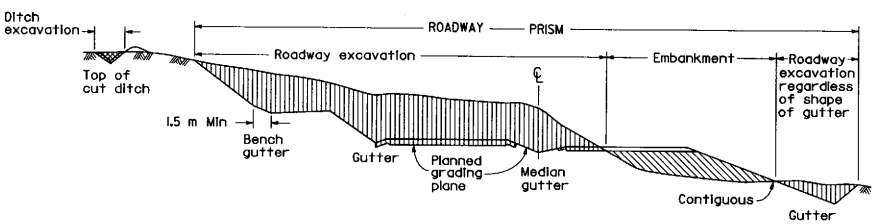

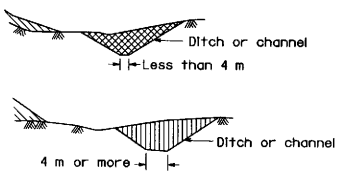

ROADWAY EXCAVATION - DITCH EXCAVATION

NOTES

1. This drawing indicates the work to be done and limits of payment for:
   - Roadway Excavation
   - Ditch Excavation
   - Structure Excavation for Slope Protection
2. Slopes and dimensions may vary to fit field conditions.
3. Top limit of structure excavation is original ground if ditch is not excavated.

LEGEND

- Structure Excavation
- Structure Backfill
- Ditch Excavation
- Slope Protection
- Roadway Excavation
- Roadway Embankment
- Original Ground

STATE OF CALIFORNIA
DEPARTMENT OF TRANSPORTATION

EXCAVATION AND BACKFILL MISCELLANEOUS DETAILS

NO SCALE

ALL DIMENSIONS ARE IN MILLIMETERS UNLESS OTHERWISE SHOWN

A62A

Return to Table of Contents

DIST	COUNTY	ROUTE	KILOMETER POST TOTAL PROJECT	SHEET NO.	TOTAL SHEETS

REGISTERED CIVIL ENGINEER

July 1, 1997
PLANS APPROVAL DATE

REGISTERED PROFESSIONAL ENGINEER James C. Moser No. C16576 Exp. 6-30-97 CIVIL STATE OF CALIFORNIA

The State of California or its officers or agents shall not be responsible for the accuracy or completeness of electronic copies of this plan sheet.

California Metric

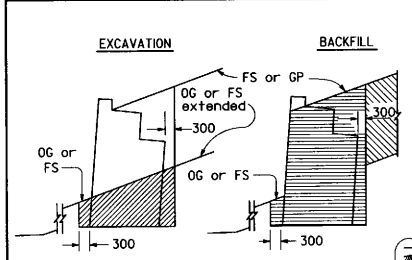

CRIB WALL, ON SLOPE

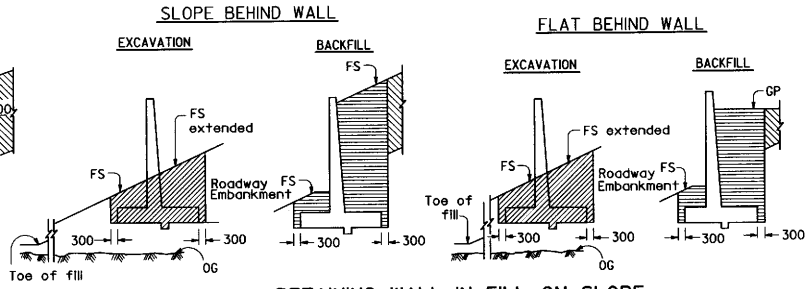

RETAINING WALL IN FILL, ON SLOPE

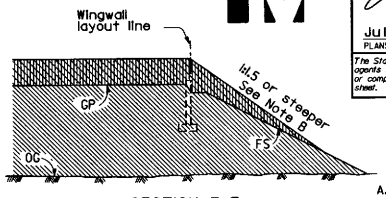

SECTION F-F

SURCHARGE NOTES

A. Bridge embankment surcharges to be placed at locations and to the heights listed in the special provisions.

B. Surcharge slopes to be as steep as stability of material permits.

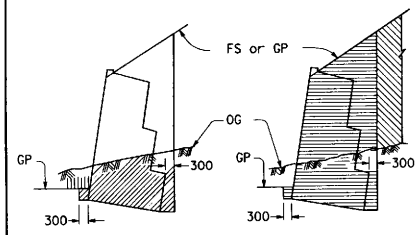

REINFORCED CONCRETE OR TIMBER CRIB WALL

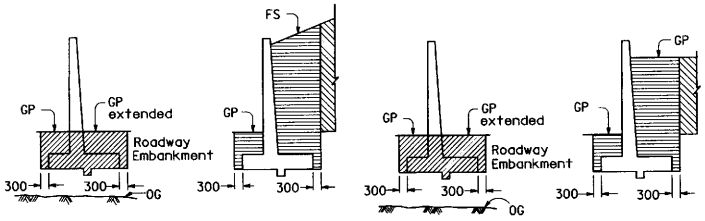

RETAINING WALL IN FILL

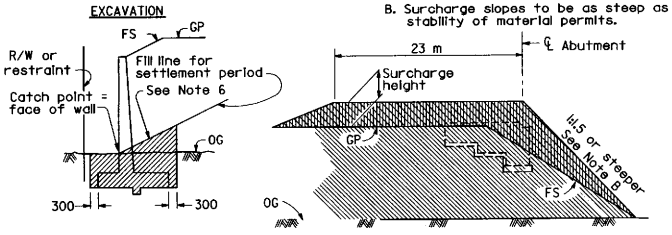

ELEVATION

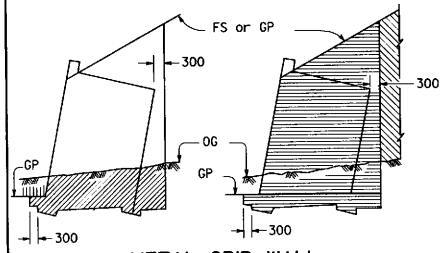

METAL CRIB WALL

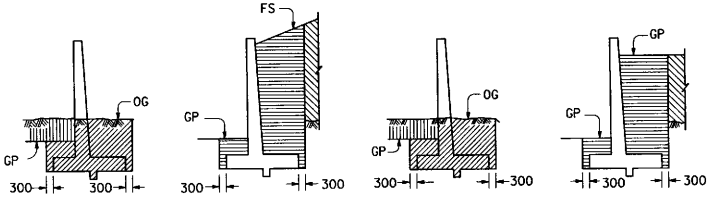

RETAINING WALL IN FILL & CUT

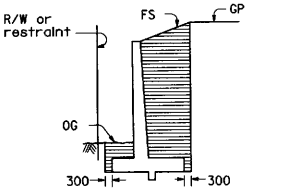

RETAINING WALL IN OG WITH SETTLEMENT PERIOD AND NEXT TO R/W LINE OR OTHER RESTRAINTS

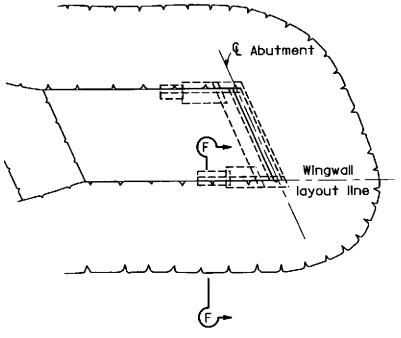

PLAN

BRIDGE EMBANKMENT SURCHARGE

NOTES

1. Roadway embankment is not delineated on excavation drawings for clarity.
2. Embankment, if any, must be in place before structure excavation is made.
3. If no roadway or ditch excavation or embankment is involved at the wall, structure excavation will be measured from the original ground.
4. No deduction for crib wall member volumes is made from structure backfill quantities.
5. When an embankment settlement period is required, the upper limits of structure excavation are raised to conform to the elevation of the embankment after the settlement period or, when an embankment surcharge is used to the finished surface and grading plane elevations.
6. Embankment slopes to be as steep as material permits. Slope assumed to be 1:1 for purposes of quantity calculations.

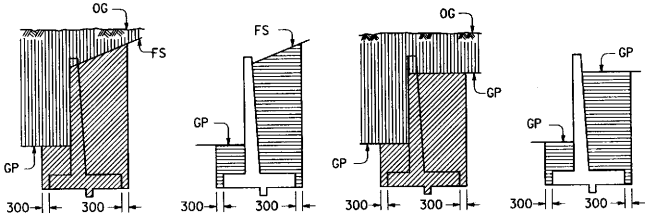

RETAINING WALL IN CUT

ABBREVIATIONS

OG - Original Ground
FS - Planned Finished Surface
GP - Planned Grading Plane

LEGEND

- Structure Excavation
- Structure Backfill
- Roadway Excavation
- Roadway Embankment
- Bridge Embankment Surcharge

STATE OF CALIFORNIA
DEPARTMENT OF TRANSPORTATION

LIMITS OF PAYMENT FOR EXCAVATION AND BACKFILL BRIDGE SURCHARGE AND WALL

NO SCALE

ALL DIMENSIONS ARE IN MILLIMETERS UNLESS OTHERWISE SHOWN

A62B

STD. PLAN A62B

Return to Table of Contents

DIST	COUNTY	ROUTE	KILOMETER POST TOTAL PROJECT	SHEET NO.	TOTAL SHEETS

REGISTERED CIVIL ENGINEER

July 1, 1997
PLANS APPROVAL DATE

The State of California or its officers or agents shall not be responsible for the accuracy or completeness of electronic copies of this plan sheet.

REGISTERED PROFESSIONAL ENGINEER James C. Moore No. C16576 Exp. 6-30-97 CIVIL STATE OF CALIFORNIA

Caltrans Metric

IN FILL

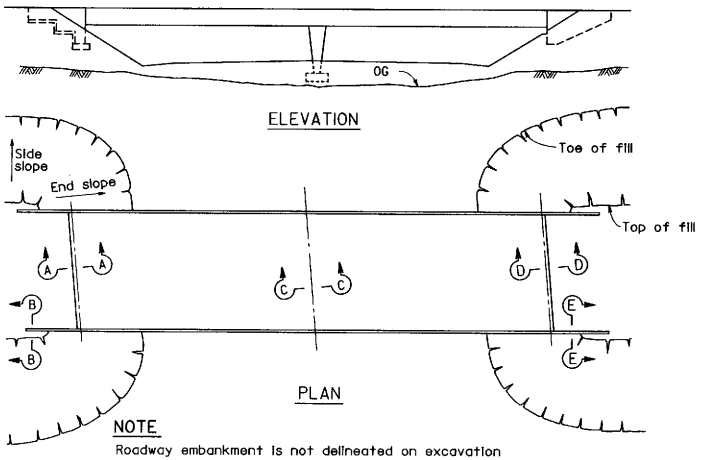

NOTE

Roadway embankment is not delineated on excavation drawings for clarity. Embankment must be in place before structure excavation is made.

IN CUT

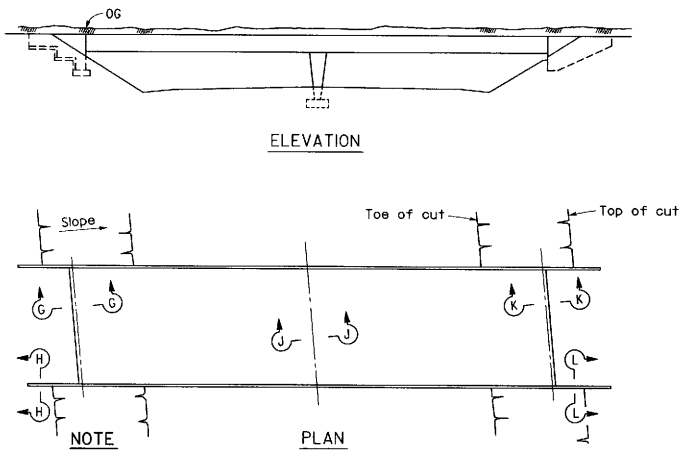

NOTE

If no roadway excavation is involved at bridge, structure excavation is measured from original ground.

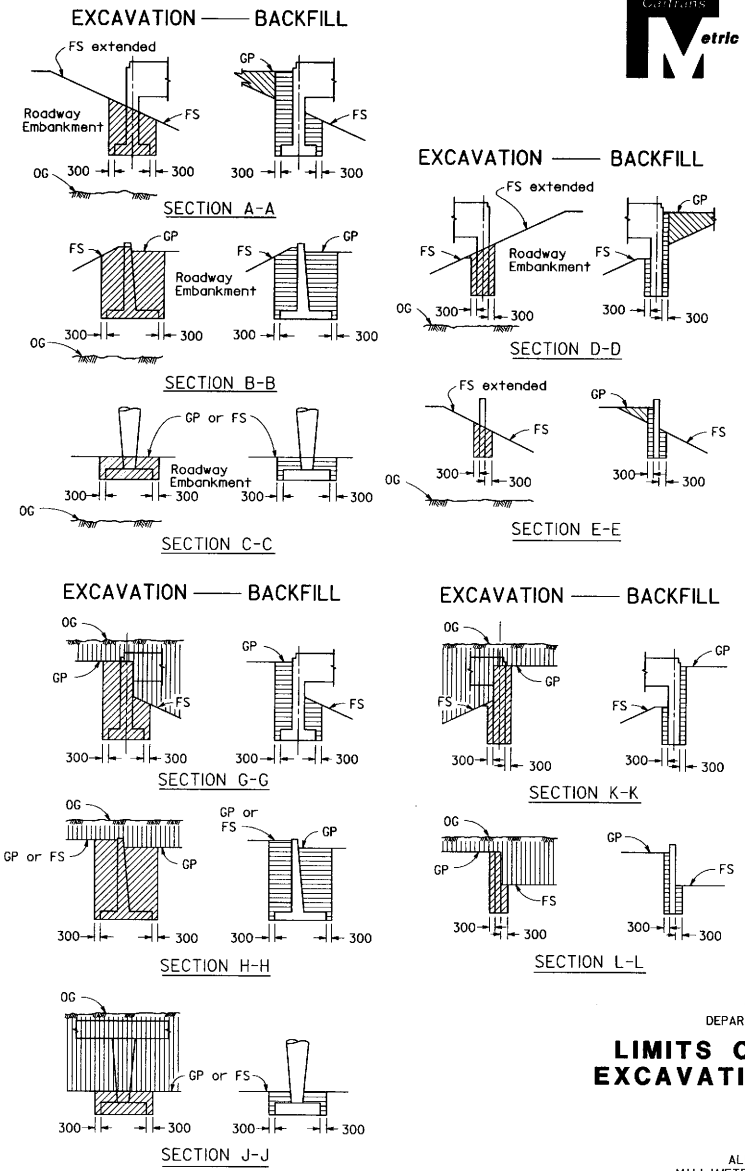

ABBREVIATIONS

OG	Original Ground
FS	Planned Finished Surface
GP	Planned Grading Plane

LEGEND

- Structure Excavation
- Structure Backfill
- Roadway Excavation
- Roadway Embankment

STATE OF CALIFORNIA
DEPARTMENT OF TRANSPORTATION

LIMITS OF PAYMENT FOR EXCAVATION AND BACKFILL BRIDGE

NO SCALE

ALL DIMENSIONS ARE IN MILLIMETERS UNLESS OTHERWISE SHOWN

A62C

STD. PLAN A62C

Return to Table of Contents

DIST	COUNTY	ROUTE	KILOMETER POST TOTAL PROJECT	SHEET NO.	TOTAL SHEETS

Caltrans Metric

Paul Cotter
REGISTERED CIVIL ENGINEER

July 1, 1997
PLANS APPROVAL DATE

REGISTERED PROFESSIONAL ENGINEER Paul Cotter No. 34509 Exp. 9-30-99 CIVIL STATE OF CALIFORNIA

The State of California or its officers or agents shall not be responsible for the accuracy or completeness of electronic copies of this plan sheet.

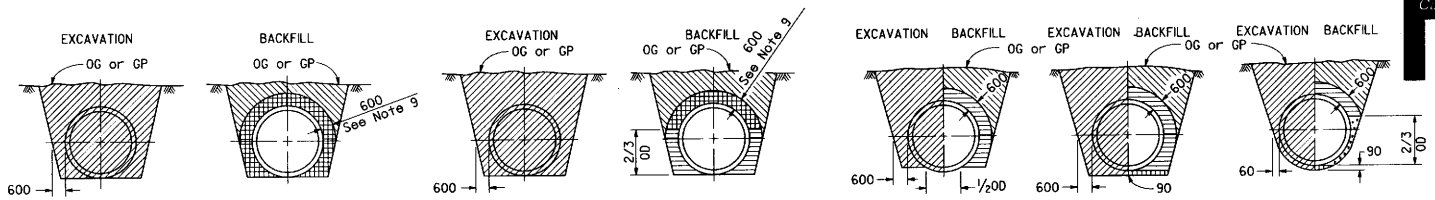

IN TRENCH

IN TRENCH

IN TRENCH

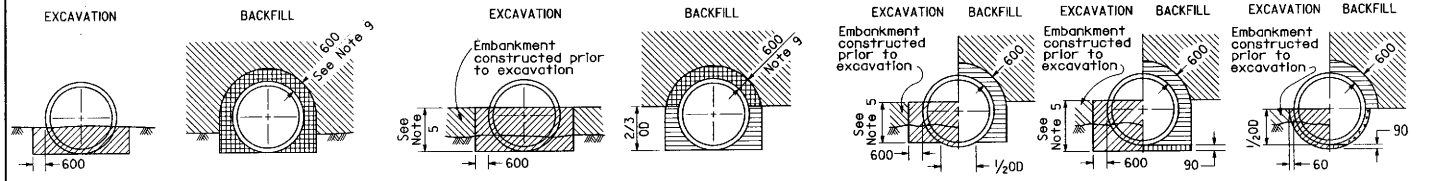

IN EMBANKMENT

IN EMBANKMENT

IN EMBANKMENT

MINIMUM ALLOWABLE CLASSES OF RCP FOR METHOD 1

Cover (in meters)	Minimum Class & D-Load
Less than 1.8	Class II 50D
1.8 - 2.4	Class III 65D
2.5 - 3.0	Class III Special 80D
3.1 - 3.6	Class IV 100D
3.7 - 4.2	Class IV Special 120D
4.3 - 5.1	Class V 140D
5.2 - 6.0	Class V Special 170D

See Notes 6 and 9

METHOD 1

MINIMUM ALLOWABLE CLASSES OF RCP FOR METHOD 2

Cover (in meters)	Minimum Class & D-Load
Less than 4.8	Class II 50D
4.9 - 6.0	Class III 65D
6.1 - 7.5	Class III Special 80D
7.6 - 8.5	Class IV 100D
8.6 - 10.6	Class IV Special 120D
10.7 - 12.8	Class V 140D
12.9 - 15.0	Class V Special 170D

See Notes 8 and 9

METHOD 2

REINFORCED CONCRETE PIPE

See Notes 1, 2, 7 and 10

MINIMUM ALLOWABLE CLASSES OF RCP FOR METHOD 3

Cover (in meters)	Minimum Class & D-Load
Less than 7.9	Class II 50D
8.0 - 9.7	Class III 65D
9.8 - 11.5	Class III Special 80D
11.6 - 13.7	Class IV 100D
13.8 - 17.0	Class IV Special 120D
17.1 - 20.7	Class V 140D
20.8 - 24.0	Class V Special 170D

METHOD 3

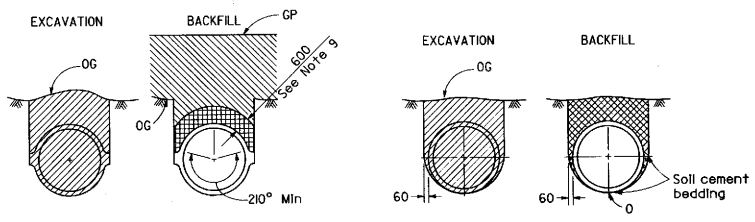

IN TRENCH ONLY

CAST-IN-PLACE

IN TRENCH ONLY

PRECAST

See Note 7

NON-REINFORCED CONCRETE PIPE

LEGEND

- Structure Excavation (Culvert)
- Structure Backfill (Culvert) 95% relative compaction
- Structure Backfill (Culvert) 90% relative compaction
- Loose Backfill
- Sand Bedding
- Soil Cement Bedding
- Roadway Embankment
- Original Ground

OD = Outside diameter for circular pipes and maximum vertical dimension for other shapes

ID = Inside diameter for circular pipes and minimum vertical dimension for other shapes

RCP = Reinforced concrete pipe

NOTES

1. Unless otherwise shown on the plans or specified in the special provision, the Contractor shall have the option of selecting the class of RCP and the method of backfill to be used, provided the height of cover does not exceed the value shown for the RCP selected.
   Example:
   600 mm RCP culvert with maximum cover of 5.8 m the options are:
   a) Class V Special or stronger with Method 1.
   b) Class III or stronger with Method 2.
   c) Class II or stronger with Method 3.
   Cover is defined as the maximum vertical distance from top of pipe to finished grade within the length of any given culvert.
2. The class of RCP, method of backfill and bedding selected shall be the same throughout the length of any given culvert.
3. The "length of any culvert" is defined as the culvert between:
   a. Successive drainage structures (inlets, junction boxes, headwalls, etc.)
   b. A drainage structure and the inlet or outlet end of the culvert, or
   c. The inlet and outlet end of the culvert when there are no intervening drainage structures.
4. Slope or shore excavation sides as necessary.
5. Embankment height prior to excavation for installation of all classes of RCP under Methods 2, 3A and 3B shall be as follows:
   Pipe sizes 300 mm to 1050 mm ID = 750 mm
   Pipe sizes 1200 mm to 2100 mm ID = 2/3 OD
   Pipe sizes larger than 2100 mm ID = 1500 mm
6. The maximum size for all classes of RCP placed under Method 1 is 1950 mm ID.
7. Non-reinforced precast pipe sizes 900 mm or smaller may also be placed under Methods 1, 2 or 3.
8. Oval or arch shaped RCP shall be placed under Method 2 only.
9. Embankment compaction requirements govern over the 90% relative compaction backfill requirement within 750 mm of finished grade.
10. Backfill shall be placed full width of excavation except where dimensions are shown for backfill width or thickness. Dimensions shown are minimums.
11. Cover over top of pipe at edge of traveled way shall be 600 mm for AC pavement and 300 mm for PCC pavement.

STATE OF CALIFORNIA
DEPARTMENT OF TRANSPORTATION

EXCAVATION AND BACKFILL CONCRETE PIPE CULVERTS

NO SCALE

ALL DIMENSIONS ARE IN MILLIMETERS UNLESS OTHERWISE SHOWN

A62D

STD. PLAN A62D

Return to Table of Contents

DIST	COUNTY	ROUTE	KILOMETER POST TOTAL PROJECT	SHEET NO.	TOTAL SHEETS

Caltrans Metric

Paul Cotter
REGISTERED CIVIL ENGINEER

July 1, 1997
PLANS APPROVAL DATE

REGISTERED PROFESSIONAL ENGINEER
Paul Cotter
No. 34509
Exp. 9-30-99
CIVIL
STATE OF CALIFORNIA

The State of California or its officers or agents shall not be responsible for the accuracy or completeness of electronic copies of this plan sheet.

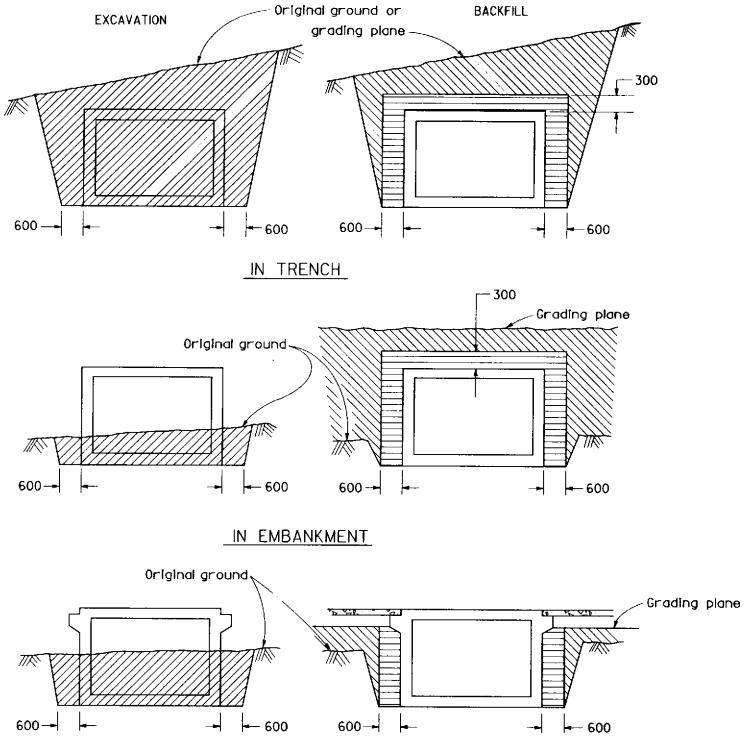

REINFORCED CONCRETE BOX CULVERT

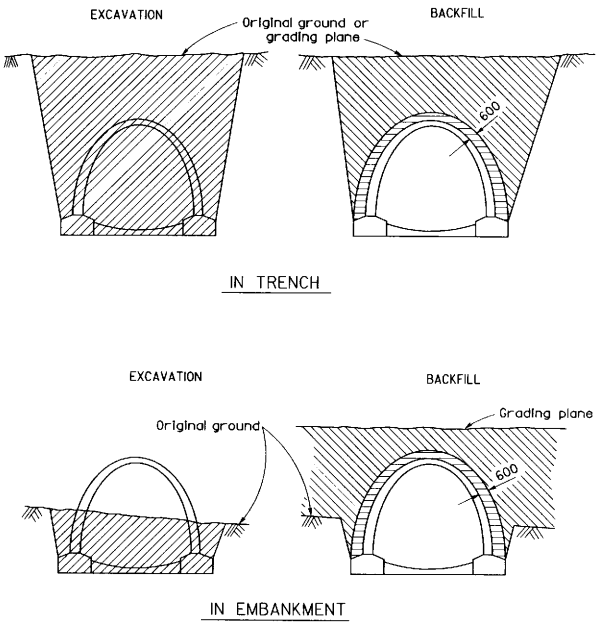

REINFORCED CONCRETE ARCH CULVERT

NOTES

1. Slope or shore excavation sides as necessary.
2. Dimensions shown are minimum.

LEGEND

- Structure Excavation (Culvert)
- Structure Backfill (Culvert) 95% relative compaction
- Roadway Embankment
- Original Ground

STATE OF CALIFORNIA
DEPARTMENT OF TRANSPORTATION

EVCAVATION AND BACKFILL CAST-IN-PLACE REINFORCED CONCRETE BOX AND ARCH CULVERTS

NO SCALE

ALL DIMENSIONS ARE IN MILLIMETERS UNLESS OTHERWISE SHOWN

A62E

STD. PLAN A62E

Return to Table of Contents

DIST	COUNTY	ROUTE	KILOMETER POST TOTAL PROJECT	SHEET NO.	TOTAL SHEETS

Paul Cotter
REGISTERED CIVIL ENGINEER

July 1, 1997
PLANS APPROVAL DATE

REGISTERED PROFESSIONAL ENGINEER Paul Cotter No. 34509 Exp. 9-30-99 CIVIL STATE OF CALIFORNIA

The State of California or its officers or agents shall not be responsible for the accuracy or completeness of electronic copies of this plan sheet.

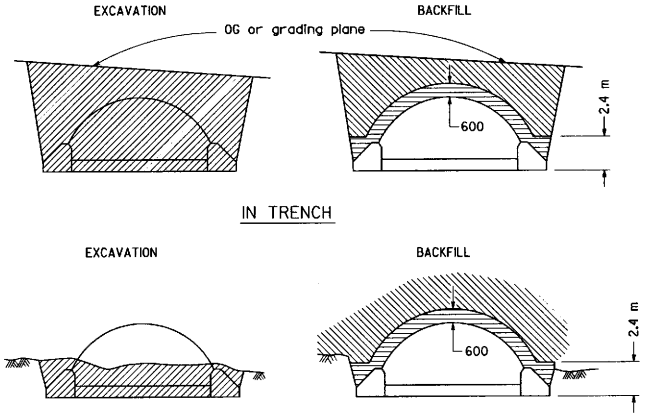

STRUCTURAL STEEL PLATE ARCHES

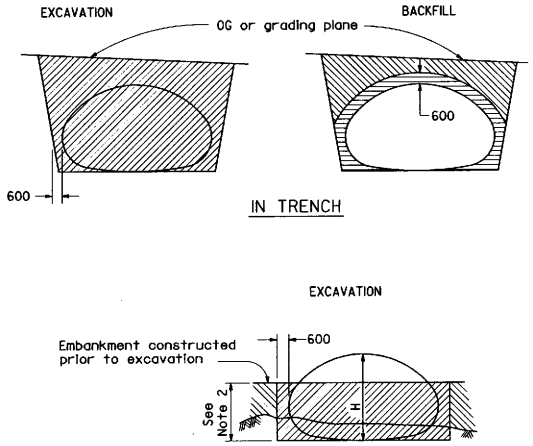

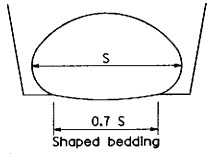

SHAPED BEDDING
S = Larger than 2100 mm

STRUCTURAL STEEL PLATE PIPE ARCHES AND VEHICULAR UNDERCROSSING

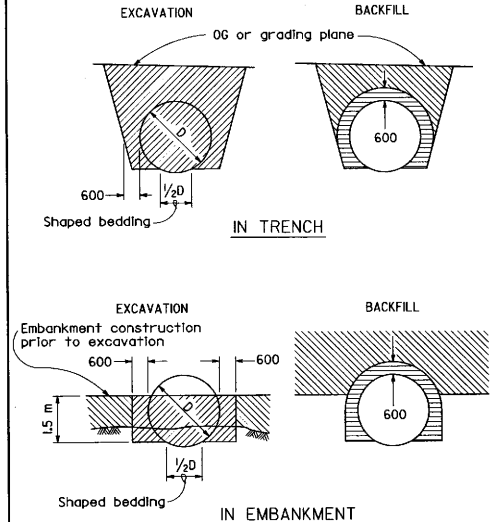

PIPES
Larger than 2100 mm

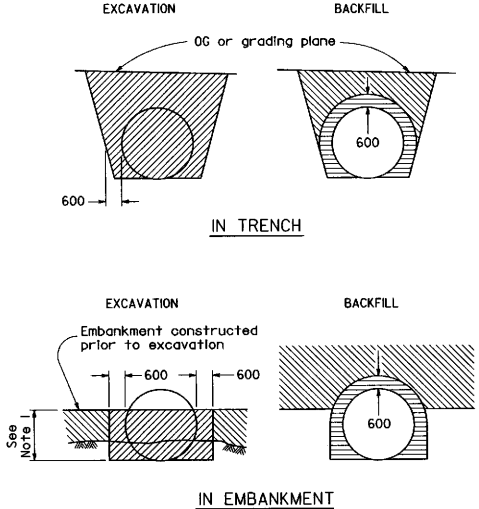

METAL AND PLASTIC PIPES AND CORRUGATED METAL PIPE ARCHES
2100 mm or Smaller

NOTES

1. PIPES: 750 mm minimum for diameters up to and including 1050 mm then 2/3 diameter but no more than 1500 mm required. CORRUGATED METAL PIPE ARCHES: 750 mm maximum.
2. 2/3 H up to 1500 mm maximum.
3. Slope or shore excavation sides as necessary.
4. Backfill shall be placed full width of excavation except as noted.
5. Diagrams do not apply to overside drains.
6. Dimensions shown are minimum.
7. For strutting requirement of structural steel plate pipe, arches and vehicular undercrossing during construction, see Standard Plan D88A.

LEGEND

- Structure Excavation (Culvert)
- Roadway Embankment
- Structure Backfill (Culvert) 95% Relative Compaction
- Original ground

STATE OF CALIFORNIA
DEPARTMENT OF TRANSPORTATION

EXCAVATION AND BACKFILL METAL AND PLASTIC CULVERTS

NO SCALE

ALL DIMENSIONS ARE IN MILLIMETERS UNLESS OTHERWISE SHOWN

A62F

STD. PLAN A62F

Return to Table of Contents

DIST	COUNTY	ROUTE	KILOMETER POST TOTAL PROJECT	SHEET NO.	TOTAL SHEETS

REGISTERED CIVIL ENGINEER

July 1, 1997
PLANS APPROVAL DATE

REGISTERED PROFESSIONAL ENGINEER Gerry Mels No. C18915 Exp. 6-30-01 CIVIL STATE OF CALIFORNIA

The State of California or its officers or agents shall not be responsible for the accuracy or completeness of electronic copies of this plan sheet.

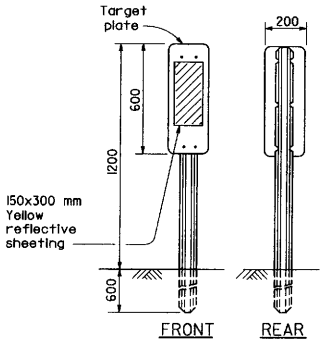

TYPE L-1
See Note 1

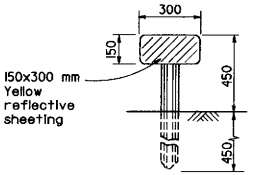

TYPE K-1
See Note 2

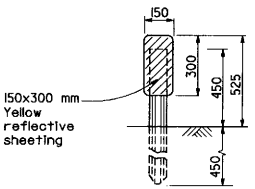

TYPE K-2
See Note 2

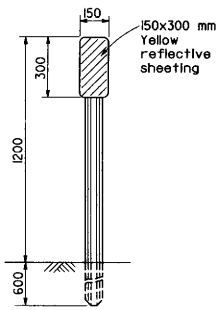

TYPE L-2
See Note 1

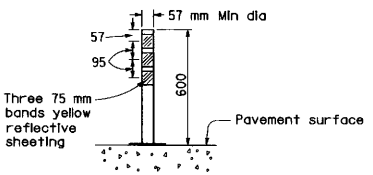

TYPE K-4
(Round flexible post surface mount)

NOTE

1. See Standard Plan A73B for metal post details and additional markers.
2. Posts for Type K-1 and K-2 object markers may either be metal or flexible, as shown on the project plans.

STATE OF CALIFORNIA
DEPARTMENT OF TRANSPORTATION

OBJECT MARKERS

NO SCALE

ALL DIMENSIONS ARE IN MILLIMETERS UNLESS OTHERWISE SHOWN

A73A

STD. PLAN A73A

Return to Table of Contents

DIST	COUNTY	ROUTE	KILOMETER POST TOTAL PROJECT	SHEET NO.	TOTAL SHEETS

REGISTERED CIVIL ENGINEER

July 1, 1997
PLANS APPROVAL DATE

REGISTERED PROFESSIONAL ENGINEER Gerry Weis No. C18915 Exp. 6-30-01 CIVIL STATE OF CALIFORNIA

The State of California or its officers or agents shall not be responsible for the accuracy or completeness of electronic copies of this plan sheet.

Caltrans Metric

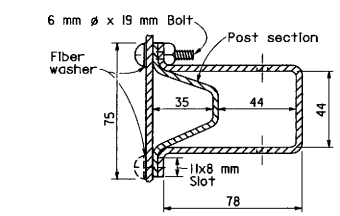

TOP VIEW

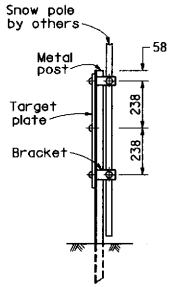

POST SIDE VIEW

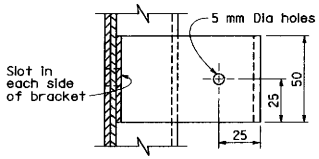

Bracket to be 0.31x50 mm mild steel galvanized after fabrication

SIDE VIEW

SNOW POLE BRACKET

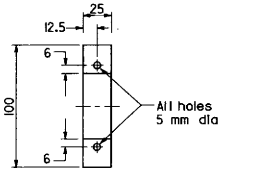

RT SIDE VIEW

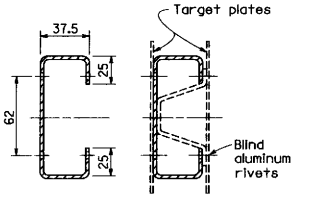

TOP VIEW

Material:
Aluminum 1.25 mm thick
(3003-H14 Alloy)

TWO PLATE POST MOUNT

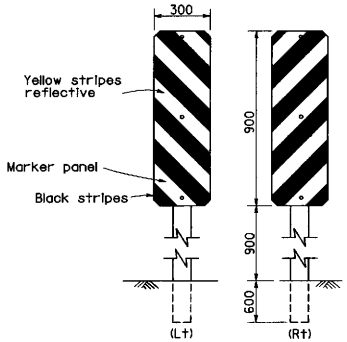

TYPE P

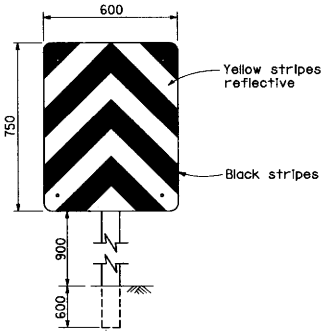

TYPE R

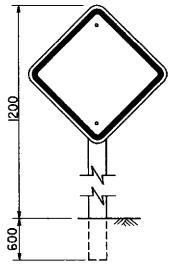

TYPE N-1,N-2,N-3

N-1. Yellow reflective background with black border.
N-2. Red reflective background with black border.
N-3. Orange reflective background with black border.

OBJECT MARKERS

NOTES

1. See Standard Plan A73A for additional object markers.
2. Type P and R markers shall have orange and white reflectorized stripes in construction zones.

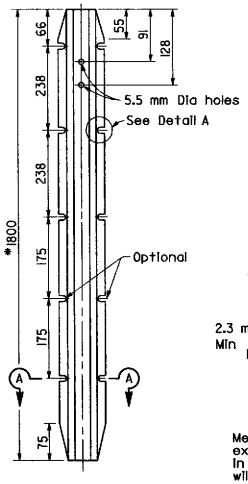

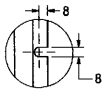

DETAIL A

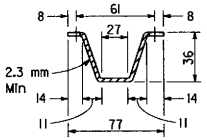

SECTION A-A

Metal post to be as shown except that minor variations in design and dimensions will be permitted to meet manufacturer's standards

*2400 mm for Type P object marker and 900 mm for Type K object marker

METAL POST DETAIL

White target plate with black Series D numerals and letters XX- Kilometer Post equation BK or AH when directed by the Engineer.

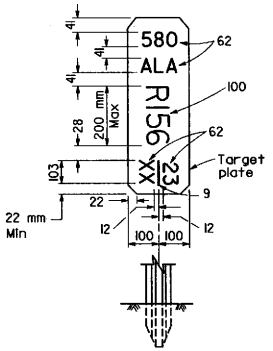

FRONT

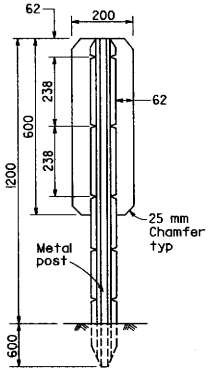

REAR

KILOMETER POST MARKER

STATE OF CALIFORNIA
DEPARTMENT OF TRANSPORTATION

MARKERS

NO SCALE

ALL DIMENSIONS ARE IN MILLIMETERS UNLESS OTHERWISE SHOWN

A73B

STD. PLAN A73B

Return to Table of Contents

DIST	COUNTY	ROUTE	KILOMETER POST TOTAL PROJECT	SHEET NO.	TOTAL SHEETS

REGISTERED CIVIL ENGINEER

July 1, 1997
PLANS APPROVAL DATE

REGISTERED PROFESSIONAL ENGINEER Gerry Mels No. C18915 Exp. 6-30-01 CIVIL STATE OF CALIFORNIA

The State of California or its officers or agents shall not be responsible for the accuracy or completeness of electronic copies of this plan sheet.

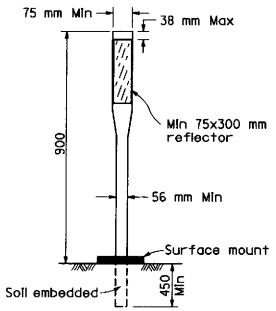

CHANNELIZERS

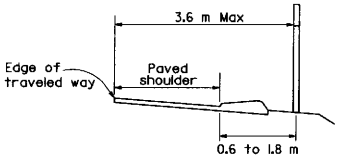

DELINEATOR POSITIONING

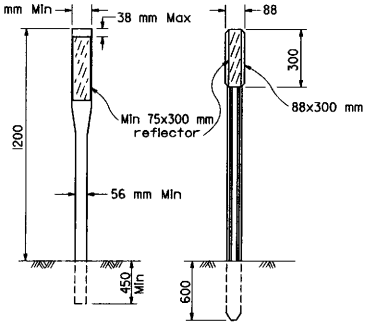

CLASS 1 FLEXIBLE POST

CLASS 2 METAL POST

DELINEATORS

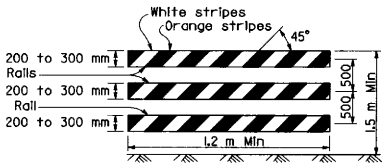

TYPE III BARRICADE

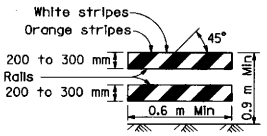

TYPE II BARRICADE

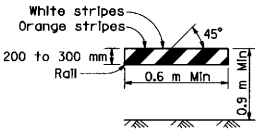

TYPE I BARRICADE
See Note A

BARRICADES (See Note 4)

Only face of rails shown. Barricade construction materials and supports as specified in the specifications.

BARRICADE	TYPE I	TYPE II	TYPE III
Width of Rail	200 mm Min-300 mm Max*	200 mm Min-300 mm Max*	200 mm Min-300 mm Max*
Length of Rail	0.6 m Min	0.6 m Min	1.2 m Min
Width of Stripes **	150 mm	150 mm	150 mm
Height	0.9 m Min	0.9 m Min	1.5 m Min
Number of Reflectorized Rail Faces	2 (one each direction)	4 (two each direction)	3 if facing traffic in one direction 6 if facing traffic in two direction

* For the wooden option dimensions are nominal lumber dimensions.
** For rails less than 0.9 m long, 100 mm wide stripes shall be used.

NOTE A

Barricades to have a minimum of 0.17 m^2 (174,204 mm^2) of retroreflective area facing traffic when used on freeways, expressways, and other high speed highways.

TYPE	REFLECTOR COLOR	
	FRONT	BACK
E	White	White (See Note 1)
F	White	None
G	Yellow	None
I	Yellow	Yellow (See Note 1)
J	Red	None

NOTES

1. The reflector used on back of delineator shall be one 75 mm square reflective sheeting.
2. The type of reflectorization and the class of delineator to be installed will be designated on the plans as E-1, F-2, etc.
3. See Standard Plan A73B for metal post details.
4. All barricade stripes shall be reflectorized.

STATE OF CALIFORNIA
DEPARTMENT OF TRANSPORTATION

DELINEATORS, CHANNELIZERS AND BARRICADES

NO SCALE

ALL DIMENSIONS ARE IN MILLIMETERS UNLESS OTHERWISE SHOWN

A73C

STD. PLAN A73C

Return to Table of Contents

DIST	COUNTY	ROUTE	KILOMETER POST TOTAL PROJECT	SHEET NO.	TOTAL SHEETS

Caltrans Metric

REGISTERED CIVIL ENGINEER

July 1, 1997
PLANS APPROVAL DATE

REGISTERED PROFESSIONAL ENGINEER Lawrence R. Fenske No. C14992 EXP. 3-31-01 CIVIL STATE OF CALIFORNIA

The State of California or its officers or agents shall not be responsible for the accuracy or completeness of electronic copies of this plan sheet.

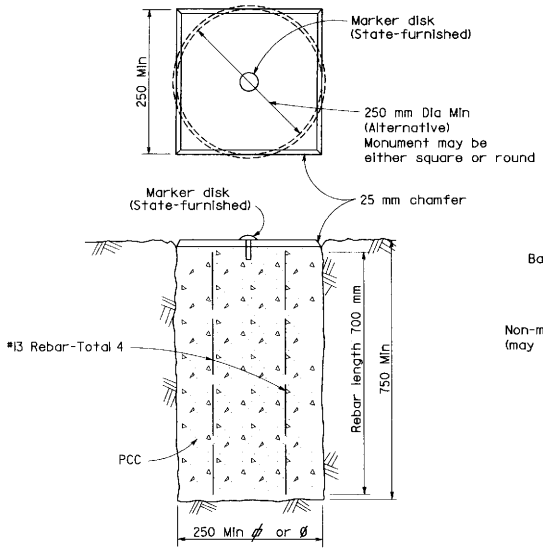

TYPE A

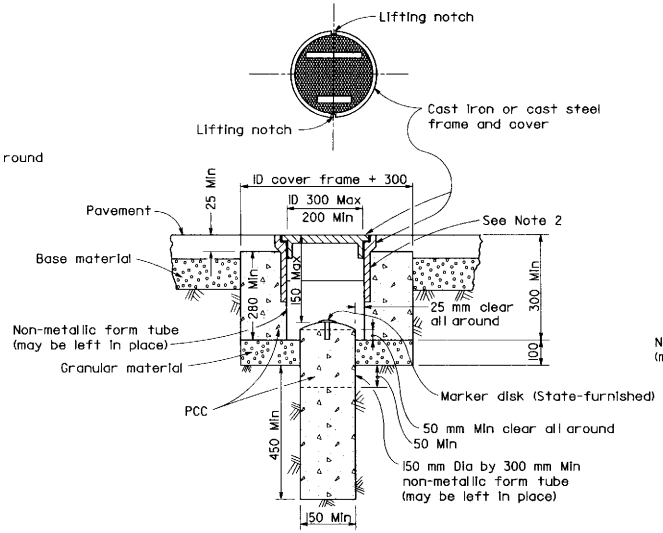

TYPE D
Alternative No. 1

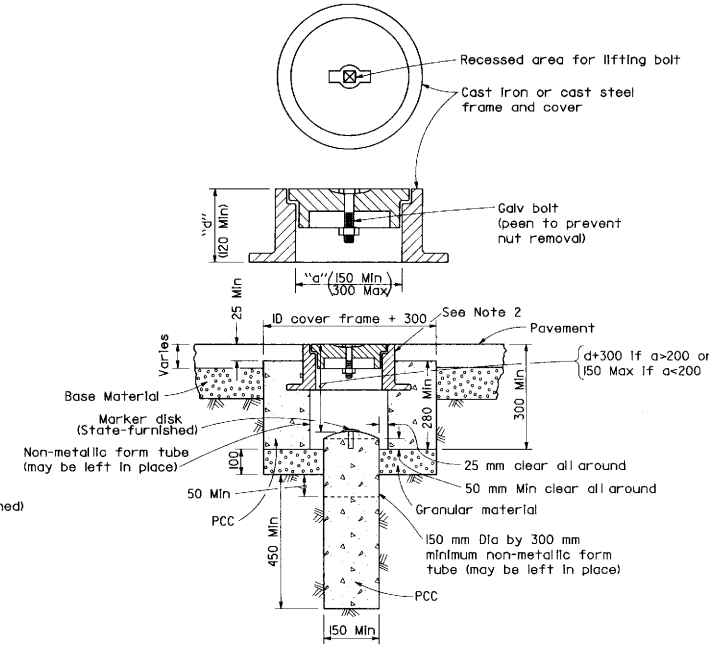

TYPE D
Alternative No. 2

NOTES

1. The configuration of the cast iron or cast steel frame and cover may vary from that shown.
2. Frame shall be embedded in the concrete a minimum of 75 mm.
3. Type D monument shall be either Alternative No. 1 or Alternative No. 2 at the contractor's option.
4. All portland cement concrete shall be Class 2 or minor concrete with 25 mm maximum aggregate.

STATE OF CALIFORNIA
DEPARTMENT OF TRANSPORTATION

SURVEY MONUMENTS

NO SCALE

ALL DIMENSIONS ARE IN
MILLIMETERS UNLESS OTHERWISE SHOWN

A74

STD. PLAN A74

Return to Table of Contents

DIST	COUNTY	ROUTE	KILOMETER POST TOTAL PROJECT	SHEET NO.	TOTAL SHEETS

Caltrans Metric

Donald E Fogle
REGISTERED CIVIL ENGINEER

July 1, 1997
PLANS APPROVAL DATE

REGISTERED PROFESSIONAL ENGINEER Donald E. Fogle No. C34637 Exp. 9-30-99 CIVIL STATE OF CALIFORNIA

The State of California or its officers or agents shall not be responsible for the accuracy or completeness of electronic copies of this plan sheet.

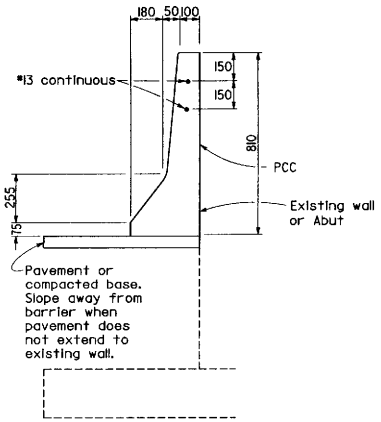

CONCRETE BARRIER
TYPE 50D
Details similar to Type 50 except as noted

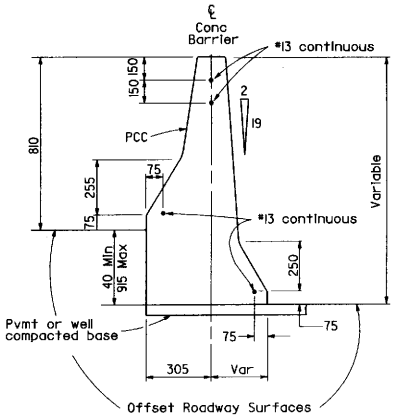

CONCRETE BARRIER
TYPE 50C
Details similar to Type 50 except as noted
Barrier End Anchor when necessary

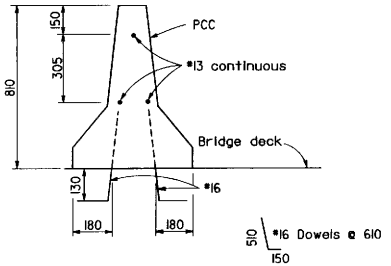

CONCRETE BARRIER
TYPE 50A
Details similar to Type 50 except as noted
See Note 7

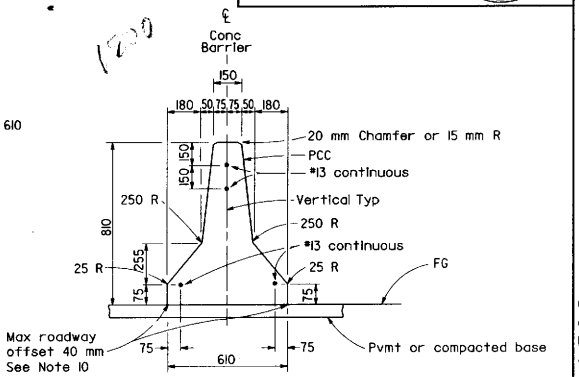

CONCRETE BARRIER
TYPE 50

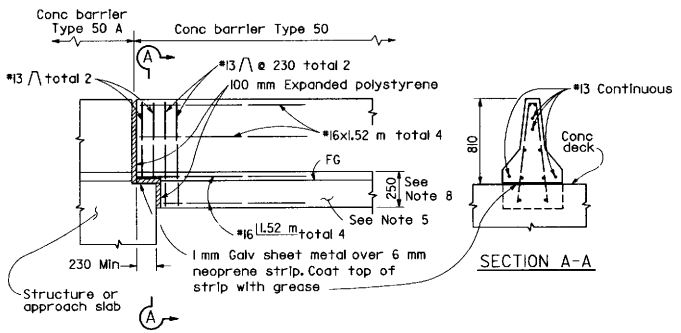

ELEVATION

SECTION A-A

CONNECTION TO STRUCTURE

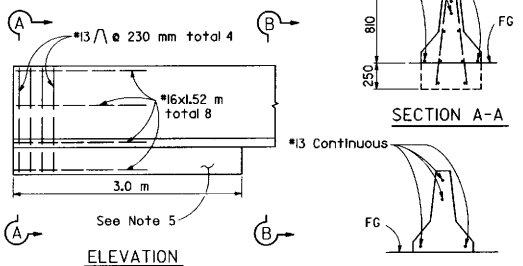

ELEVATION

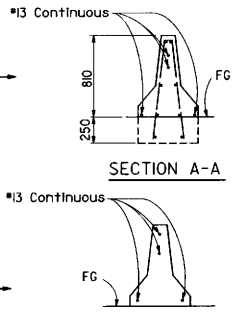

BARRIER END ANCHOR
See Note 9

NOTES

1. See Standard Plan A75B for concrete barrier transitions at bridge column and sign pedestals.
2. Opening into existing drainage inlets shall not extend above the 75 mm vertical face at bottom of the barrier.
3. Where the barrier is added to the face of an existing concrete structure, match existing weep holes.
4. Contractor may submit alternative details for Engineer's approval.
5. Footing monolithic or doweled with 2-#25 x 205 mm @ 610 mm. Required at barrier ends and at interruptions in barrier.
6. See Standard Plan A75C for glare screen details.
7. Expansion joints in concrete barrier shall be located at all deck, pavement and principal wall joints. Expansion joint filler material shall be the same size as joint or 13 mm minimum.
8. 250 mm Barrier footing extends 3.0 m back from structure.
9. For transition to TBB see Standard Plan A78D.
10. Where roadway offset is greater than 40 mm, see Concrete Barrier Type 50C.
11. Barrier delineation to be used when required by the special provisions.
12. Spacing of barrier markers to match spacing of raised pavement markers on the adjacent median edgeline pavement delineation.

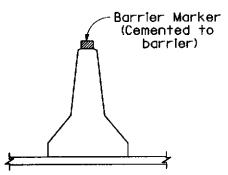

MEDIAN BARRIER DELINEATION
See Notes 11 and 12

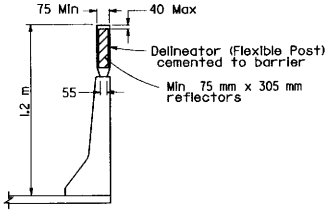

CONCRETE BARRIER DELINEATION
(For barriers not located in median)
See Note 11

STATE OF CALIFORNIA
DEPARTMENT OF TRANSPORTATION

CONCRETE BARRIER TYPE 50

NO SCALE

ALL DIMENSIONS ARE IN MILLIMETERS UNLESS OTHERWISE SHOWN

A75A

STD. PLAN A75A

Return to Table of Contents

DIST	COUNTY	ROUTE	KILOMETER POST TOTAL PROJECT	SHEET NO.	TOTAL SHEETS

Caltrans Metric

Donald E Fogle
REGISTERED CIVIL ENGINEER

July 1, 1997
PLANS APPROVAL DATE

REGISTERED PROFESSIONAL ENGINEER Donald E. Fogle No. C34637 Exp. 9-30-99 CIVIL STATE OF CALIFORNIA

The State of California or its officers or agents shall not be responsible for the accuracy or completeness of electronic copies of this plan sheet.

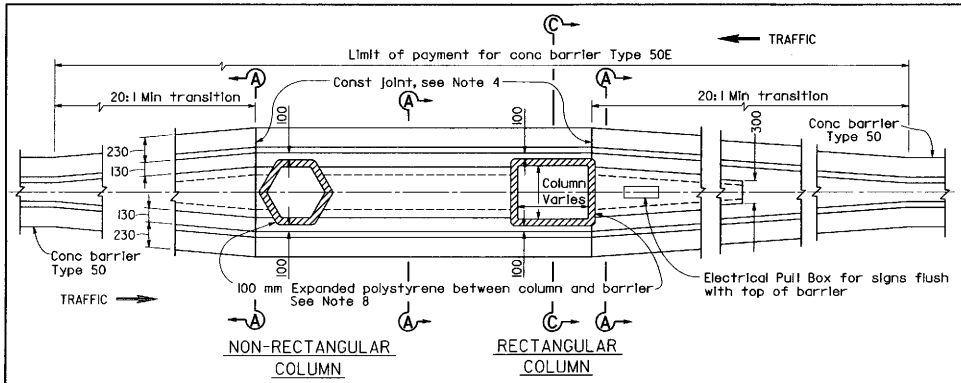

TRANSITION AT BRIDGE COLUMN

CONCRETE BARRIER TYPE 50E

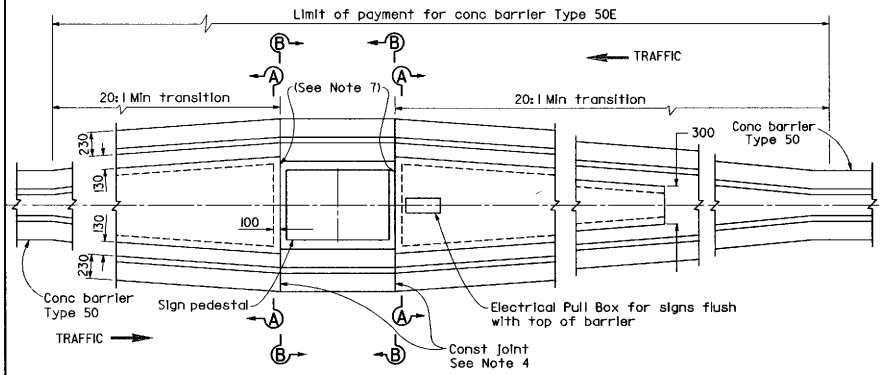

TRANSITION AT SIGN PEDESTAL

CONCRETE BARRIER TYPE 50E

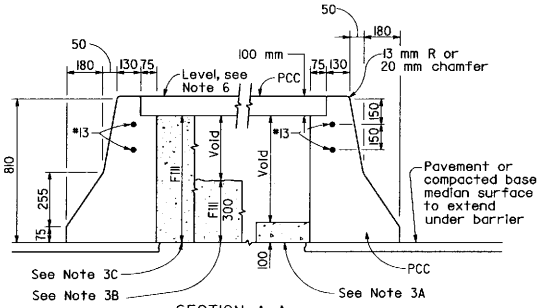

SECTION A-A

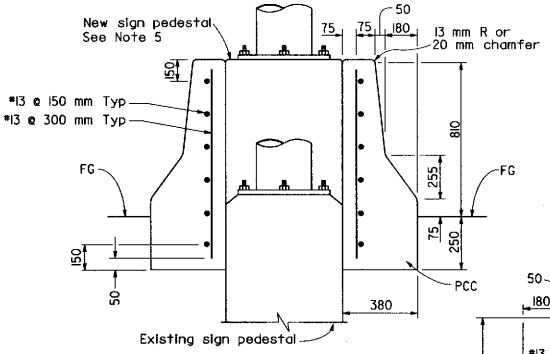

SECTION B-B

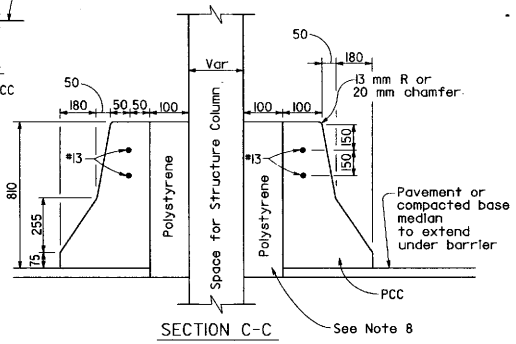

SECTION C-C

NOTES

1. See Standard Plan A75A for concrete barrier Type 50.
2. See Standard Plan A75D for concrete headlight glare screen details.
3. Contractor options for fill between barrier walls:
   A. Place 100 mm PCC at base between barrier walls.
   B. Place 300 mm of granular material at base between walls.
   C. Place granular material from base to bottom of 100 mm cap.
   Forming material for 100 mm cap may remain in place.
4. Reinforcing steel shall extend continuous through construction joints.
5. See "Overhead Sign" plans for sign pedestal elevations on new construction.
6. Adjust height of barrier on low side of offset or superelevated roadways to provide level grade across top of Type 50E barrier.
7. 100 mm PCC vertical walls at existing sign pedestals.
8. Enclose column with 100 mm expanded polystrene at locations where concrete or cement treated base encases the column.

STATE OF CALIFORNIA
DEPARTMENT OF TRANSPORTATION

CONCRETE BARRIER TYPE 50E

NO SCALE

ALL DIMENSIONS ARE IN MILLIMETERS UNLESS OTHERWISE SHOWN

A75B

STD. PLAN A75B

Return to Table of Contents

DIST	COUNTY	ROUTE	KILOMETER POST TOTAL PROJECT	SHEET NO.	TOTAL SHEETS

Caltrans Metric

Donald E Fogle
REGISTERED CIVIL ENGINEER

July 1, 1997
PLANS APPROVAL DATE

Donald E. Fogle No. C34637 Exp. 9-30-99 CIVIL — REGISTERED PROFESSIONAL ENGINEER — STATE OF CALIFORNIA

The State of California or its officers or agents shall not be responsible for the accuracy or completeness of electronic copies of this plan sheet.

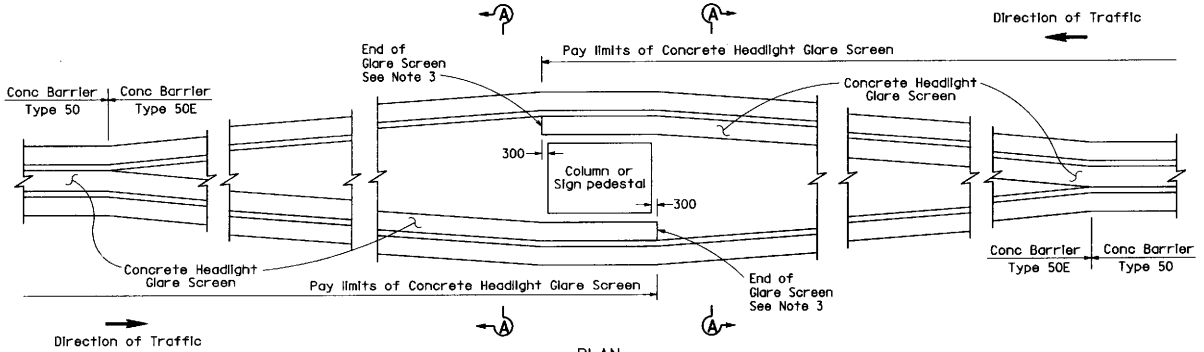

PLAN

CONCRETE HEADLIGHT GLARE SCREEN AT CONCRETE BARRIER TYPE 50E

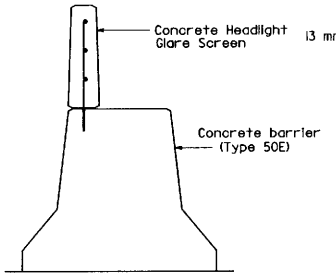

SECTION A-A

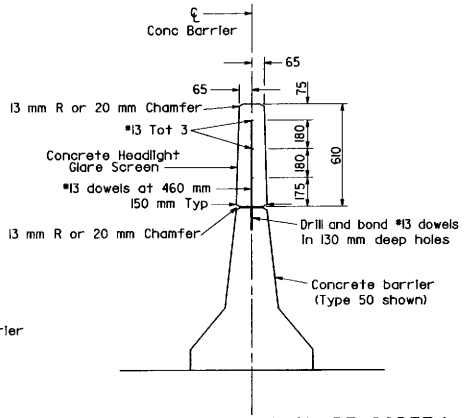

CONCRETE HEADLIGHT GLARE SCREEN ON CONCRETE BARRIER

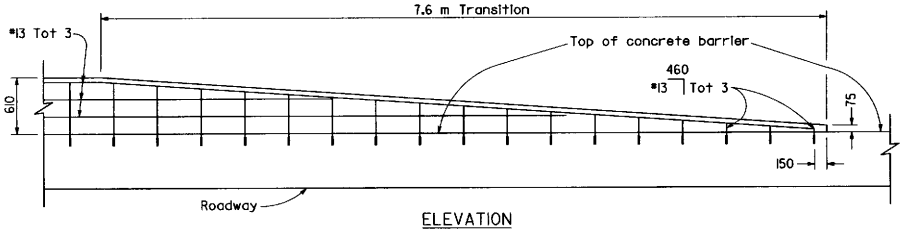

ELEVATION

CONCRETE HEADLIGHT GLARE SCREEN END TRANSITION

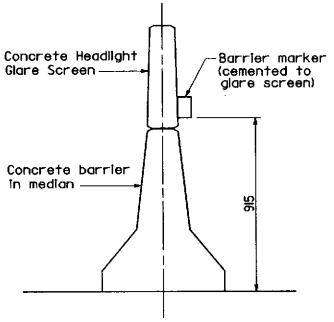

BARRIER DELINEATION
See Notes 4 and 5

NOTES

1. For concrete barrier details and layouts not shown see Standard Plans A75A and A75B.
2. Expansion joints in concrete glare screen shall match expansion joints in concrete barrier.
3. Concrete headlight glare screen shall extend one foot beyond all columns or sign pedestals for each direction of travel. Sloped end transition of concrete glare screen not required where glare screen terminates on Concrete Barrier Type 50E.
4. Barrier delineation to be used when required by the special provisions.
5. Spacing of barrier markers to match spacing of raised pavement markers on the adjacent median edgeline pavement delineation.
6. Full height of barrier and glare screen to be continued between columns.

STATE OF CALIFORNIA
DEPARTMENT OF TRANSPORTATION

CONCRETE HEADLIGHT GLARE SCREEN

NO SCALE

ALL DIMENSIONS ARE IN MILLIMETERS UNLESS OTHERWISE SHOWN

A75D

STD. PLAN A75D

Return to Table of Contents

DIST	COUNTY	ROUTE	KILOMETER POST TOTAL PROJECT	SHEET NO.	TOTAL SHEETS

Caltrans Metric

Donald E Fogle
REGISTERED CIVIL ENGINEER

July 1, 1997
PLANS APPROVAL DATE

REGISTERED PROFESSIONAL ENGINEER Donald E. Fogle No. C34637 Exp. 9-30-99 CIVIL STATE OF CALIFORNIA

The State of California or its officers or agents shall not be responsible for the accuracy or completeness of electronic copies of this plan sheet.

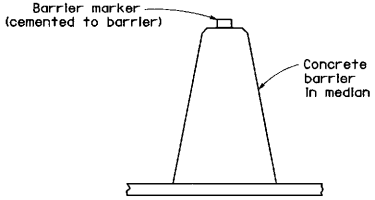

CONCRETE BARRIER TYPE 60 DELINEATION

See Notes 7 and 8

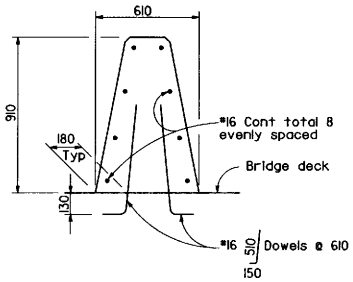

CONCRETE BARRIER TYPE 60A

Details similar to Type 60 except as noted.

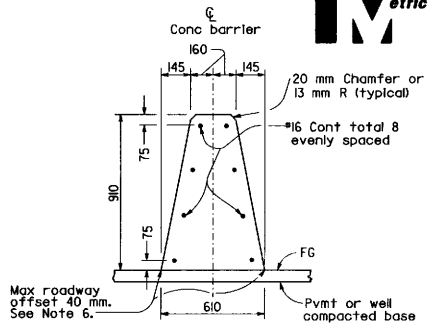

CONCRETE BARRIER TYPE 60

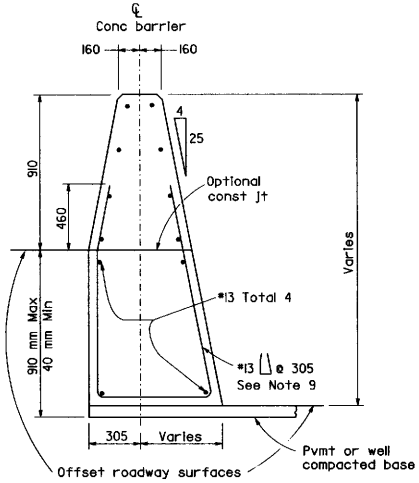

CONCRETE BARRIER TYPE 60C

Details similar to Type 60 except as noted.
Concrete barrier end anchor when necessary.

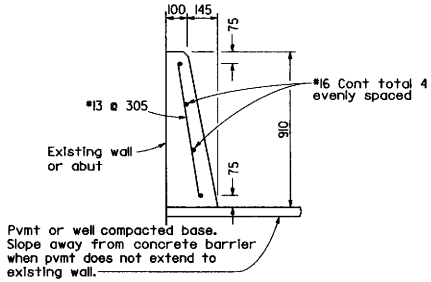

CONCRETE BARRIER TYPE 60D

NOTES

1. See Standard Plan A76B for details of Concrete Barrier Type 60 end anchors, connection to structures and transitions to Concrete Barrier Type 50 and Concrete Barrier Type 60S.
2. See Standard Plan A76C for Concrete Barrier Type 60 transitions at bridge column and sign pedestals.
3. Where glare screen is required on Concrete Barrier Type 60, use Concrete Barrier Type 60G.
4. Where the concrete barrier is added to the face of existing concrete structure, match existing weep holes.
5. Expansion joints in concrete barrier shall be located at all deck, pavement and principal wall joints. Expansion joint filler material shall be the same size as joint or 13 mm minimum.
6. Where roadway offset is greater than 40 mm, see Concrete Barrier Type 60C.
7. Barrier delineation to be used when required by the Special Provisions.
8. Spacing of barrier markers to match spacing of raised pavement markers on the adjacent median edgeline pavement delineation.
9. Reinforcing stirrup not required for roadway offsets less than 305 mm.

STATE OF CALIFORNIA
DEPARTMENT OF TRANSPORTATION

CONCRETE BARRIER TYPE 60

NO SCALE

ALL DIMENSIONS ARE IN
MILLIMETERS UNLESS OTHERWISE SHOWN

A76A

STD. PLAN A76A

Return to Table of Contents

DIST	COUNTY	ROUTE	KILOMETER POST TOTAL PROJECT	SHEET NO.	TOTAL SHEETS

Caltrans Metric

Donald E Fogle
REGISTERED CIVIL ENGINEER

July 1, 1997
PLANS APPROVAL DATE

REGISTERED PROFESSIONAL ENGINEER Donald E. Fogle No. C34637 Exp. 9-30-99 CIVIL STATE OF CALIFORNIA

The State of California or its officers or agents shall not be responsible for the accuracy or completeness of electronic copies of this plan sheet.

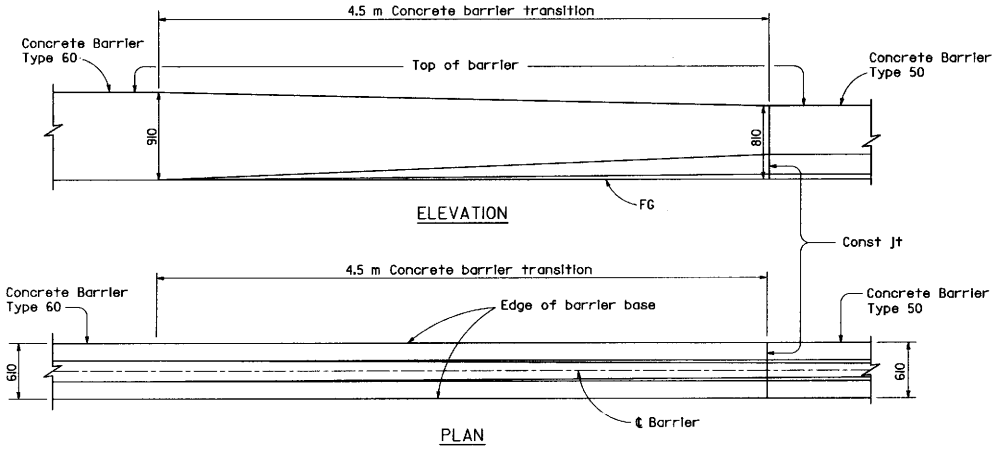

TRANSITION CONCRETE BARRIER TYPE 60 TO CONCRETE BARRIER TYPE 50

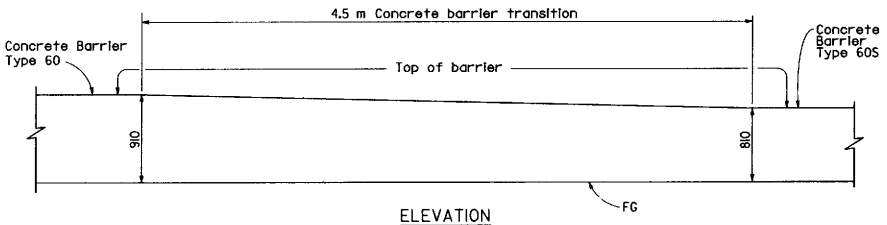

TRANSITION CONCRETE BARRIER TYPE 60 TO CONCRETE BARRIER TYPE 60S

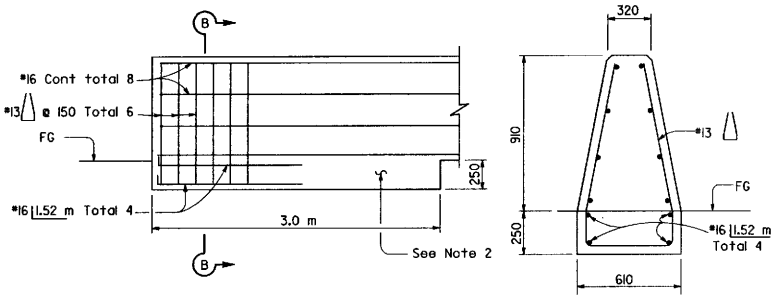

CONCRETE BARRIER TYPE 60
CONCRETE BARRIER END ANCHORAGE

SECTION B-B

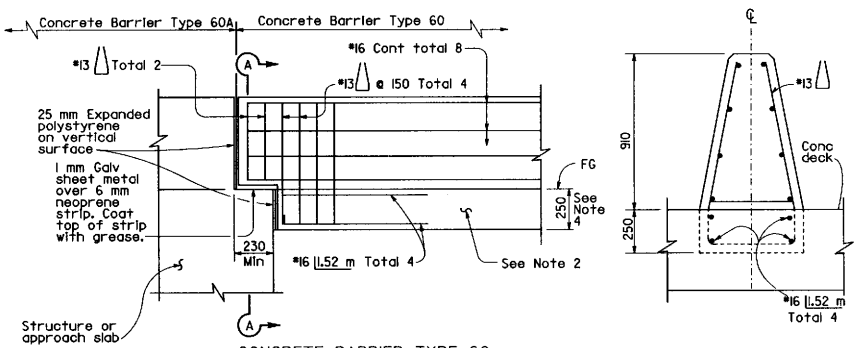

CONCRETE BARRIER TYPE 60
CONNECTION TO STRUCTURE

SECTION A-A

NOTES

1. See Standard Plan A76A for Concrete Barrier Type 60 and Type 60A.
2. Footing monolithic or doweled with 2-#25x205 mm @ 610 mm. The footing is required at concrete barrier ends and at interruptions in concrete barrier.
3. Expansion joints in concrete barrier shall be located at all deck, pavement and principal wall joints. Expansion joint filler material shall be the same size as joint or 13 mm minimum.
4. 250 mm Concrete barrier footing extends 3.0 m back from structure.
5. See Standard Plan A78I for transition to Thrie Beam Barrier.

STATE OF CALIFORNIA
DEPARTMENT OF TRANSPORTATION

CONCRETE BARRIER TYPE 60

NO SCALE

ALL DIMENSIONS ARE IN MILLIMETERS UNLESS OTHERWISE SHOWN

A76B

STD. PLAN A76B

Return to Table of Contents

DIST	COUNTY	ROUTE	KILOMETER POST TOTAL PROJECT	SHEET NO.	TOTAL SHEETS

Caltrans Metric

Donald E Fogle
REGISTERED CIVIL ENGINEER

July 1, 1997
PLANS APPROVAL DATE

REGISTERED PROFESSIONAL ENGINEER Donald E. Fogle No. C34637 Exp. 9-30-99 CIVIL STATE OF CALIFORNIA

The State of California or its officers or agents shall not be responsible for the accuracy or completeness of electronic copies of this plan sheet.

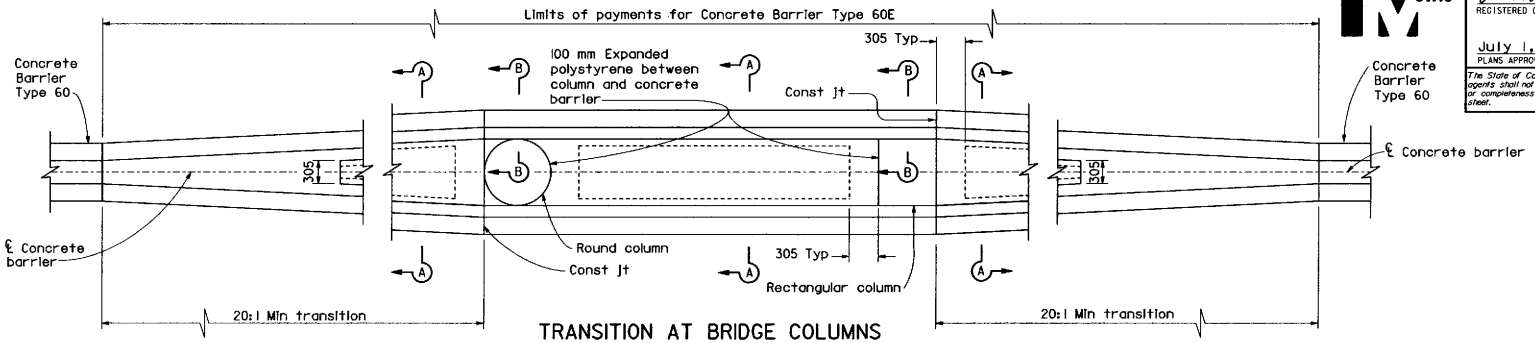

TRANSITION AT BRIDGE COLUMNS

CONCRETE BARRIER TYPE 60E

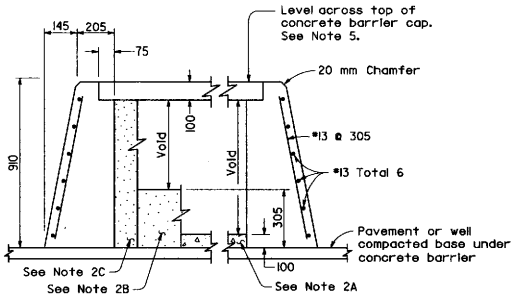

SECTION A-A

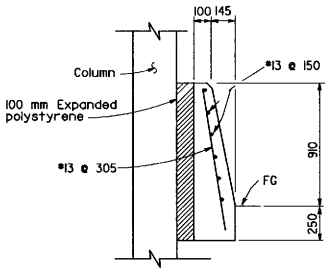

SECTION B-B

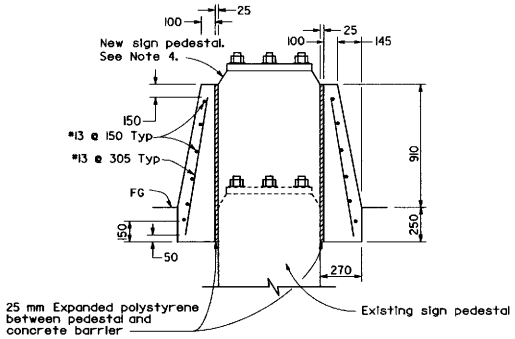

SECTION C-C

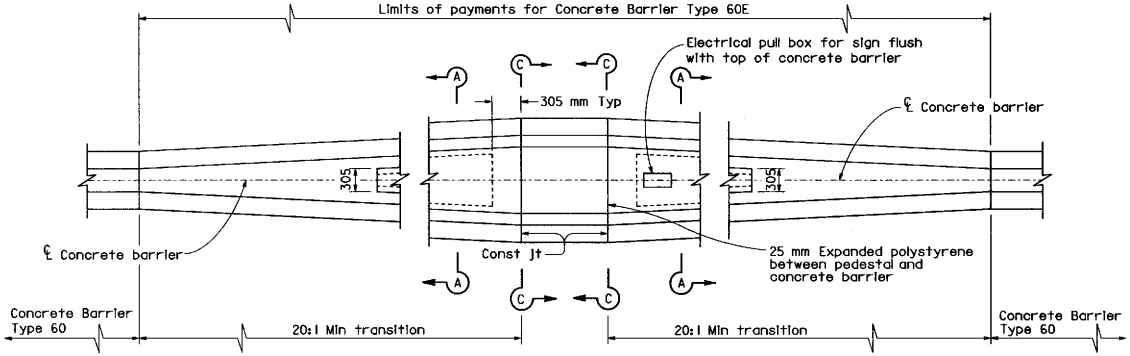

TRANSITION AT SIGN PEDESTAL

CONCRETE BARRIER TYPE 60E

NOTES

1. See Standard Plan A76A for Concrete Barrier Type 60.
2. Contractor options for fill between concrete barrier walls:
   A. Place 100 mm PCC at base between concrete barrier walls.
   B. Place 305 mm of granular material at base between walls.
   C. Place granular material from base to bottom of 100 mm cap.
3. Reinforcing steel shall extend continuous through construction joints.
4. See "Overhead Sign" plans for sign pedestal elevations on new construction.
5. Adjust height of concrete barrier wall on low side of offset or superelevated roadways to provide level grade across top of concrete barrier cap.

STATE OF CALIFORNIA
DEPARTMENT OF TRANSPORTATION

CONCRETE BARRIER TYPE 60E

NO SCALE

ALL DIMENSIONS ARE IN MILLIMETERS UNLESS OTHERWISE SHOWN

A76C

STD. PLAN A76C

Return to Table of Contents

DIST	COUNTY	ROUTE	KILOMETER POST TOTAL PROJECT	SHEET NO.	TOTAL SHEETS

Metric

Donald E. Fogle
REGISTERED CIVIL ENGINEER

July 1, 1997
PLANS APPROVAL DATE

REGISTERED PROFESSIONAL ENGINEER
Donald E. Fogle
No. C34637
Exp. 9-30-99
CIVIL
STATE OF CALIFORNIA

The State of California or its officers or agents shall not be responsible for the accuracy or completeness of electronic copies of this plan sheet.

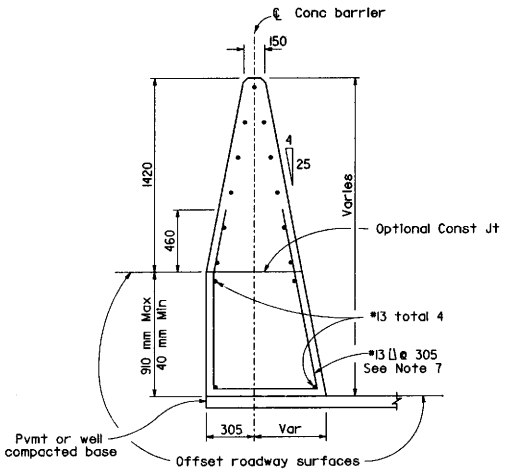

CONCRETE BARRIER TYPE 60GC

Details similar to Type 60G except as noted.

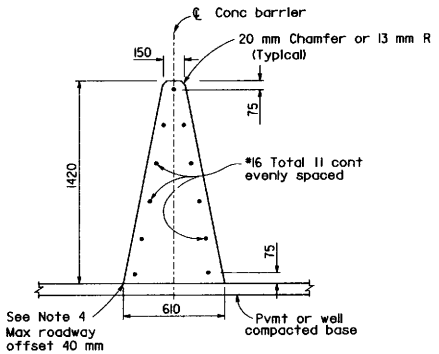

CONCRETE BARRIER TYPE 60G

(Monolithic concrete glare screen/barrier)

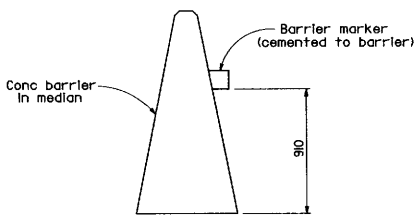

CONCRETE BARRIER TYPE 60G DELINEATION

See Notes 5 and 6

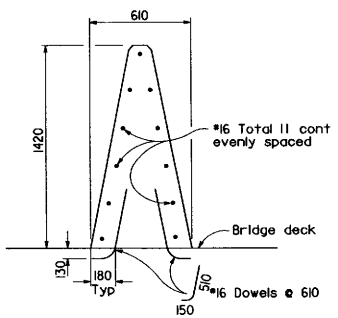

CONCRETE BARRIER TYPE 60GA

Details similar to Type 60G except as noted.

NOTES

1. See Standard Plan A76E for details of Concrete Barrier Type 60G end anchors, connection to structures and transitions to Concrete Barrier Type 60.
2. See Standard Plan A76F for Concrete Barrier Type 60G transitions at bridge column and sign pedestals.
3. Expansion joints in concrete barrier shall be located at all deck, pavement and principal wall joints. Expansion joint filler material shall be the same size as joint or 13 mm minimum.
4. Where roadway offset is greater than 40 mm, see Concrete Barrier Type 60GC.
5. Barrier delineation to be used when required by the Special Provisions.
6. Spacing of barrier markers to match spacing of raised pavement markers on the adjacent median edgeline pavement delineation.
7. Reinforcing stirrup not required for offsets less than 305 mm.

STATE OF CALIFORNIA
DEPARTMENT OF TRANSPORTATION

CONCRETE BARRIER TYPE 60G

NO SCALE

ALL DIMENSIONS ARE IN MILLIMETERS UNLESS OTHERWISE SHOWN

A76D

STD. PLAN A76D

Return to Table of Contents

DIST	COUNTY	ROUTE	KILOMETER POST TOTAL PROJECT	SHEET NO.	TOTAL SHEETS

Donald E Fogle
REGISTERED CIVIL ENGINEER

July 1, 1997
PLANS APPROVAL DATE

REGISTERED PROFESSIONAL ENGINEER Donald E. Fogle No. C34637 EXP. 9-30-99 CIVIL STATE OF CALIFORNIA

The State of California or its officers or agents shall not be responsible for the accuracy or completeness of electronic copies of this plan sheet.

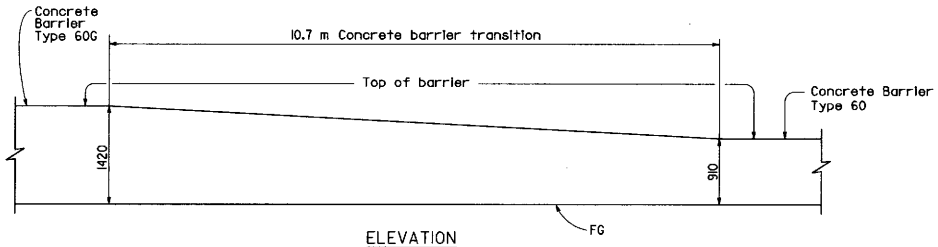

ELEVATION

TRANSITION CONCRETE BARRIER TYPE 60G TO CONCRETE BARRIER TYPE 60

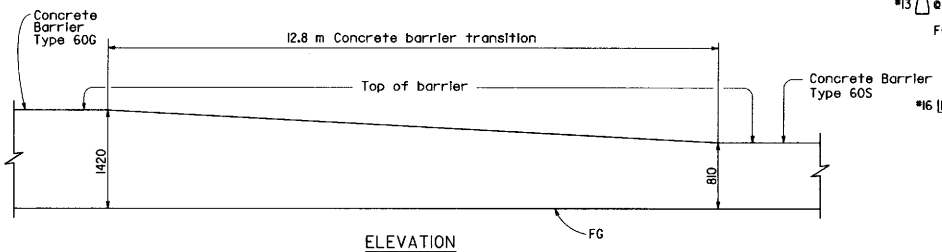

ELEVATION

TRANSITION CONCRETE BARRIER TYPE 60G TO CONCRETE BARRIER TYPE 60S

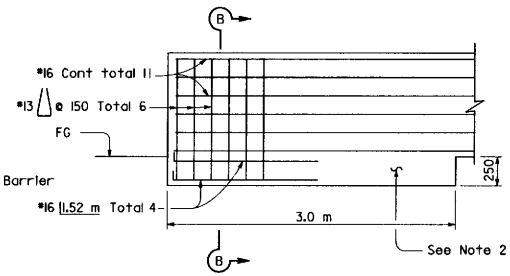

CONCRETE BARRIER TYPE 60G

CONCRETE BARRIER END ANCHORAGE

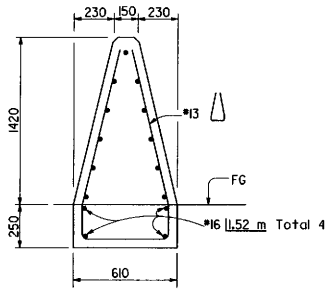

SECTION B-B

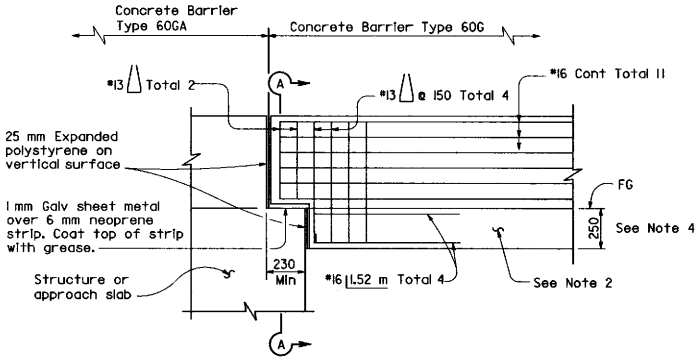

CONCRETE BARRIER TYPE 60G

CONNECTION TO STRUCTURE

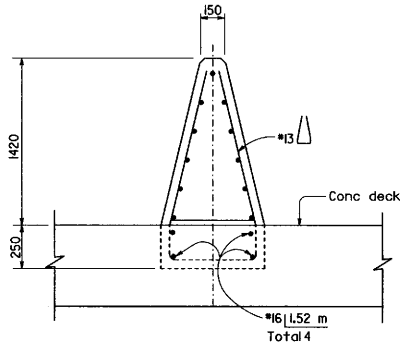

SECTION A-A

NOTES

1. See Standard Plan A76D for Concrete Barrier Type 60G and Type 60GA.
2. Footing monolithic or doweled with 2-#25x205 mm @ 610 mm. The footing is required at concrete barrier ends and at interruptions in concrete barrier.
3. Expansion joints in concrete barrier shall be located at all deck, pavement and principal wall joints. Expansion joint filler material shall be the same size as joint or 13 mm minimum.
4. 250 mm Concrete barrier footing extends 3.0 m back from structure.
5. See Standard Plan A78I for transition to Thrie Beam Barrier.

STATE OF CALIFORNIA
DEPARTMENT OF TRANSPORTATION

CONCRETE BARRIER TYPE 60G

NO SCALE

ALL DIMENSIONS ARE IN MILLIMETERS UNLESS OTHERWISE SHOWN

A76E

STD. PLAN A76E

Return to Table of Contents

DIST	COUNTY	ROUTE	KILOMETER POST TOTAL PROJECT	SHEET NO.	TOTAL SHEETS

Donald E Fogle
REGISTERED CIVIL ENGINEER

July 1, 1997
PLANS APPROVAL DATE

REGISTERED PROFESSIONAL ENGINEER Donald E. Fogle No. C34637 Exp. 9-30-99 CIVIL STATE OF CALIFORNIA

The State of California or its officers or agents shall not be responsible for the accuracy or completeness of electronic copies of this plan sheet.

California Metric

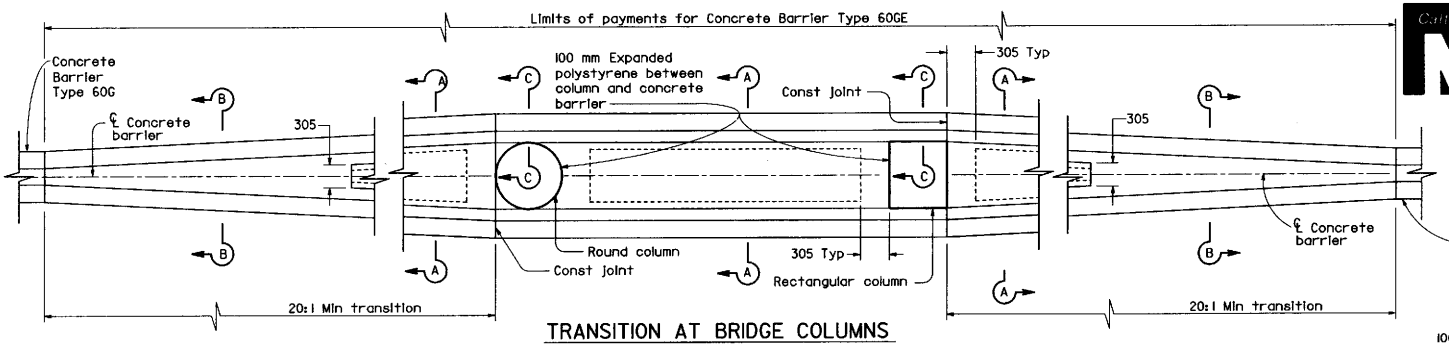

TRANSITION AT BRIDGE COLUMNS
CONCRETE BARRIER TYPE 60GE

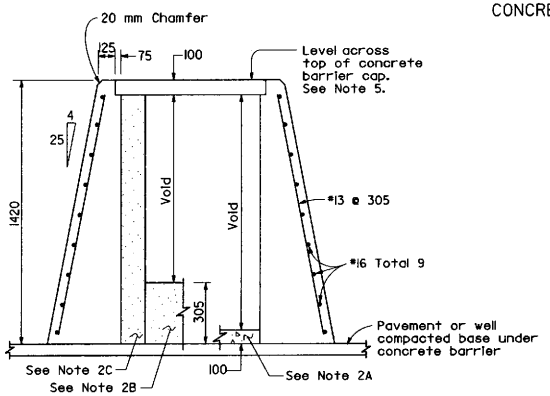

SECTION A-A

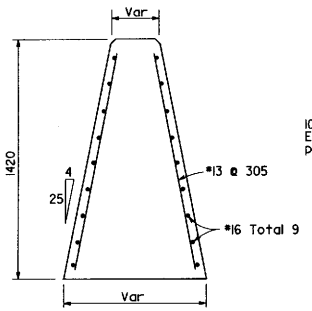

SECTION B-B

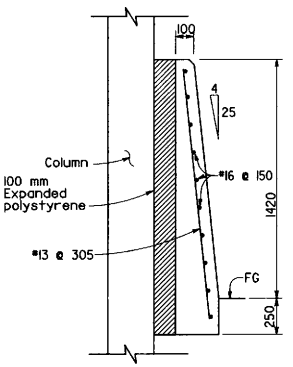

SECTION C-C

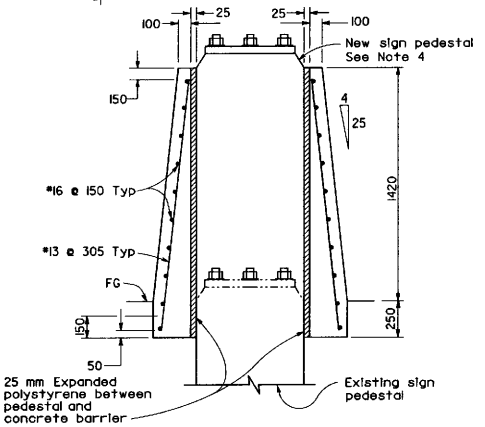

SECTION D-D

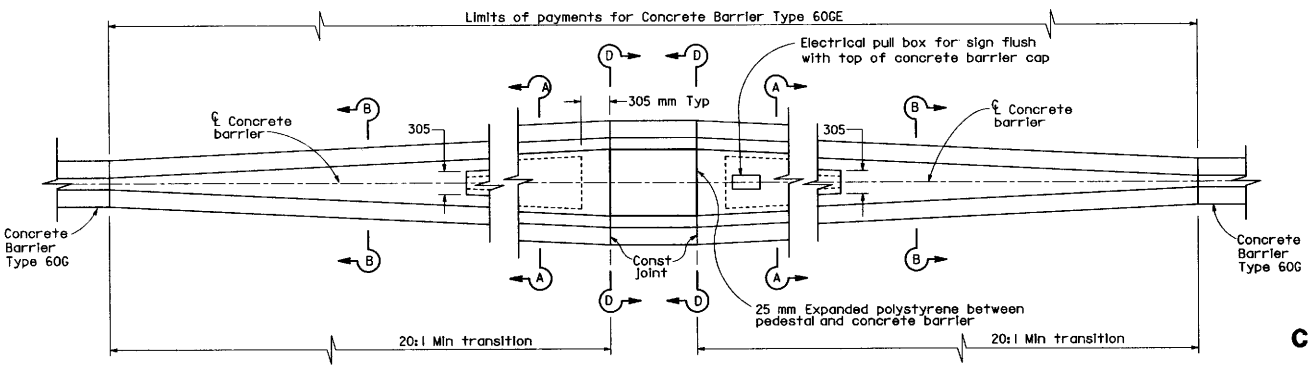

TRANSITION AT SIGN PEDESTAL
CONCRETE BARRIER TYPE 60GE

NOTES

1. See Standard Plan A76D for Concrete Barrier Type 60G.
2. Contractor options for fill between concrete barrier walls:
   A. Place 100 mm PCC at base between concrete barrier walls.
   B. Place 305 mm of granular material at base between walls.
   C. Place granular material from base to bottom of 100 mm cap.
3. Reinforcing steel shall extend continuous through construction joints.
4. See "Overhead Sign" plans for sign pedestal elevations on new construction.
5. Adjust height of concrete barrier wall on low side of offset or superelevated roadways to provide level grade across top of concrete barrier cap.

STATE OF CALIFORNIA
DEPARTMENT OF TRANSPORTATION

CONCRETE BARRIER TYPE 60GE

NO SCALE

ALL DIMENSIONS ARE IN MILLIMETERS UNLESS OTHERWISE SHOWN

A76F

STD. PLAN A76F

Return to Table of Contents

DIST	COUNTY	ROUTE	KILOMETER POST TOTAL PROJECT	SHEET NO.	TOTAL SHEETS

Caltrans Metric

Donald E Fogle
REGISTERED CIVIL ENGINEER

July 1, 1997
PLANS APPROVAL DATE

REGISTERED PROFESSIONAL ENGINEER Donald E. Fogle NO. C34637 Exp. 9-30-99 CIVIL STATE OF CALIFORNIA

The State of California or its officers or agents shall not be responsible for the accuracy or completeness of electronic copies of this plan sheet.

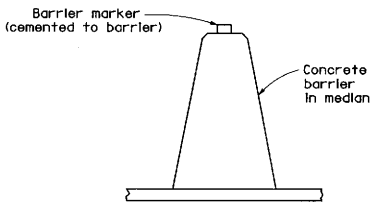

CONCRETE BARRIER TYPE 60S DELINEATION

See Notes 7 and 8

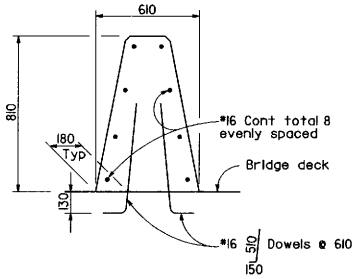

CONCRETE BARRIER TYPE 60SA

Details similar to Type 60S except as noted.

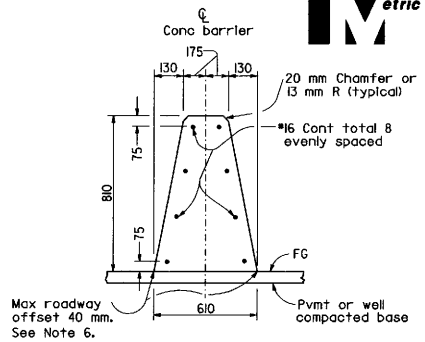

CONCRETE BARRIER TYPE 60S

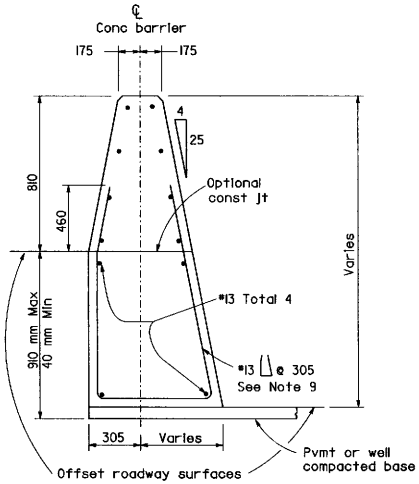

CONCRETE BARRIER TYPE 60SC

Details similar to Type 60S except as noted.
Concrete barrier end anchor when necessary.

NOTES

1. See Standard Plan A76H for details of Concrete Barrier Type 60S end anchors, connection to structures and transitions to Concrete Barrier Type 50.
2. See Standard Plan A76I for Concrete Barrier Type 60S transitions at bridge column and sign pedestals.
3. Where glare screen is required on top of concrete barrier, use Concrete Barrier Type 60G.
4. Where the concrete barrier is added to the face of existing concrete structure, match existing weep holes.
5. Expansion joints in concrete barrier shall be located at all deck, pavement and principal wall joints. Expansion joint filler material shall be the same size as joint or 13 mm minimum.
6. Where roadway offset is greater than 40 mm, see Concrete Barrier Type 60SC.
7. Barrier delineation to be used when required by the Special Provisions.
8. Spacing of barrier markers to match spacing of raised pavement markers on the adjacent median edgeline pavement delineation.
9. Reinforcing stirrup not required for roadway offsets less than 305 mm.

STATE OF CALIFORNIA
DEPARTMENT OF TRANSPORTATION

CONCRETE BARRIER TYPE 60S

NO SCALE

ALL DIMENSIONS ARE IN
MILLIMETERS UNLESS OTHERWISE SHOWN

A76G

STD. PLAN A76G

Return to Table of Contents

DIST	COUNTY	ROUTE	KILOMETER POST TOTAL PROJECT	SHEET NO.	TOTAL SHEETS

California Metric

Donald E Fogle
REGISTERED CIVIL ENGINEER

July 1, 1997
PLANS APPROVAL DATE

REGISTERED PROFESSIONAL ENGINEER Donald E. Fogle No. C34637 Exp. 9-30-99 CIVIL STATE OF CALIFORNIA

The State of California or its officers or agents shall not be responsible for the accuracy or completeness of electronic copies of this plan sheet.

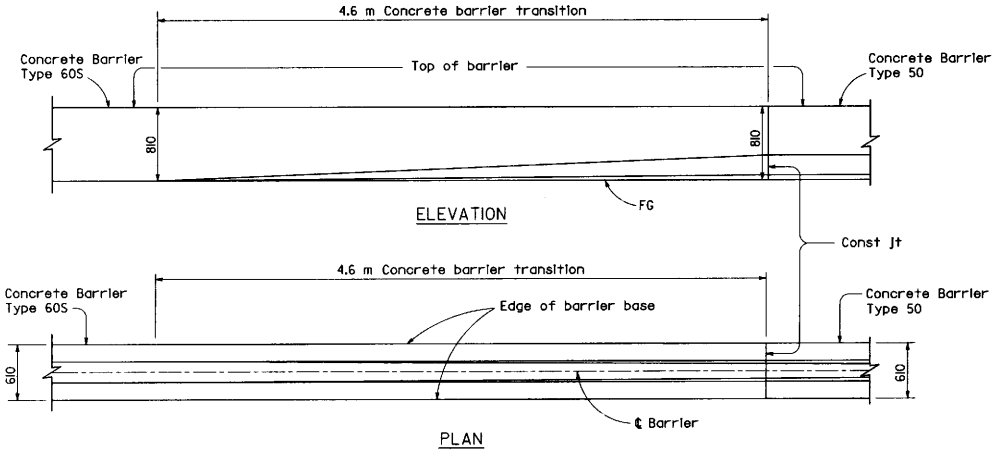

TRANSITION TYPE 60S CONCRETE BARRIER TO TYPE 50 CONCRETE BARRIER

NOTES

1. See Standard Plan A76G for Concrete Barrier Type 60S and Type 60SA.
2. Footing monolithic or doweled with 2-#25x205 mm @ 610 mm. The footing is required at concrete barrier ends and at interruptions in concrete barrier.
3. Expansion joints in concrete barrier shall be located at all deck, pavement and principal wall joints. Expansion joint filler material shall be the same size as joint or 13 mm minimum.
4. 250 mm Concrete barrier footing extends 3.0 m back from structure.
5. See Standard Plan A78I for transition to Thrie Beam Barrier.

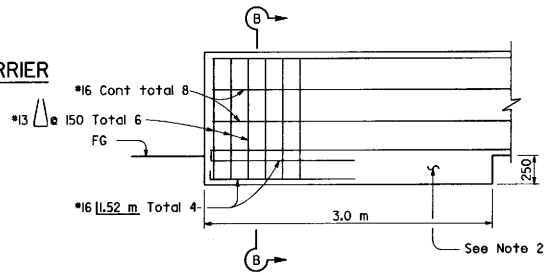

CONCRETE BARRIER TYPE 60S

CONCRETE BARRIER END ANCHORAGE

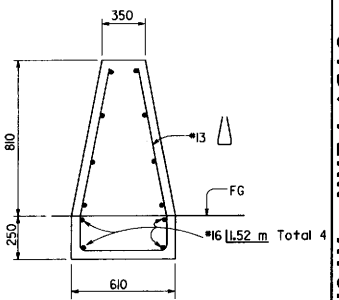

SECTION B-B

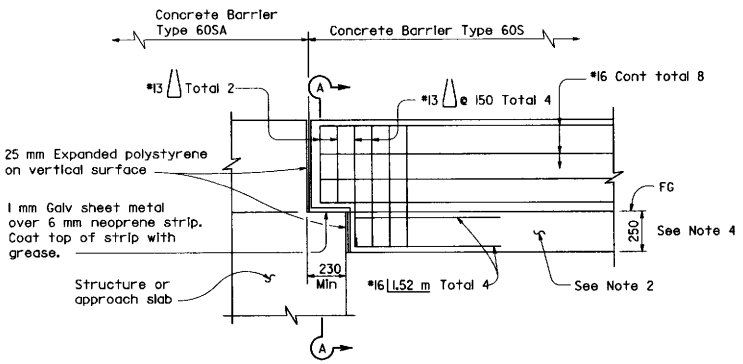

CONCRETE BARRIER TYPE 60S

CONNECTION TO STRUCTURE

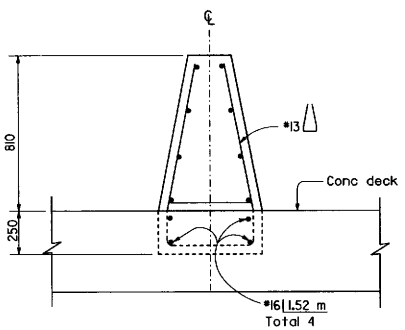

SECTION A-A

STATE OF CALIFORNIA
DEPARTMENT OF TRANSPORTATION

CONCRETE BARRIER TYPE 60S

NO SCALE

ALL DIMENSIONS ARE IN MILLIMETERS UNLESS OTHERWISE SHOWN

A76H

STD. PLAN A76H

Return to Table of Contents

DIST	COUNTY	ROUTE	KILOMETER POST TOTAL PROJECT	SHEET NO.	TOTAL SHEETS

Metric

Donald E Fogle
REGISTERED CIVIL ENGINEER

July 1, 1997
PLANS APPROVAL DATE

REGISTERED PROFESSIONAL ENGINEER Donald E. Fogle No. C34637 Exp. 9-30-99 CIVIL STATE OF CALIFORNIA

The State of California or its officers or agents shall not be responsible for the accuracy or completeness of electronic copies of this plan sheet.

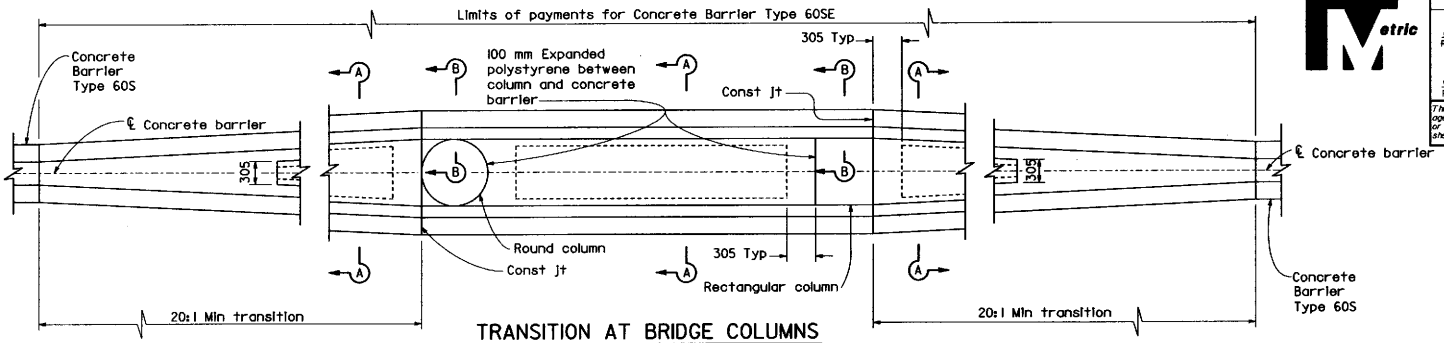

TRANSITION AT BRIDGE COLUMNS
CONCRETE BARRIER TYPE 60SE

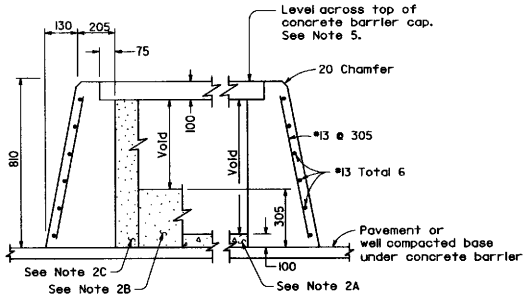

SECTION A-A

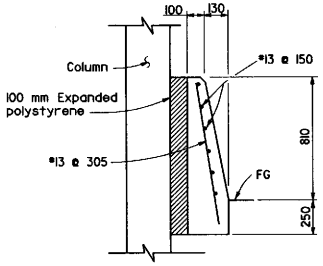

SECTION B-B

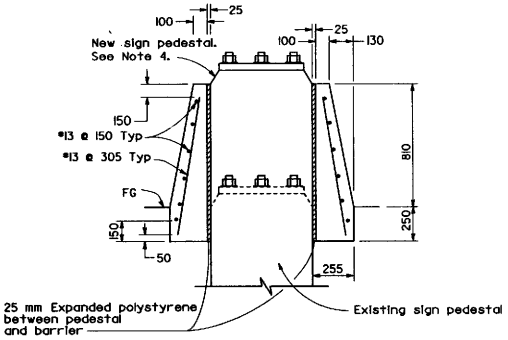

SECTION C-C

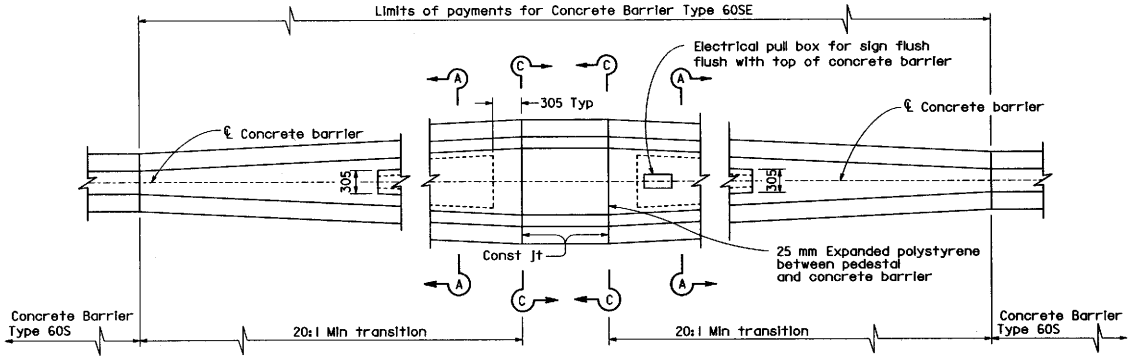

TRANSITION AT SIGN PEDESTAL
CONCRETE BARRIER TYPE 60SE

NOTES

1. See Standard Plan A76G for Concrete Barrier Type 60S.
2. Contractor options for fill between concrete barrier walls:
   A. Place 100 mm PCC at base between concrete barrier walls.
   B. Place 305 mm of granular material at base between walls.
   C. Place granular material from base to bottom of 100 mm cap.
3. Reinforcing steel shall extend continuous through construction joints.
4. See "Overhead Sign" plans for sign pedestal elevations on new construction.
5. Adjust height of concrete barrier wall on low side of offset or superelevated roadways to provide level grade across top of concrete barrier cap.

STATE OF CALIFORNIA
DEPARTMENT OF TRANSPORTATION

CONCRETE BARRIER TYPE 60SE

NO SCALE

ALL DIMENSIONS ARE IN MILLIMETERS UNLESS OTHERWISE SHOWN

A76I

STD. PLAN A76I

Return to Table of Contents

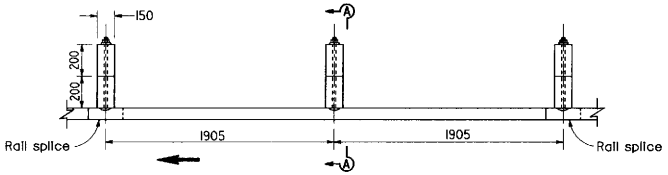

PLAN

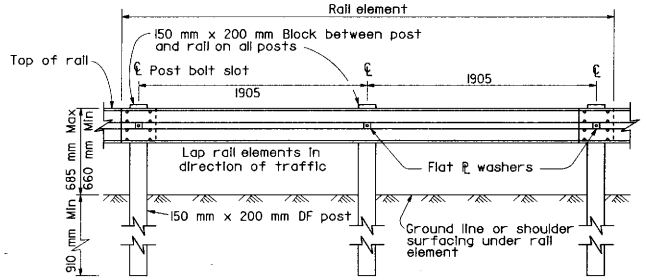

ELEVATION

METAL BEAM GUARD RAILING WITH WOOD POST AND BLOCKS

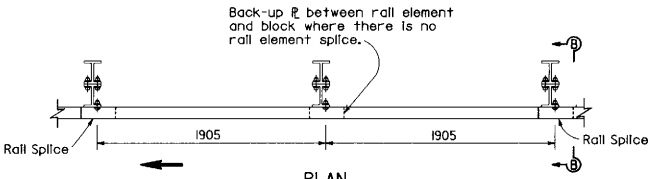

PLAN

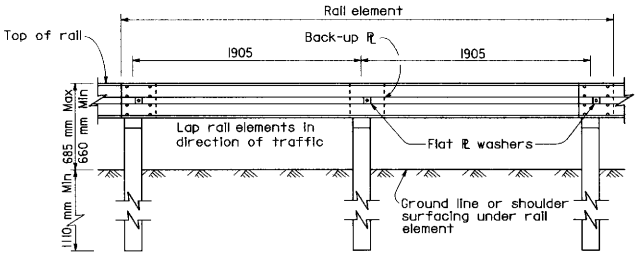

ELEVATION

METAL BEAM GUARD RAILING WITH MW150 x 14 STEEL POSTS AND BLOCKS

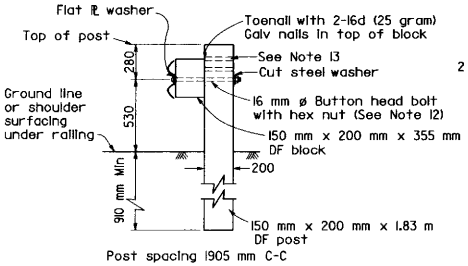

SECTION A-A

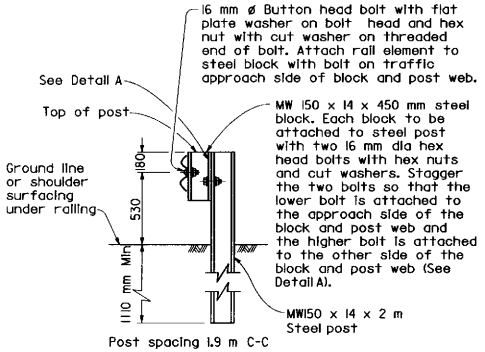

SECTION B-B

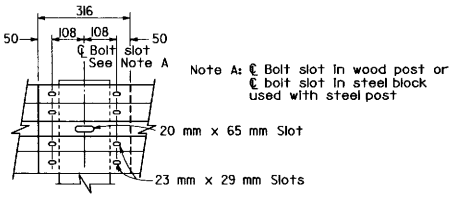

ELEVATION

RAIL ELEMENT SPLICE DETAIL

Connect the overlapped ends of the rail elements with 16 mm ø x 35 mm button head oval shoulder bolts inserted into the 23 mm x 29 mm slots and bolted together with 16 mm ø x 35 mm recessed hex nuts. A total of 8 bolts and nuts are to be used at each rail splice connection. The ends of the rail elements are to be overlapped in the direction of traffic (see details). Where a terminal section or end section is to be attached to the end of a rail element, a total of 4 of the above described splice bolts and nuts are to be used.

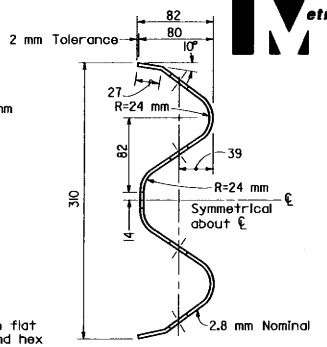

SECTION THRU RAIL ELEMENT

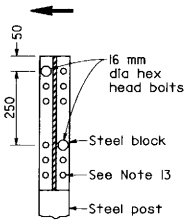

DETAIL A

STEEL BLOCK ATTACHMENT TO STEEL POST

NOTES

1. For details of standard hardware used to construct guard railing, see Standard Plan A77B.
2. For details of posts and blocks used to construct guard railing, see Standard Plan A77C.
3. Guard railing post spacing to be 1905 mm center to center, except as otherwise noted.
4. Top of rail to be 685 mm above the ground line or shoulder surfacing under the rail element.
5. For guard railing approach flares, see Standard Plans A77D and A77E.
6. For embankment widening details to accommodate guard railing approach flares, see Standard Plan A77F.
7. For guard railing end anchor details, see Standard Plans A77G and A77I.
8. For guard railing connection details to bridge railing, retaining walls and abutments, see Standard Plan A77J.
9. For guard railing connection details to bridge sidewalks and curbs, see Standard Plan A77K.
10. For dike positioning with guard railing installations, see Standard Plan A77F.
11. Direction of traffic indicated by ⟶.
12. Where conditions require the bolt to be installed in the opposite direction from that shown in Section A-A or where a 16 mm threaded rod is required in place of the bolt, no more than 13 mm of the thread of the bolt or rod is to be exposed on the traffic side of the rail element.
13. Additional holes in wood post and steel block are required for potential adjustments of railing heights.

DIST	COUNTY	ROUTE	KILOMETER POST TOTAL PROJECT	SHEET NO.	TOTAL SHEETS

Metric

Donald E. Fogle
REGISTERED CIVIL ENGINEER

July 1, 1997
PLANS APPROVAL DATE

REGISTERED PROFESSIONAL ENGINEER Donald E. Fogle No. C34637 Exp. 9-30-99 CIVIL STATE OF CALIFORNIA

The State of California or its officers or agents shall not be responsible for the accuracy or completeness of electronic copies of this plan sheet.

STATE OF CALIFORNIA
DEPARTMENT OF TRANSPORTATION

METAL BEAM GUARD RAILING

NO SCALE

ALL DIMENSIONS ARE IN MILLIMETERS UNLESS OTHERWISE SHOWN

A77A

STD. PLAN A77A

Return to Table of Contents

DIST	COUNTY	ROUTE	KILOMETER POST TOTAL PROJECT	SHEET NO.	TOTAL SHEETS

California Metric

Donald E Fogle
REGISTERED CIVIL ENGINEER

July 1, 1997
PLANS APPROVAL DATE

REGISTERED PROFESSIONAL ENGINEER Donald E. Fogle No. C34637 Exp. 9-30-99 CIVIL STATE OF CALIFORNIA

The State of California or its officers or agents shall not be responsible for the accuracy or completeness of electronic copies of this plan sheet.

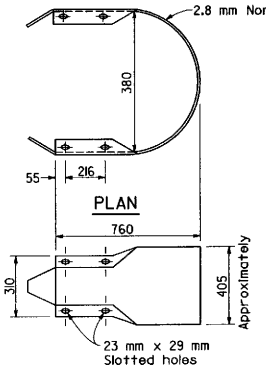

ELEVATION

RETURN SECTION

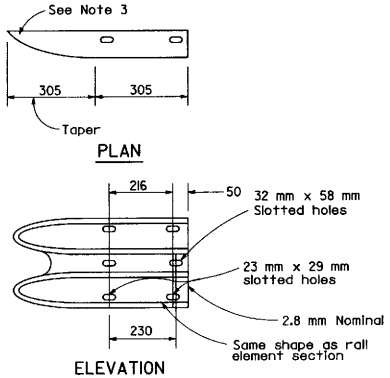

ELEVATION

END SECTION DETAILS

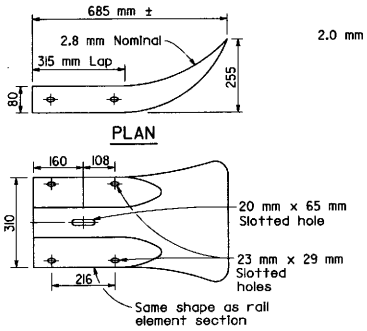

ELEVATION

TERMINAL SECTION

(TYPE B)

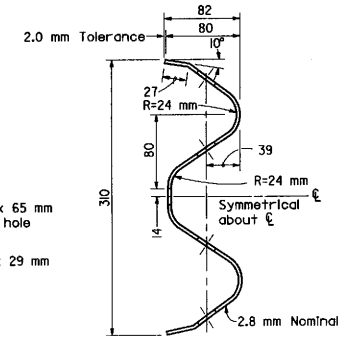

SECTION THRU

RAIL ELEMENT

NOTES

1. Terminal sections not to be installed on the trailing end of guard railing constructed adjacent to one-way roadways.
2. Back-up plate to be used between guard rail element and steel block on steel post where there is no rail element splice. See Standard Plan A77A.
3. End Section may be cut from Terminal Section (Type B) or fabricated.
4. Use for nested railing applications.
5. Terminal Section 'Type A' has been deleted.

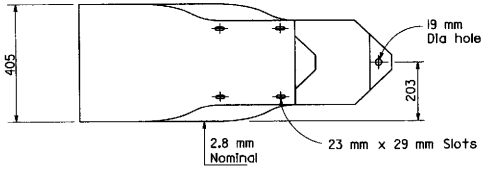

ELEVATION

TERMINAL SECTION

(TYPE C)

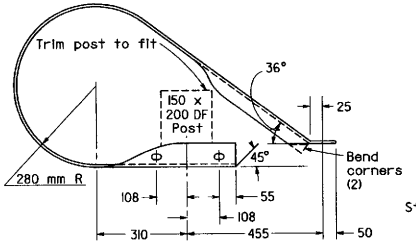

PLAN

TERMINAL SECTION

(TYPE C)

DETAIL A

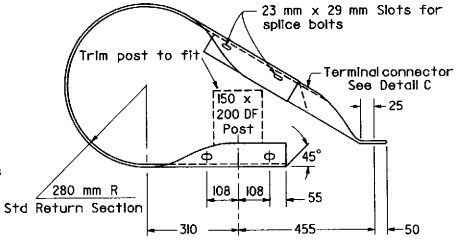

PLAN

OPTIONAL DESIGN TERMINAL SECTION

(TYPE C)

DETAIL B

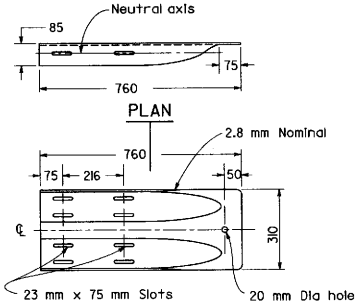

ELEVATION

TERMINAL CONNECTOR FOR

OPTIONAL DESIGN TERMINAL SECTION

(TYPE C)

DETAIL C

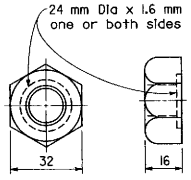

16 mm Ø RECESS NUT

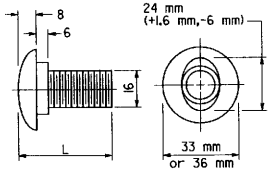

16 mm Ø BUTTON HEAD BOLT

L	THREAD LENGTH
35 mm	full thread length
50 mm	45 mm Min thread length
255 mm	100 mm Min thread length
460 mm	100 mm Min thread length
••70 mm	50 mm Min thread length
••480 mm	100 mm Min thread length

•• SEE NOTE 4

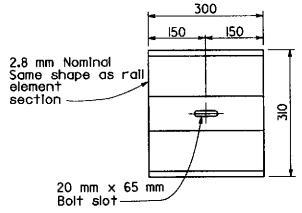

BACK-UP PLATE

See Note 2

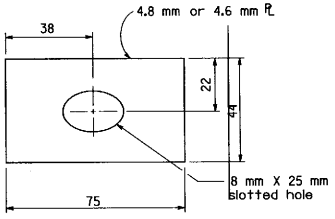

FLAT PLATE WASHER

STATE OF CALIFORNIA
DEPARTMENT OF TRANSPORTATION

METAL BEAM GUARD RAILING STANDARD HARDWARE

NO SCALE

ALL DIMENSIONS ARE IN MILLIMETERS UNLESS OTHERWISE SHOWN

A77B

Return to Table of Contents

DIST	COUNTY	ROUTE	KILOMETER POST TOTAL PROJECT	SHEET NO.	TOTAL SHEETS

Metric

Donald E Fogle
REGISTERED CIVIL ENGINEER

July 1, 1997
PLANS APPROVAL DATE

REGISTERED PROFESSIONAL ENGINEER Donald E. Fogle No. C34637 Exp. 9-30-99 CIVIL STATE OF CALIFORNIA

The State of California or its officers or agents shall not be responsible for the accuracy or completeness of electronic copies of this plan sheet.

NOTES

1. All holes in wood posts and blocks shall be 20 mm dia ± 1.6 mm.
2. All holes in steel posts and blocks shall be 21 mm dia maximum.
3. Contractor may submit alternative steel post details for Engineer's approval.
4. Dimensions shown for wood post are nominal.

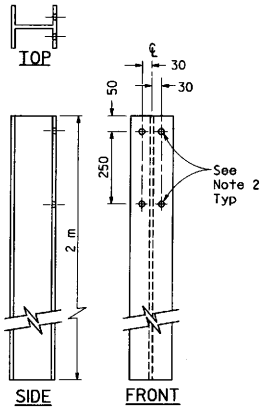

MW 150 x 22 STEEL POST

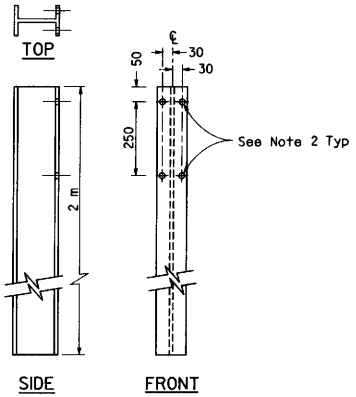

MW 150 x 14 STEEL POST

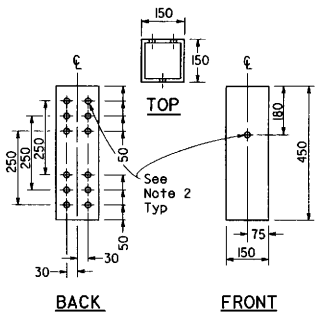

150 mm x 150 mm x 450 mm
(4.8 mm THICK)
NOMINAL DIMENSIONS
TUBULAR STEEL BLOCK

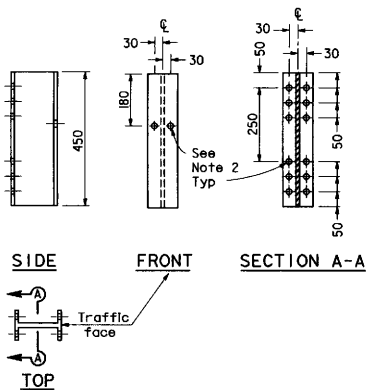

MW 150 X 14 STEEL BLOCK

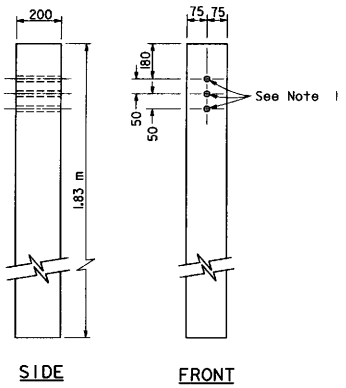

150 mm x 200 mm
DOUGLAS FIR POST

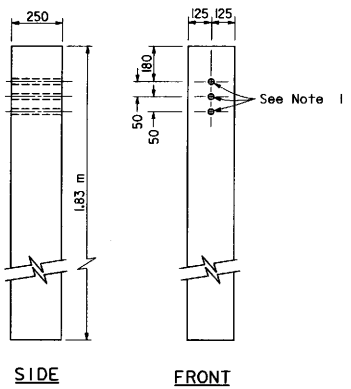

150 mm x 200 mm
DOUGLAS FIR POST

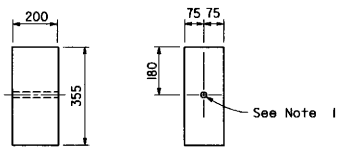

150 mm x 200 mm
DOUGLAS FIR POST

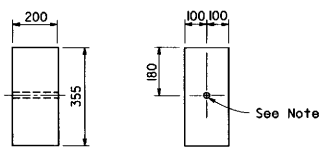

150 mm x 200 mm
DOUGLAS FIR POST

STATE OF CALIFORNIA
DEPARTMENT OF TRANSPORTATION

METAL BEAM GUARD RAILING POSTS AND BLOCKS

NO SCALE

ALL DIMENSIONS ARE IN MILLIMETERS UNLESS OTHERWISE SHOWN

A77C

STD. PLAN A77C

Return to Table of Contents

DIST	COUNTY	ROUTE	KILOMETER POST TOTAL PROJECT	SHEET NO.	TOTAL SHEETS

Caltrans Metric

Donald E Fogle
REGISTERED CIVIL ENGINEER

July 1, 1997
PLANS APPROVAL DATE

REGISTERED PROFESSIONAL ENGINEER Donald E. Fogle No. C34637 Exp. 9-30-99 CIVIL STATE OF CALIFORNIA

The State of California or its officers or agents shall not be responsible for the accuracy or completeness of electronic copies of this plan sheet.

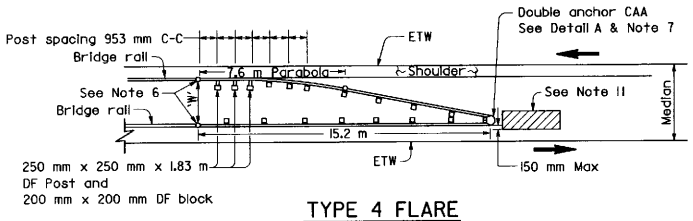

TYPE 4 FLARE

See Note 3

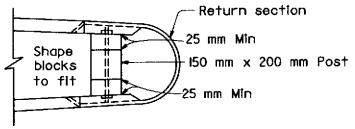

DETAIL A

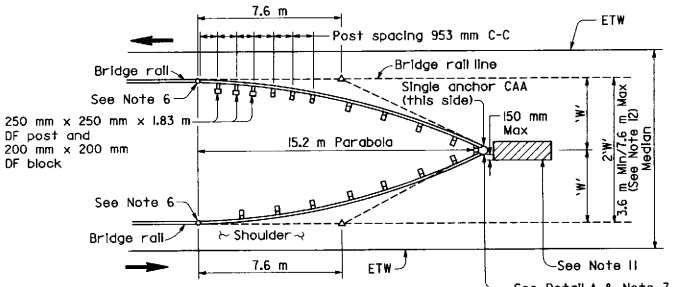

TYPE 3 FLARE

See Note 3

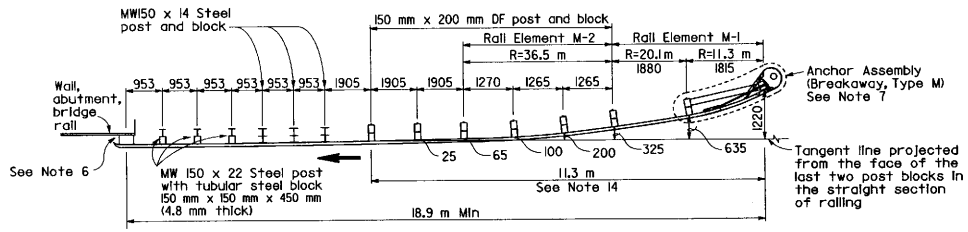

TYPE IM FLARE

(STEEL POST INSTALLATION)
See Notes 9 and 14

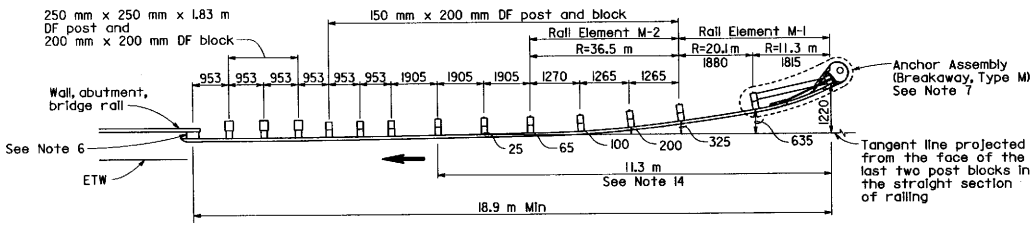

TYPE IM FLARE

(WOOD POST INSTALLATION)
See Notes 9 and 14

CAA = Cable Anchor Assembly

NOTES

1. Post, blocks and hardware to be used are shown on Standard Plans A77B and A77C.
2. Guard rail post spacing to be 1905 mm center to center, except as otherwise noted.
3. Except as noted, posts shown are 150 mm x 200 mm DF. MW 150 x 14 steel posts and blocks may be used for 150 mm x 200 mm DF posts and blocks where applicable and when specified. Where 250 mm x 250 mm DF post and 200 mm x 200 mm DF blocks are shown, MW 150 x 22 steel posts and tubular steel 150 mm x 150 mm x 450 mm blocks (4.8 mm thick) may be used where applicable and when specified.
4. Top of rail to be 685 mm above ground line or shoulder surfacing under the rail element.
5. Direction of traffic indicated by →
6. For connection details see Standard Plan A77J or A77K.
7. For end anchor details see Standard Plan A77G and Standard Plan A77I.
8. Terminal Sections not to be installed on trailing end of guard railing constructed adjacent to one-way roadways.
9. The 11.3 m flared portion of Type IM flare is used at the traffic approach end of guard railing for embankment installations.
10. For embankment widening details to accommodate approach flares, see Standard Plan A77F.
11. Sand filled crash cushion, as shown on Standard Plan A81, or other crash cushion approved by the Engineer is required for Type 3 and 4 flares, when the end of the guard railing is within 9.0 m of the edge of traveled way (ETW) of approaching traffic.
12. When width 'W' exceeds 3.8 m; to calculate the length of parabolic flare use "L=3w" and round to nearest 3.8 m.
13. Type 2 Flare has been deleted.
14. For additional requirements for the 11.3 m flared portion of the Type IM flare installations see Standard Plan A77G and the Special Provisions.

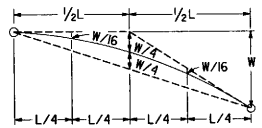

TYPICAL PARABOLIC LAYOUT

STATE OF CALIFORNIA
DEPARTMENT OF TRANSPORTATION

GUARD RAILING FLARES

NO SCALE

ALL DIMENSIONS ARE IN
MILLIMETERS UNLESS OTHERWISE SHOWN

A77D

Return to Table of Contents

DIST	COUNTY	ROUTE	KILOMETER POST TOTAL PROJECT	SHEET NO.	TOTAL SHEETS

Donald E Fogle
REGISTERED CIVIL ENGINEER

July 1, 1997
PLANS APPROVAL DATE

REGISTERED PROFESSIONAL ENGINEER Donald E. Fogle No. C34637 Exp. 9-30-99 CIVIL STATE OF CALIFORNIA

The State of California or its officers or agents shall not be responsible for the accuracy or completeness of electronic copies of this plan sheet.

Caltrans Metric

NOTES

1. Post, blocks and hardware to be used are shown on Standard Plan A77B and A77C.
2. Guard railing post spacing to be 1.905 m center to center, except as noted.
3. Except as noted, posts and blocks shown are 150 mm x 200 mm DF. MW 150 mm x 14 mm steel posts and blocks may be used where applicable and when specified. Where 250 mm x 250 mm DF posts and 200 mm x 200 mm DF blocks are shown, MW 150 mm x 22 mm steel post and tubular steel blocks 150 mm x 150 mm x 450 mm (4.8 mm thick) may be used where applicable and when specified.
4. Top of railing to be 685 mm above ground line or shoulder surfacing under the rail element.
5. A 1.2 m minimum clearance is required between the face of the railing and the face of a fixed object located directly behind a guard railing post. Where a fixed object is behind the railing, but not directly behind a guard railing post, a 910 mm minimum clearance is required between the face of the railing and the face of the fixed object. Where minumum clearances cannot be obtained, construct guard railing as shown in "Approach Railing Transition Details for Fixed Objects" on this plan.
6. Direction of traffic indicated by ➡.
7. For connection details see Standard Plans A77J and A77K.
8. For end anchor details see Standard A77G and Standard Plan A77I .
9. Terminal sections not to be installed on trailing end of guard railing constructed adjacent to one-way roadways.
10. Type 7 flare has been deleted.
11. Sand filled crash cushion, as shown on Standard Plan A81, or other crash cushion approved by the Engineer, is required for Type 5 and 6 flares, when the end of the guard railing is within 9.0 m of the edge of traveled way (ETW) of approaching traffic.
12. When width 'W' exceeds 3.8 m; to calculate the length of parabolic flare use "L=3W" and round to nearest 3.8 m. Use "L=3W" and round to nearest 3.8 m.

    For additional requirements for the 11.3 m flared portion of the Type 8M flare installations see Standard Plan A77G and the Special Provisions.
13.

CAA = Cable Anchor Assembly

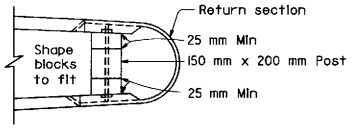

DETAIL A

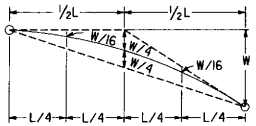

TYPICAL PARABOLIC LAYOUT

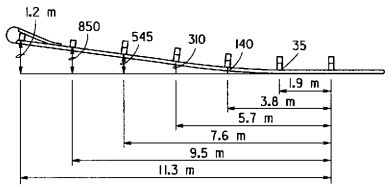

11.4 m PARABOLIC OFFSETS

(Parabolic offsets not to be used with Type 8M flares.)

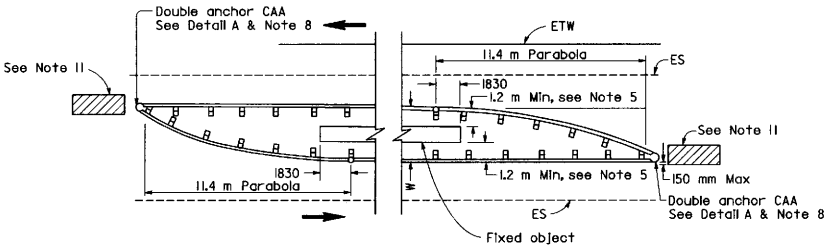

TYPE 5 FLARE

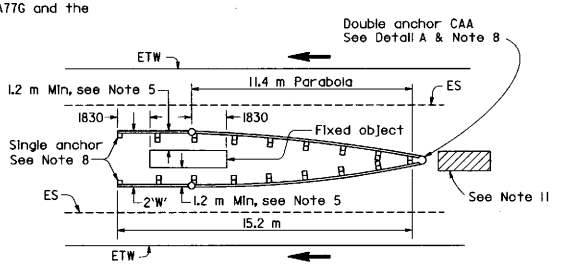

TYPE 6 FLARE

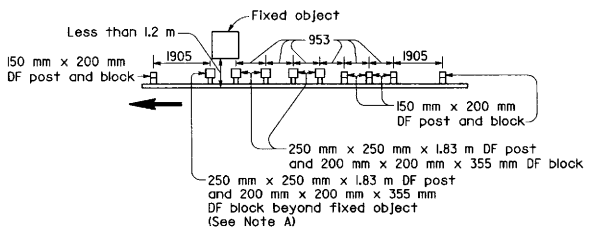

Note A. For a series of fixed objects (bridge columns, overhead sign supports, etc.) additional 250 mm x 250 mm 1.83 DF post with 200 mm x 200 mm x 355 mm DF blocks at 953 mm center to center spacing are to be used between fixed objects.

APPROACH RAILING TRANSITION DETAIL FOR FIXED OBJECT

Use with Type 5, 6, and 8M flares where minimum clearances specified in Note 5 cannot be obtained between the face of the guard railing and fixed object(s).

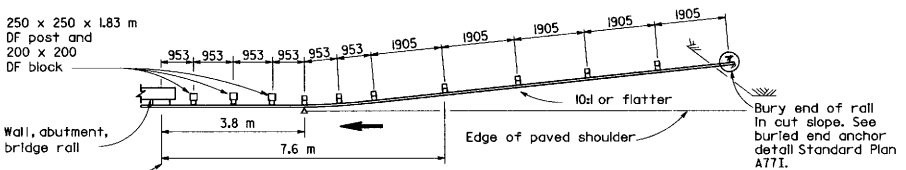

TYPE 9 FLARE

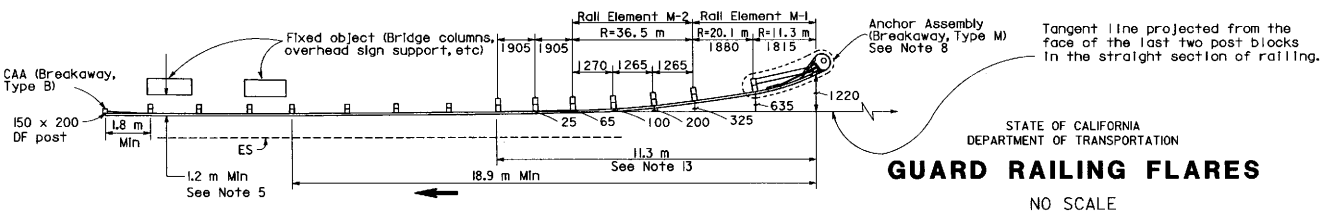

TYPE 8M FLARE

See Note 13

STATE OF CALIFORNIA
DEPARTMENT OF TRANSPORTATION

GUARD RAILING FLARES

NO SCALE

ALL DIMENSIONS ARE IN MILLIMETERS UNLESS OTHERWISE SHOWN

A77E

STD. PLAN A77E

Return to Table of Contents

DIST	COUNTY	ROUTE	KILOMETER POST TOTAL PROJECT	SHEET NO.	TOTAL SHEETS

Donald E Fogle
REGISTERED CIVIL ENGINEER

July 1, 1997
PLANS APPROVAL DATE

REGISTERED PROFESSIONAL ENGINEER Donald E. Fogle No. C34637 Exp. 9-30-99 CIVIL STATE OF CALIFORNIA

The State of California or its officers or agents shall not be responsible for the accuracy or completeness of electronic copies of this plan sheet.

Metric

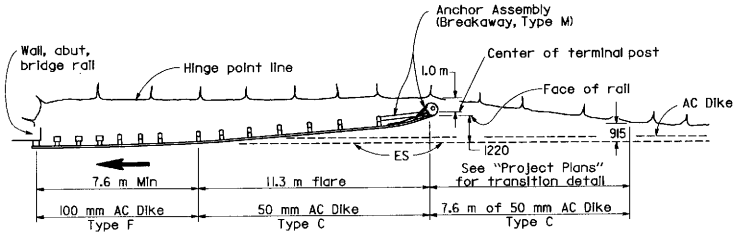

EMBANKMENT WIDENING AND DIKE PLACEMENT DIAGRAM

See Notes 1 and 2

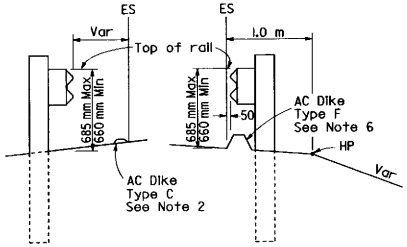

DIKE POSITIONING

(See Note 2)

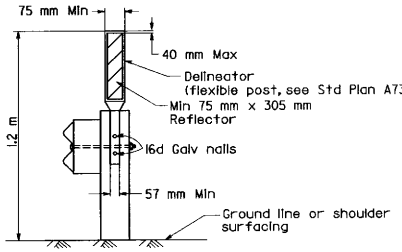

GUARD RAILING DELINEATION

See Note 4

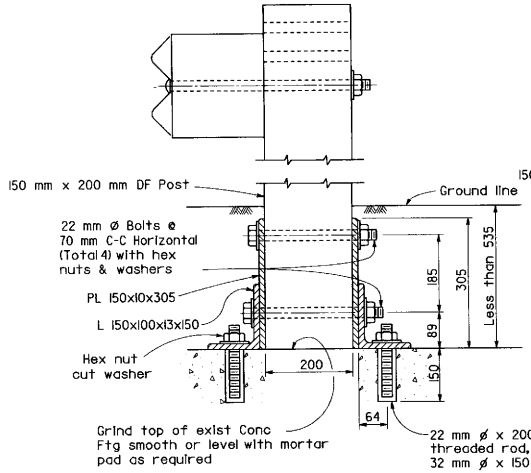

DETAIL A

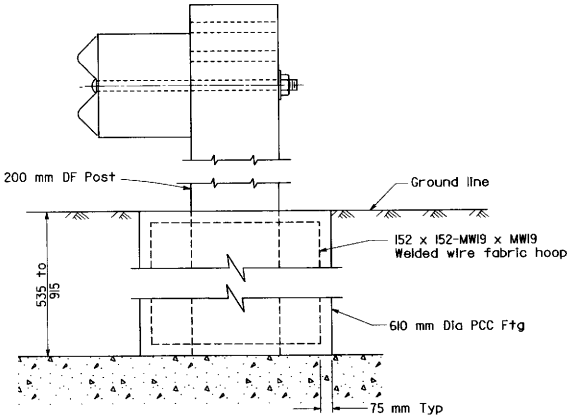

DETAIL B

Form socket in concrete to receive 150 mm x 200 mm post or place concrete around 150 mm x 200 mm post wrapped with one layer of 13 mm thick expanded polystyrene foam sheeting. Do not nail polystyrene to post. Post to be centered in concrete footing.

POST FOOTINGS

(See note 3)

Use where standard embedment of railing post is restricted by underground concrete facilities such as footing of walls, columns, etc. Use Detail A where embedment of post is less than 535 mm. Use Detail B where embedment of post is between 535 mm and 915 mm.

NOTES

1. For guard railing flare details, see Standard Plans A77D and A77E.
2. When necessary to place dike in front of face of guard railing, only Type C dike may be used. For dike details, see Standard Plan A87.
3. For standard railing post embedment, see Standard Plan A77A.
4. Guard railing delineation to be used where shown on the project plans.
5. Direction of traffic indicated by ⟶.
6. When dike or curb is placed under guard railing, the maximum height of the dike or curb shall be 100 mm. For dike and curb details, see Standard Plan A87. Plan A87.

STATE OF CALIFORNIA
DEPARTMENT OF TRANSPORTATION

METAL BEAM GUARD RAILING MISCELLANEOUS DETAILS

NO SCALE

ALL DIMENSIONS ARE IN MILLIMETERS UNLESS OTHERWISE SHOWN

A77F

STD. PLAN A77F

Return to Table of Contents

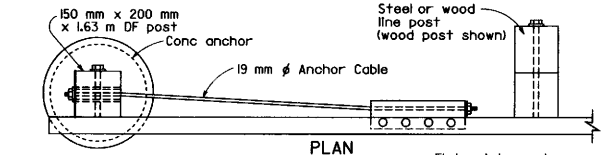

PLAN

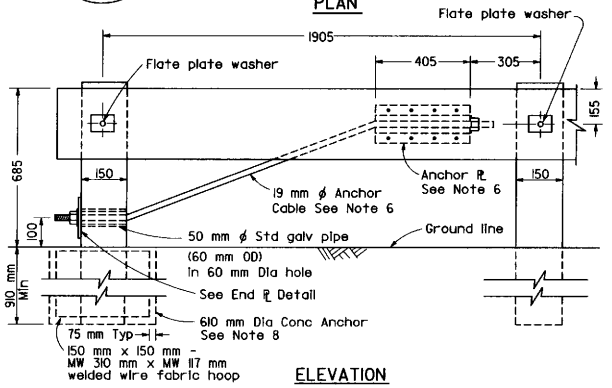

ELEVATION

CABLE ANCHOR ASSEMBLY (BREAKAWAY, TYPE B)

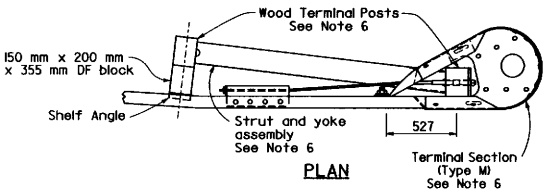

PLAN

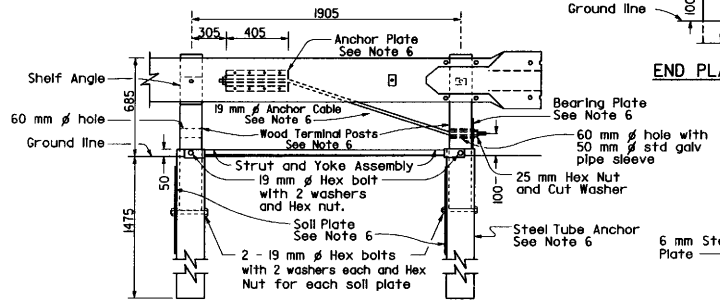

ELEVATION

ANCHOR ASSEMBLY (BREAKAWAY, TYPE M)

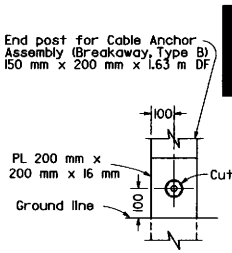

END PLATE DETAIL

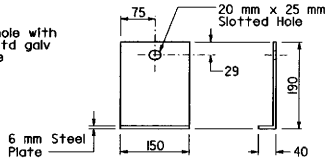

SHELF ANGLE

See Note 5

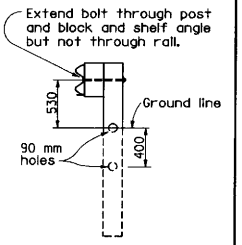

BREAKAWAY POST

(Post Nos. 3, 4, 5 and 6)

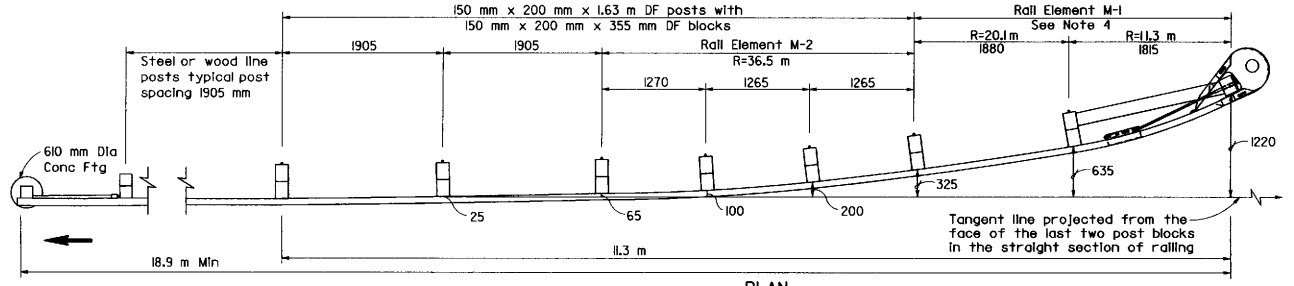

PLAN

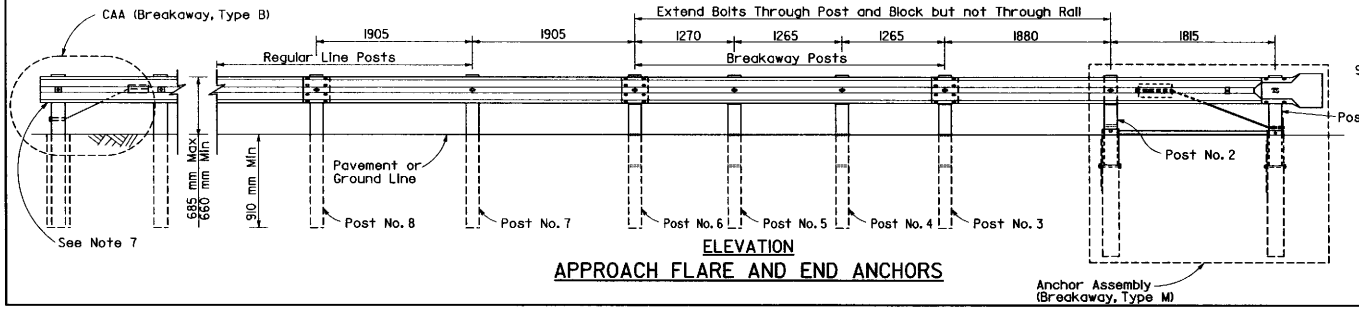

ELEVATION

APPROACH FLARE AND END ANCHORS

NOTES

1. For typical use of anchor assembly (Breakaway, Type M), see Standard Plans A77D and A77E.
2. Cable anchor assembly (Breakaway, Type B) is typically used on the trailing end of guard railing for embankment installations except two-way road beds less than 18 m in width.
3. Minor adjustments to post spacing and offsets may be required to to fit field conditions.
4. The rail element connecting post numbers 1, 2 and 3 has a compound bend with a radius of 11.3 m between post numbers 1 and 2, and a radius of 20.1m between post numbers 2 and 3. The radius changes at post number 2.
5. Shelf angles to support the rail element shall be installed on post numbers 2, 3, 4, 5 and 6 of the flare.
6. For details of the Terminal Section (Type M), wood terminal posts, steel tube anchors, soil plates, bearing plates, and strut and yoke assembly, see Standard Plan A77GA. For details of the anchor plate and 19 mm cable, see Standard Plan A77H.
7. Terminal sections not to be installed on trailing end of guard railing constructed adjacent to one-way roadway.
8. For concrete anchor, form socket in concrete to receive 150 mm x 200 mm post or place concrete around 150 mm x 200 mm post wrapped with one layer of 13 mm thick expanded polystyrene foam sheeting. Do not nail polystyrene to post. Post to be centered in concrete footing.
9. Direction of traffic indicated by ⟶.

DIST	COUNTY	ROUTE	KILOMETER POST TOTAL PROJECT	SHEET NO.	TOTAL SHEETS

Metric

Donald E Fogle
REGISTERED CIVIL ENGINEER

July 1, 1997
PLANS APPROVAL DATE

REGISTERED PROFESSIONAL ENGINEER Donald E. Fogle No. C34637 Exp. 9-30-99 CIVIL STATE OF CALIFORNIA

The State of California or its officers or agents shall not be responsible for the accuracy or completeness of electronic copies of this plan sheet.

STATE OF CALIFORNIA
DEPARTMENT OF TRANSPORTATION

GUARD RAILING END ANCHORS (BREAKAWAY)

NO SCALE

ALL DIMENSIONS ARE IN MILLIMETERS UNLESS OTHERWISE SHOWN

A77G

STD. PLAN A77G

Return to Table of Contents

DIST	COUNTY	ROUTE	KILOMETER POST TOTAL PROJECT	SHEET NO.	TOTAL SHEETS

Donald E Fogle
REGISTERED CIVIL ENGINEER

July 1, 1997
PLANS APPROVAL DATE

REGISTERED PROFESSIONAL ENGINEER
Donald E. Fogle
No. C34637
Exp. 9-30-99
CIVIL
STATE OF CALIFORNIA

The State of California or its officers or agents shall not be responsible for the accuracy or completeness of electronic copies of this plan sheet.

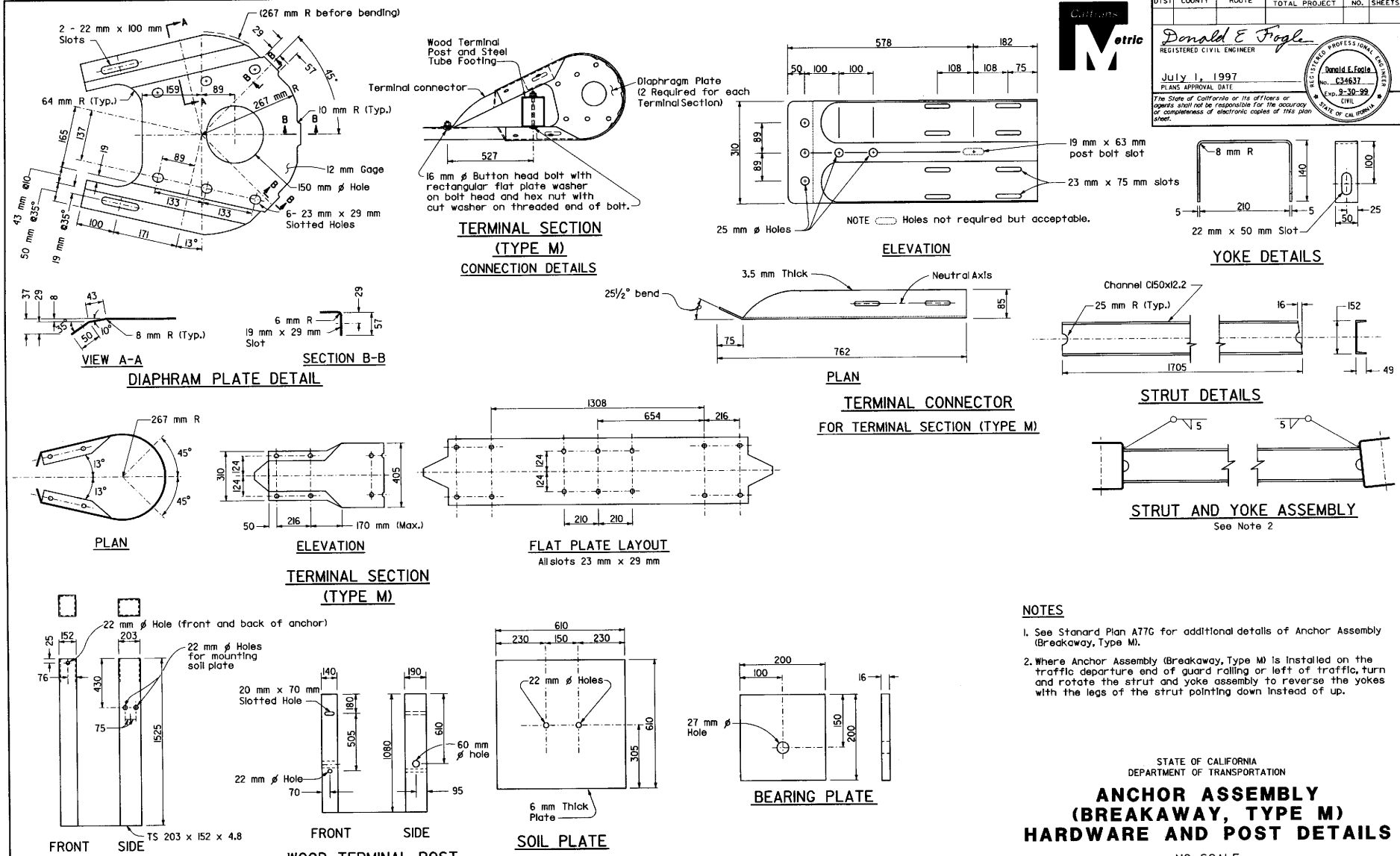

NOTES

1. See Stanard Plan A77G for additional details of Anchor Assembly (Breakaway, Type M).
2. Where Anchor Assembly (Breakaway, Type M) is installed on the traffic departure end of guard railing or left of traffic, turn and rotate the strut and yoke assembly to reverse the yokes with the legs of the strut pointing down instead of up.

STATE OF CALIFORNIA
DEPARTMENT OF TRANSPORTATION

ANCHOR ASSEMBLY (BREAKAWAY, TYPE M) HARDWARE AND POST DETAILS

NO SCALE

ALL DIMENSIONS ARE IN MILLIMETERS UNLESS OTHERWISE SHOWN

A77GA

Return to Table of Contents

DIST	COUNTY	ROUTE	KILOMETER POST TOTAL PROJECT	SHEET NO.	TOTAL SHEETS

Donald E Fogle
REGISTERED CIVIL ENGINEER

July 1, 1997
PLANS APPROVAL DATE

REGISTERED PROFESSIONAL ENGINEER
Donald E. Fogle
No. C34637
Exp. 9-30-99
CIVIL
STATE OF CALIFORNIA

The State of California or its officers or agents shall not be responsible for the accuracy or completeness of electronic copies of this plan sheet.

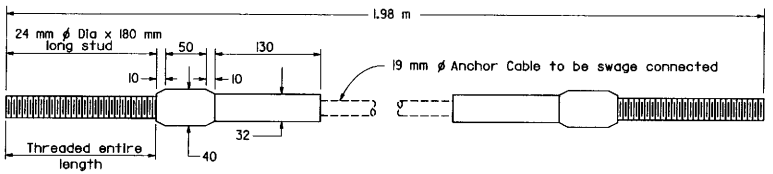

ANCHOR CABLE WITH SWAGED FITTING AND STUD
DETAIL E

NOTE

1. See Standard Plan A77G for Breakaway End Anchor details.

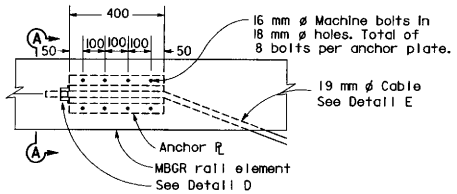

ANCHOR PLATE DETAIL

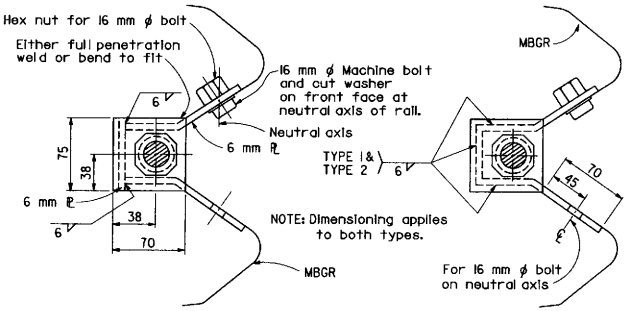

SECTION A-A
(ALTERNATIVE TYPE 1)

SECTION A-A
(ALTERNATIVE TYPE 2)

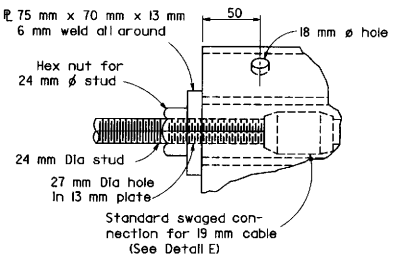

DETAIL D

STATE OF CALIFORNIA
DEPARTMENT OF TRANSPORTATION

GUARD RAILING END ANCHORS BREAKAWAY HARDWARE

NO SCALE

ALL DIMENSIONS ARE IN MILLIMETERS UNLESS OTHERWISE SHOWN

A77H

STD. PLAN A77H

Return to Table of Contents

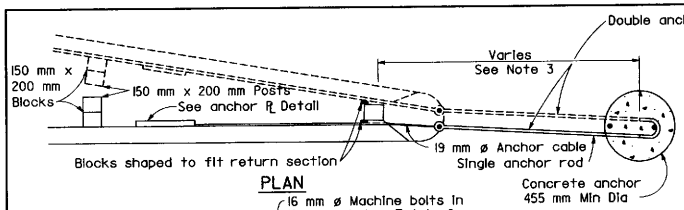

PLAN

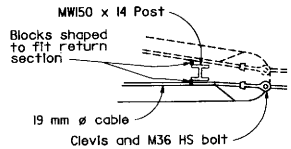

PLAN

NOTES

1. For typical use of end anchors shown on this plan, See Standard Plans A77D and A77E.
2. Anchor cable to be parallel to guard railing for straight runs of rail. Anchor cable may have angle point at anchor plate if guard rail is curved.
3. Distance between end post and concrete anchor is 1.7 m with terminal section. May be less than 1.7 m with return sections if separate rods connect to concrete anchor.
4. Anchor rod hooks to be in contact with anchor reinforcement when concrete is placed. Wire ties may be used to position anchor rods.
5. Cable clip connection (Detail A) or clevis and bolt connection (Detail B) to be used with wood post guard railing installation. For steel post guard railing installations, clevis and bolt connection (Detail B) is to be used. Other alternative for attaching cable to anchor rod must be approved by the Engineer.

California Metric

DIST	COUNTY	ROUTE	KILOMETER POST TOTAL PROJECT	SHEET NO.	TOTAL SHEETS

Donald E Fogle
REGISTERED CIVIL ENGINEER

July 1, 1997
PLANS APPROVAL DATE

REGISTERED PROFESSIONAL ENGINEER Donald E. Fogle No. C34637 Exp. 9-30-99 CIVIL STATE OF CALIFORNIA

The State of California or its officers or agents shall not be responsible for the accuracy or completeness of electronic copies of this plan sheet.

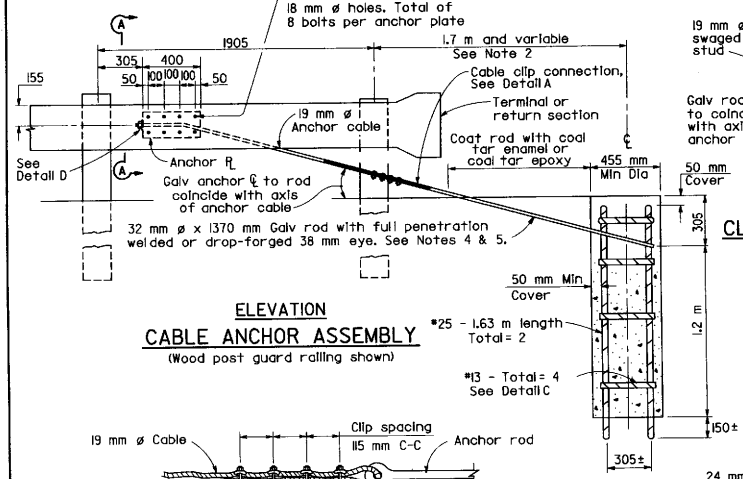

ELEVATION

CABLE ANCHOR ASSEMBLY

(Wood post guard railing shown)

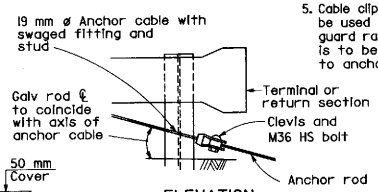

ELEVATION

CLEVIS AND BOLT CONNECTION

DETAIL B

(Steel post guard railing shown)
See Note 5

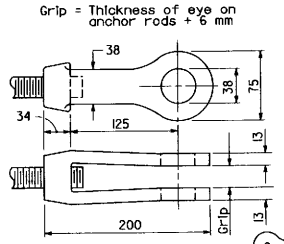

CLEVIS

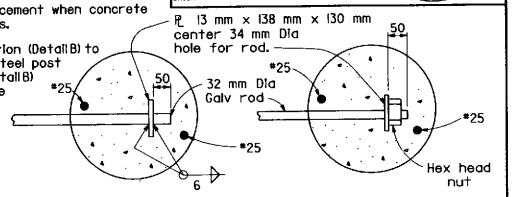

OPTIONAL ENDS ON SINGLE ANCHOR ROD

(Not to be used foe double anchors)

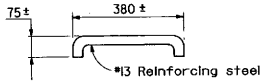

DETAIL C

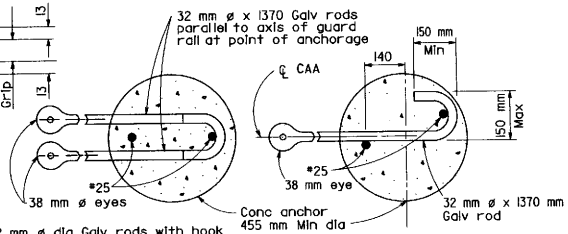

NOTE:
Use two 32 mm ø dia Galv rods with hook and eye for double guard rail anchor.

DOUBLE ANCHOR SINGLE ANCHOR

ANCHOR RODS

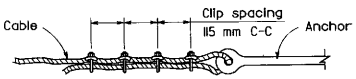

"U" bolts of clip on short end of cable only
"U" bolts tightened to 70 N·m torque

CABLE CLIP CONNECTION

DETAIL A
See Note 5

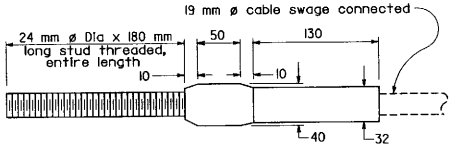

ANCHOR CABLE WITH SWAGED FITTING AND STUD

DETAIL E

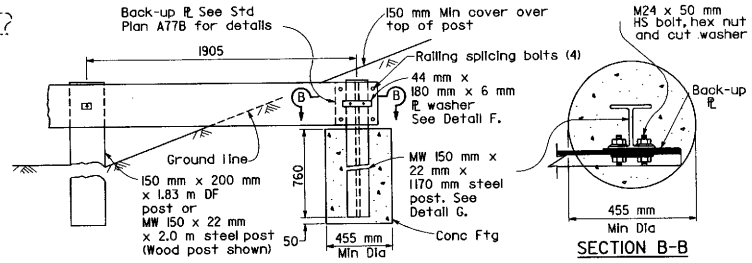

SECTION B-B

BURIED POST ANCHOR

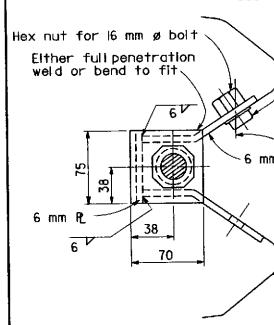

SECTION A-A
(ALTERNATIVE TYPE 1)

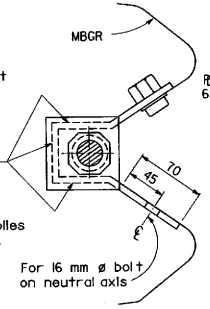

NOTE: Dimensioning applies to both types.

SECTION A-A
(ALTERNATIVE TYPE 2)

ANCHOR PLATE DETAILS

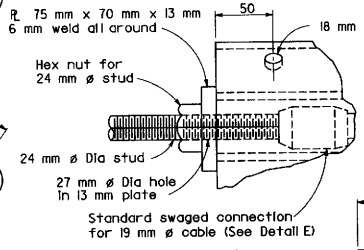

DETAIL D

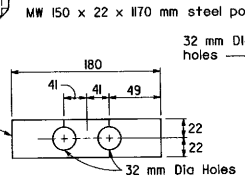

DETAIL F

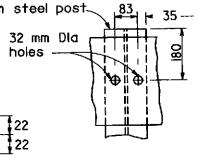

DETAIL G

STATE OF CALIFORNIA
DEPARTMENT OF TRANSPORTATION

BARRIER AND GUARD RAILING END ANCHORS

NO SCALE

ALL DIMENSIONS ARE IN MILLIMETERS UNLESS OTHERWISE SHOWN

A77I

STD. PLAN A77I

Return to Table of Contents

DIST	COUNTY	ROUTE	KILOMETER POST TOTAL PROJECT	SHEET NO.	TOTAL SHEETS

Metric

Donald E Fogle
REGISTERED CIVIL ENGINEER

July 1, 1997
PLANS APPROVAL DATE

REGISTERED PROFESSIONAL ENGINEER Donald E. Fogle No. C34637 Exp. 9-30-99 CIVIL STATE OF CALIFORNIA

The State of California or its officers or agents shall not be responsible for the accuracy or completeness of electronic copies of this plan sheet.

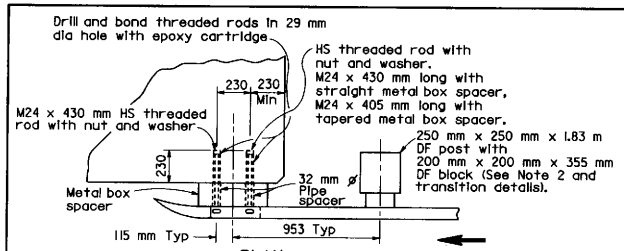

PLAN

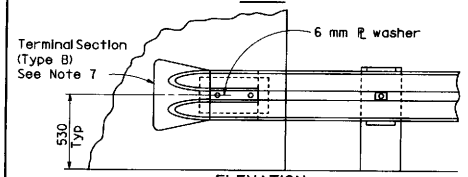

ELEVATION

GUARD RAILING END CONNECTION TO WALL OR ABUTMENT FACE

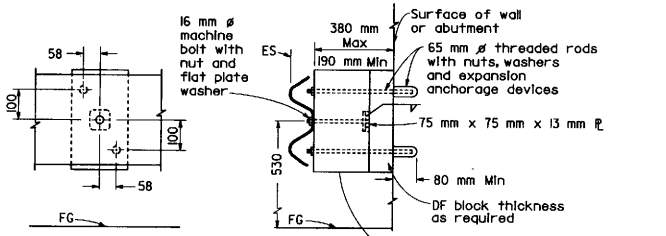

FRONT VIEW

SIDE VIEW

ELEVATION

GUARD RAILING ANCHORAGE TO WALL OR ABUTMENT FACE

(Use this type of anchorage where guard railing is required across face of wall or abutment)
See Notes 9 and 10

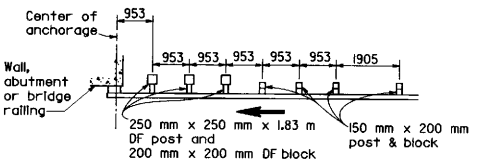

APPROACH RAILING TRANSITION

Wood post and blocks

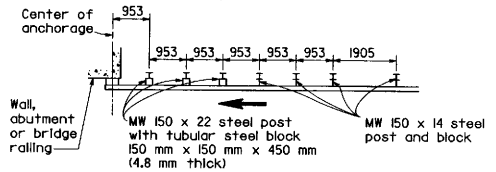

APPROACH RAILING TRANSITION

Steel post and blocks

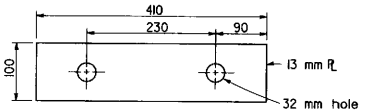

PLATE WASHER

(For backside of bridge railing)

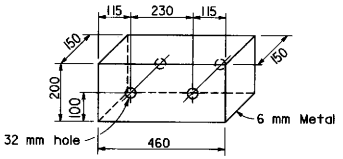

STRAIGHT METAL BOX SPACER

Use where approach guard railing is parallel to bridge railing, wall or abutment face at the point of connection.
See Note 6

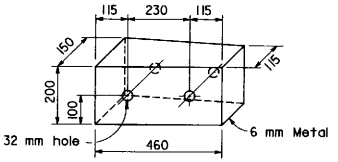

TAPERED METAL BOX SPACER

Use where approach guard railing is not parallel to bridge railing, wall or abutment face at the point of connection.
See Note 6

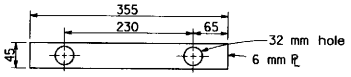

PLATE WASHER

(For face of guard railing)

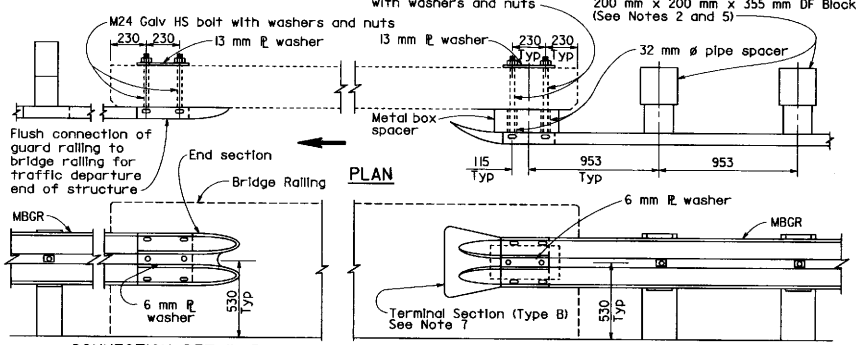

CONNECTION DETAIL B
See Note 8

CONNECTION DETAIL A
See Note 8

ELEVATION

GUARD RAILING CONNECTION TO BRIDGE RAILING

NOTES

1. These connection details apply to bridge railings, abutments and retaining walls. For additional connection details for bridge railing, see Standard Plan B11-53 and B11-54 and the project plans. See Standard Plan A77K for connection details to bridges with sidwalks or curbs.
2. Where 250 mm x 250 mm DF post and 200 mm x 200 mm DF blocks are shown, MW 150 mm x 22 steel posts and tubular steel blocks 150 mm x 150 mm x 450 mm (4.8 mm thick) may be used where applicable and when specified.
3. Additional details of post, blocks and hardware are shown on Standard Plans A77B, A77C and A77H.
4. Direction of traffic indicated by →
5. For traffic approach railing details, see Type 1 M flare on Standard Plan A77D and the "Approach Railing Transition Details" on this plan.
6. When metal box spacer is installed, place 32 mm ø x 125 mm and 32 mm ø x 100 mm pipe spacers on M24 bolts passing through interior of tapered box spacer and 32 mm ø x 130 mm pipe spacers on M24 bolts passing through interior of straight box spacer.
7. Terminal sections not to be installed on trailing end of approach guard railing constructed adjacent to one-way roadways. When terminal section is not installed, use backup plate between rail element and metal box spacer. See Standard Plan A77B for backup plate details.
8. In addition to the use of "Connection Detail B" for traffic departure ends of structure, "Connection Detail B" shall be used on the traffic approach ends of structures on two-way roadways which are 18 m or less in width. Where "Connection Detail B" is used at the traffic approach ends of structures, the guard railing shall be transitioned to the bridge railing as shown in the "Approach Railing Transition Details" on this plan.
9. Use timber shims without posts where clearance between rail element and wall or abutment is less than 380 mm.
10. Do Not attach railing to bridge columns. Use separate posts as shown on Standard Plan A77E.

STATE OF CALIFORNIA
DEPARTMENT OF TRANSPORTATION

GUARD RAILING CONNECTIONS TO BRIDGE RAILINGS, RETAINING WALLS AND ABUTMENTS

NO SCALE

ALL DIMENSIONS ARE IN MILLIMETERS UNLESS OTHERWISE SHOWN

A77J

STD. PLAN A77J

Return to Table of Contents

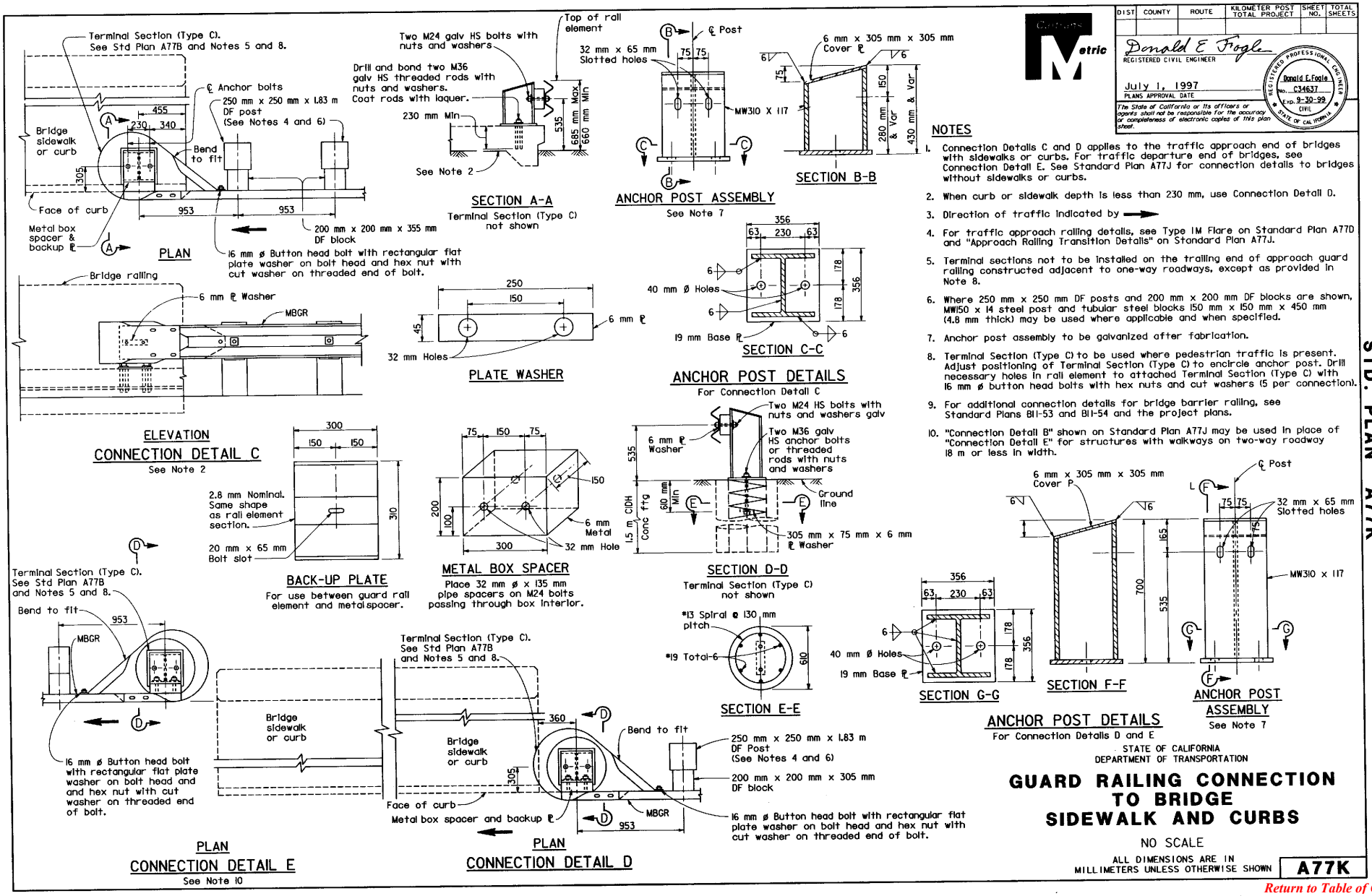

DIST	COUNTY	ROUTE	KILOMETER POST TOTAL PROJECT	SHEET NO.	TOTAL SHEETS

Donald E Fogle
REGISTERED CIVIL ENGINEER
July 1, 1997
PLANS APPROVAL DATE

REGISTERED PROFESSIONAL ENGINEER Donald E. Fogle No. C34637 Exp. 9-30-99 CIVIL STATE OF CALIFORNIA

The State of California or its officers or agents shall not be responsible for the accuracy or completeness of electronic copies of this plan sheet.

NOTES

1. Connection Details C and D applies to the traffic approach end of bridges with sidewalks or curbs. For traffic departure end of bridges, see Connection Detail E. See Standard Plan A77J for connection details to bridges without sidewalks or curbs.
2. When curb or sidewalk depth is less than 230 mm, use Connection Detail D.
3. Direction of traffic indicated by ⟶
4. For traffic approach railing details, see Type 1M Flare on Standard Plan A77D and "Approach Railing Transition Details" on Standard Plan A77J.
5. Terminal sections not to be installed on the trailing end of approach guard railing constructed adjacent to one-way roadways, except as provided in Note 8.
6. Where 250 mm x 250 mm DF posts and 200 mm x 200 mm DF blocks are shown, MW150 x 14 steel post and tubular steel blocks 150 mm x 150 mm x 450 mm (4.8 mm thick) may be used where applicable and when specified.
7. Anchor post assembly to be galvanized after fabrication.
8. Terminal Section (Type C) to be used where pedestrian traffic is present. Adjust positioning of Terminal Section (Type C) to encircle anchor post. Drill necessary holes in rail element to attached Terminal Section (Type C) with 16 mm ø button head bolts with hex nuts and cut washers (5 per connection).
9. For additional connection details for bridge barrier railing, see Standard Plans B11-53 and B11-54 and the project plans.
10. "Connection Detail B" shown on Standard Plan A77J may be used in place of "Connection Detail E" for structures with walkways on two-way roadway 18 m or less in width.

STATE OF CALIFORNIA
DEPARTMENT OF TRANSPORTATION

GUARD RAILING CONNECTION TO BRIDGE SIDEWALK AND CURBS

NO SCALE

ALL DIMENSIONS ARE IN MILLIMETERS UNLESS OTHERWISE SHOWN

A77K

STD. PLAN A77K

Return to Table of Contents

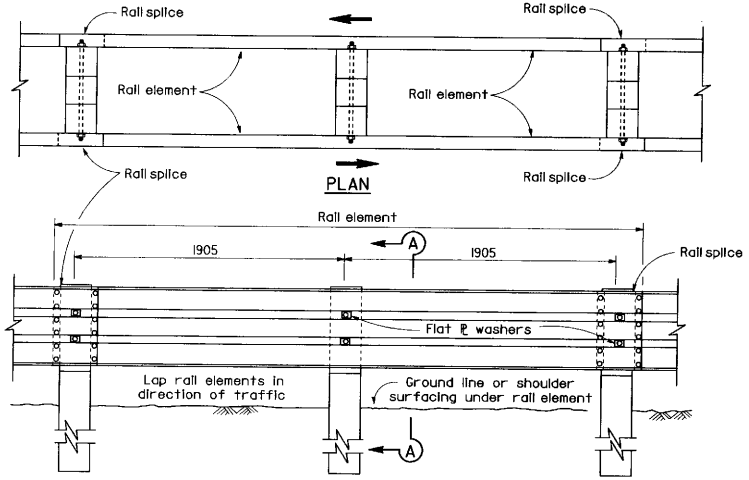

ELEVATION

DOUBLE THRIE BEAM BARRIER

(Wood post and blocks)
See Note 1

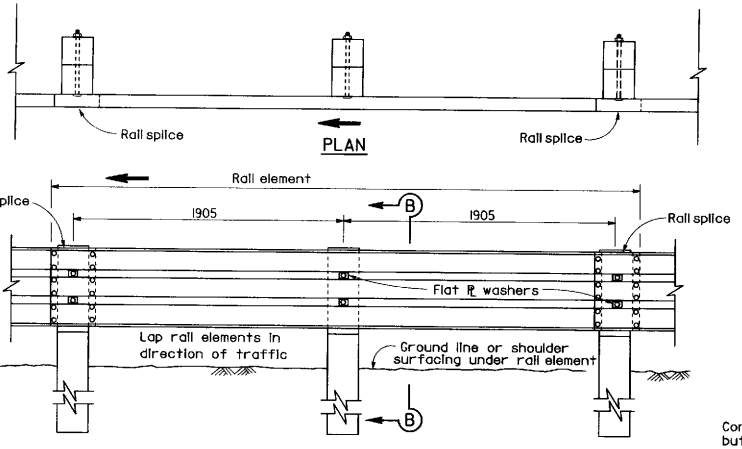

ELEVATION

SINGLE THRIE BEAM BARRIER

(Wood post and blocks)
See Note 1

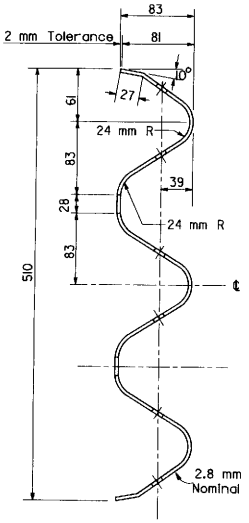

SECTION THRU RAIL ELEMENT

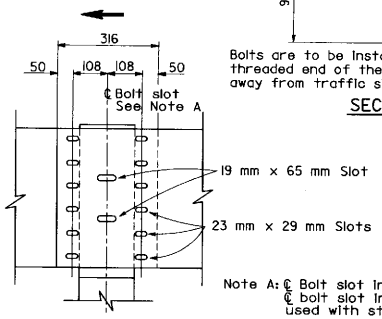

Note A: ℄ Bolt slot in wood post or ℄ bolt slot in steel block used with steel post.

ELEVATION

RAIL ELEMENT SPLICE DETAIL

Connect the overlapped ends of the thrie beam rail elements with 16 mm ø x 35 mm button head ovalshoulder bolts inserted into the 23 mm x 29 mm slots and bolted together with 16 mm ø x 35 mm recessed hex nuts. A total of 12 bolts and nuts are to be used at each rail splice connection. The ends of the rail elements are to be overlapped in the direction of traffic (see details). Where a terminal section is to be attached to the end of a rail element, a totalof 4 of the above described splice bolts and nuts are to be used. Where a return section is to be attached to the ends of rail elements, a totalof 8 of the above described splice bolts and nuts are to be used.

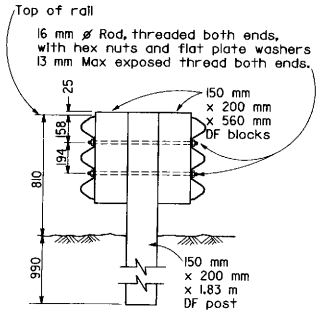

SECTION A-A

See Note 9

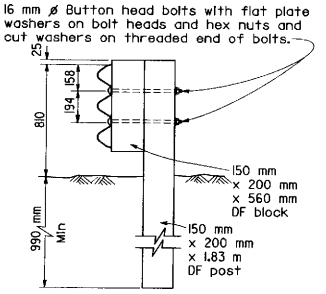

Bolts are to be installed as shown so that the threaded end of the bolts and nuts are placed away from traffic side of rail.

SECTION B-B

NOTES

1. For details of steel post and block thrie beam barrier, see Standard Plan A78B.
2. For details of standard hardware, posts and blocks used to construct thrie beam barrier, see Standard Plan A78C.
3. Thrie beam barrier post spacing to be 1905 mm center to center, except as otherwise noted.
4. Top of barrier rail to be 810 mm above ground line or shoulder surfacing under the rail element.
5. For barrier end anchors and barrier connections, see Standard Plans A78E, A78F and A78G.
6. For connection to Concrete Barrier (Type 50), see Standard Plans A78H.
7. Where standard embedment of barrier post is restricted by underground concrete facilities such as footing of walls, columns, etc., use post footing details on Standard Plan A77F.
8. For details of thrie beam barrier on bridge and thrie beam barrier at fixed object, see Standard Plan A78D.
9. Where offset roadway grades are encountered and height of rail element for each roadway cannot be obtained as shown in Section A-A, use saw tooth installation as shown on Standard Plan A78B.
10. Direction of traffic indicated by →

Caltrans Metric

DIST	COUNTY	ROUTE	KILOMETER POST TOTAL PROJECT	SHEET NO.	TOTAL SHEETS

Donald E Fogle
REGISTERED CIVIL ENGINEER

July 1, 1997
PLANS APPROVAL DATE

REGISTERED PROFESSIONAL ENGINEER Donald E. Fogle No. C34637 Exp. 9-30-99 CIVIL STATE OF CALIFORNIA

The State of California or its officers or agents shall not be responsible for the accuracy or completeness of electronic copies of this plan sheet.

STD. PLAN A78A

STATE OF CALIFORNIA
DEPARTMENT OF TRANSPORTATION

THRIE BEAM BARRIER

NO SCALE

ALL DIMENSIONS ARE IN MILLIMETERS UNLESS OTHERWISE SHOWN

A78A

Return to Table of Contents

DIST	COUNTY	ROUTE	KILOMETER POST TOTAL PROJECT	SHEET NO.	TOTAL SHEETS

Contours Metric

Donald E Fogle
REGISTERED CIVIL ENGINEER

July 1, 1997
PLANS APPROVAL DATE

REGISTERED PROFESSIONAL ENGINEER Donald E. Fogle No. C34637 Exp. 9-30-99 CIVIL STATE OF CALIFORNIA

The State of California or its officers or agents shall not be responsible for the accuracy or completeness of electronic copies of this plan sheet.

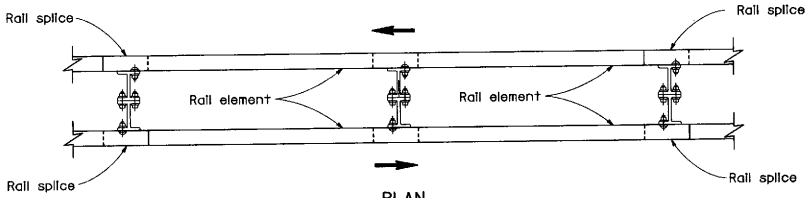

PLAN

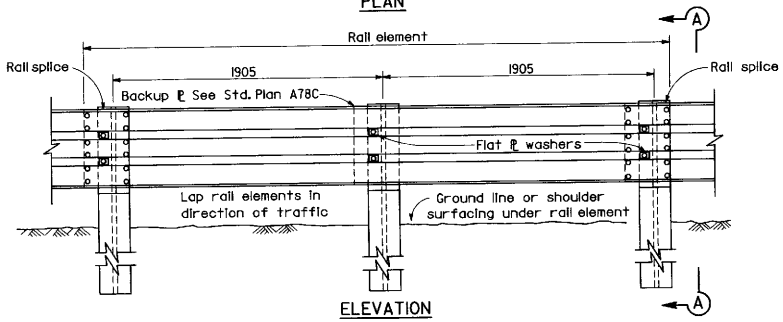

ELEVATION

DOUBLE THRIE BEAM BARRIER

(Steel post and block)
See Note 1

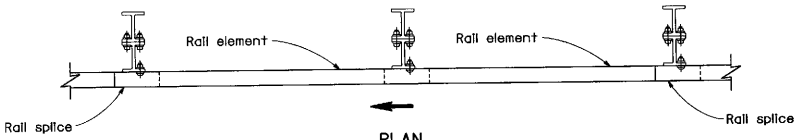

PLAN

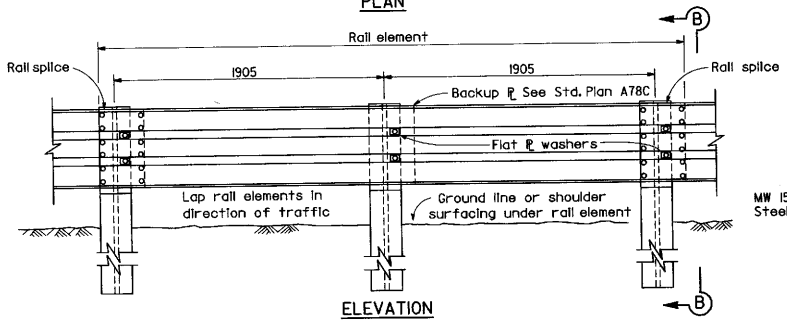

ELEVATION

SINGLE THRIE BEAM BARRIER

(Steel post and block)
See Note 1

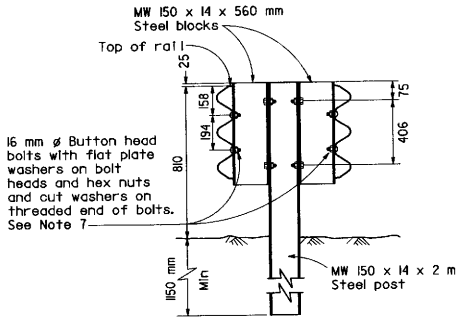

SECTION A-A

Each block attached to post with two 16 mm ø hex head bolts and hex nuts with cut washers.
See Detail A and Note 8

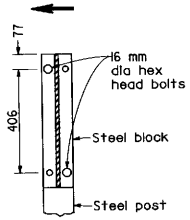

DETAIL A

Steel block attachment to steel post

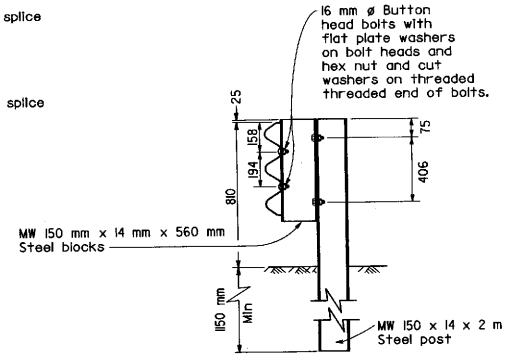

SECTION B-B

Block attached to post with two 16 mm ø hex head bolts and hex nuts with cut washers.
See Detail A and Note 8

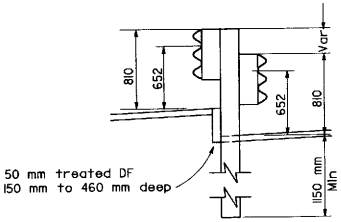

DOUBLE THRIE BEAM BARRIER
SAW TOOTH INSTALLATION

(Steel post and blocks only)
See Note 11

NOTES

1. For details of the cross section of the thrie beam rail element, rail element splicing, and details for wood post and block installations, see Standard Plan A78A.
2. For details of standard hardware, posts and blocks used to construct thrie beam barrier, see Standard Plan A78C.
3. Thrie beam barrier post spacing to be 1905 mm center to center, except as otherwise noted.
4. Top of barrier rail to be 810 mm above ground line or shoulder surfacing under the rail element.
5. For barrier end anchors and barrier connections, see Standard Plans A78E, A78F and A78G.
6. For connection to Concrete Barrier (Type 50), see Standard Plan A78H.
7. Rail mounts to block with 2 bolts on approaching traffic side of block and post web.
8. Block mounts to post with 2 bolts staggered. Lower bolt on approaching traffic side of block and post web.
9. Where standard embedment of barrier post is restricted by underground concrete facilities such as footing of walls, columns, etc., use post footing details on Standard Plan A77F.
10. For details of thrie beam barrier on bridge and thrie beam barrier at fixed object, see Standard Plan A78D.
11. Saw tooth installation to be used where offset roadway grades are encountered and height of rail element for each roadway cannot be obtained as shown in Section A-A.
12. Direction of traffic indicated by →

STATE OF CALIFORNIA
DEPARTMENT OF TRANSPORTATION

THRIE BEAM BARRIER

NO SCALE

ALL DIMENSIONS ARE IN MILLIMETERS UNLESS OTHERWISE SHOWN

A78B

STD. PLAN A78B

Return to Table of Contents

DIST	COUNTY	ROUTE	KILOMETER POST TOTAL PROJECT	SHEET NO.	TOTAL SHEETS

Metric

Donald E Fogle
REGISTERED CIVIL ENGINEER

July 1, 1997
PLANS APPROVAL DATE

Donald E. Fogle
No. C34637
Exp. 9-30-99
CIVIL
REGISTERED PROFESSIONAL ENGINEER
STATE OF CALIFORNIA

The State of California or its officers or agents shall not be responsible for the accuracy or completeness of electronic copies of this plan sheet.

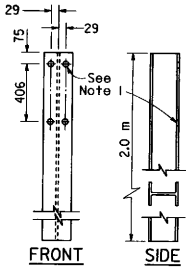

STEEL POST
MW 150 mm x 14 mm or
MW 150 mm x 22 mm

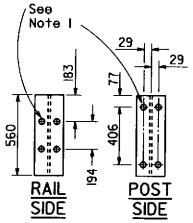

STEEL BLOCK
MW 150 mm x 14 mm

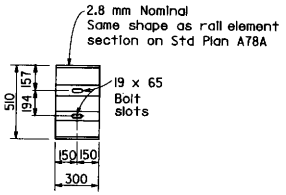

BACK-UP PLATE
See Note 3

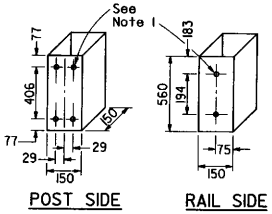

TUBULAR STEEL BLOCK
MW 150 mm x 150 mm x 560 mm (4.8 Thick)
(Use with MW 150 mm x 22 mm)

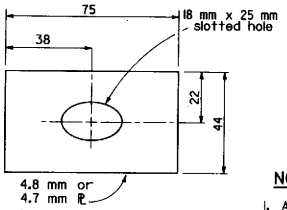

FLAT PLATE WASHER

NOTES

1. All holes in steel post and blocks to be 21 mm ø. Holes in wood and blocks to be 19 mm ø ±2 mm.
2. Contractor may submit alternative post details for Engineer's approval.
3. Back-up plate to be used between barrier rail element and steel block on steel post where there is no rail element splice. See Standard Plan A78B.
4. Terminal sections not to be installed on the trailing end of single thrie beam barrier constructed adjacent to one-way roadways.
5. Dimensions shown for wood post are nominal.
6. Direction of traffic indicated by ⟶

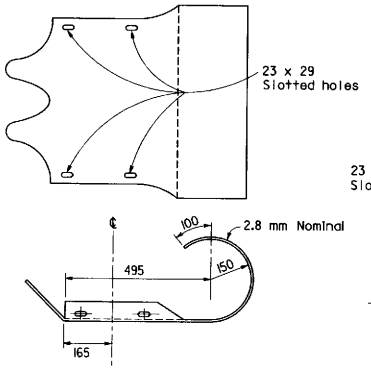

TERMINAL SECTION
See Note 4

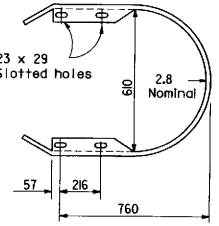

RETURN SECTION

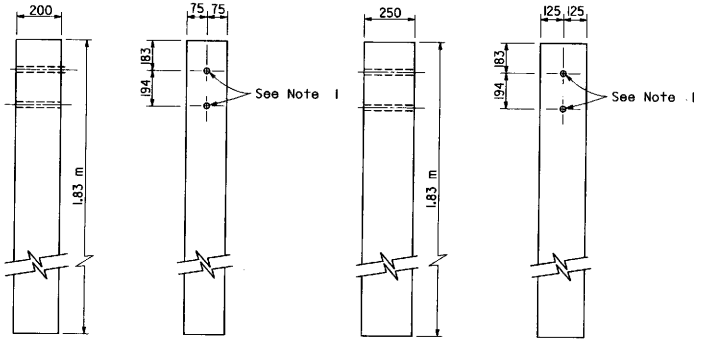

SIDE FRONT
150 mm x 200 mm
DOUGLAS FIR POST

SIDE FRONT
250 mm x 250 mm
DOUGLAS FIR POST

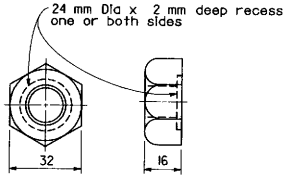

16 mm ø RECESS NUT

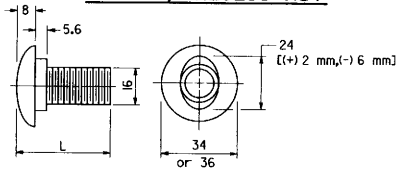

16 mm ø BUTTON HEAD BOLT

L	THREAD LENGTH
35 mm	full thread length
50 mm	45 mm Min thread length
255 mm	100 mm Min thread length
460 mm	100 mm Min thread length

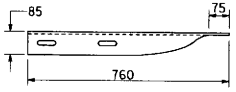

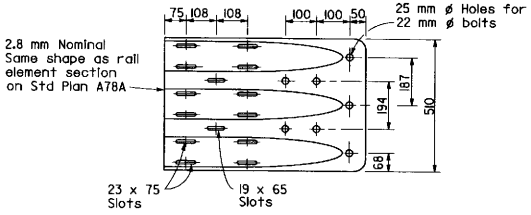

TERMINAL CONNECTOR

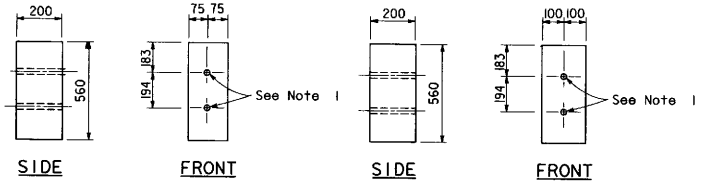

SIDE FRONT
150 mm x 200 mm
DOUGLAS FIR POST

SIDE FRONT
200 mm x 200 mm
DOUGLAS FIR POST

STATE OF CALIFORNIA
DEPARTMENT OF TRANSPORTATION

THRIE BEAM BARRIER STANDARD HARDWARE

NO SCALE

ALL DIMENSIONS ARE IN MILLIMETERS UNLESS OTHERWISE SHOWN

A78C

STD. PLAN A78C

Return to Table of Contents

DIST	COUNTY	ROUTE	KILOMETER POST TOTAL PROJECT	SHEET NO.	TOTAL SHEETS

Donald E Fogle
REGISTERED CIVIL ENGINEER

July 1, 1997
PLANS APPROVAL DATE

REGISTERED PROFESSIONAL ENGINEER Donald E. Fogle No. C34637 Exp. 9-30-99 CIVIL STATE OF CALIFORNIA

The State of California or its officers or agents shall not be responsible for the accuracy or completeness of electronic copies of this plan sheet.

Metric

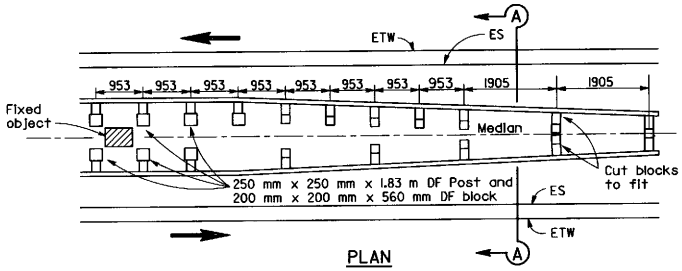

PLAN

THRIE BEAM BARRIER AT FIXED OBJECTS

(Wood post and block shown)
For a series of fixed objects (bridge, columns, overhead sign supports, etc.) additional 250 mm x 250 mm x 1.83 DF posts with 200 mm x 200 mm x 560 DF blocks at 953 mm center to center are to be used between fixed objects.
See Notes 1 and 2.

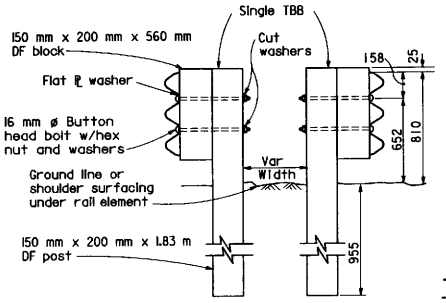

SECTION A-A

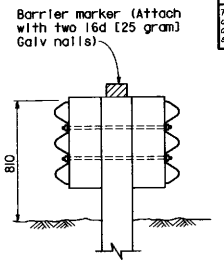

THRIE BEAM BARRIER DELINEATION

See Note 4

NOTES

1. For a typical steel post and steel block thrie beam barrier installation, use MW 150 mm x 22 mm x 2 m steel post with tubular steel blocks in place of the 250 mm x 250 mm 1.83 DF post with 200 mm x 200 mm x 560 mm DF blocks shown at 953 mm center to center spacing.
2. Where a minimum clearance of 900 mm can be obtained between the face of the thrie beam railing and the face of the fixed object, use 150 mm x 200 m x 1.83 m post with 150 mm x 200 mm x 560 mm blocks in place of the 250 mm x 250 mm x 1.83 m post with 200 mm x 200 mm x 560 mm blocks shown and use the typical 1905 mm center to center spacing for all posts.
3. Block mounts to post with 2 bolts staggered. Lower bolt on approaching traffic side of block and post web.
4. Median barrier delineation to be used when required by the special provisions. Spacing of barrier markers to match spacing of raised pavement markers on adjacent median edgeline pavement delineation.
5. Direction of traffic indicated by →

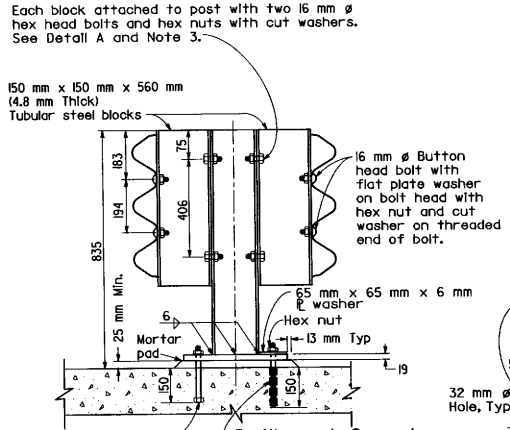

ELEVATION

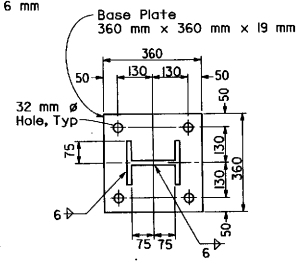

BRIDGE BASE PLATE PLAN

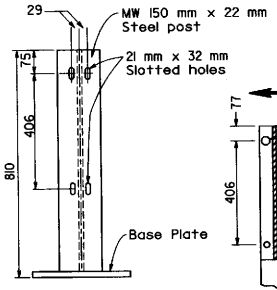

BRIDGE POST DETAILS

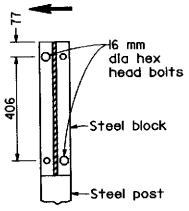

DETAIL A
Steel block attachment to steel post

DOUBLE THRIE BEAM BARRIER ON BRIDGE

STATE OF CALIFORNIA
DEPARTMENT OF TRANSPORTATION

THRIE BEAM BARRIER MISCELLANEOUS DETAILS

NO SCALE

ALL DIMENSIONS ARE IN MILLIMETERS UNLESS OTHERWISE SHOWN

A78D

STD. PLAN A78D

Return to Table of Contents

DIST	COUNTY	ROUTE	KILOMETER POST TOTAL PROJECT	SHEET NO.	TOTAL SHEETS

Caltrans Metric

Donald E Fogle
REGISTERED CIVIL ENGINEER

July 1, 1997
PLANS APPROVAL DATE

REGISTERED PROFESSIONAL ENGINEER Donald E. Fogle No. C34637 Exp. 9-30-99 CIVIL STATE OF CALIFORNIA

The State of California or its officers or agents shall not be responsible for the accuracy or completeness of electronic copies of this plan sheet.

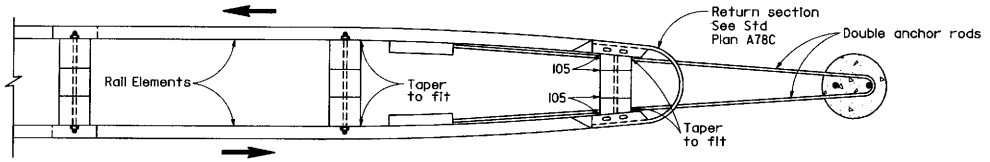

PLAN

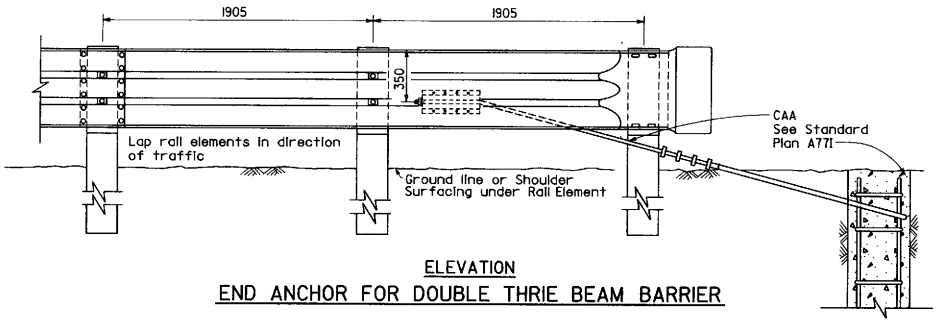

ELEVATION
END ANCHOR FOR DOUBLE THRIE BEAM BARRIER

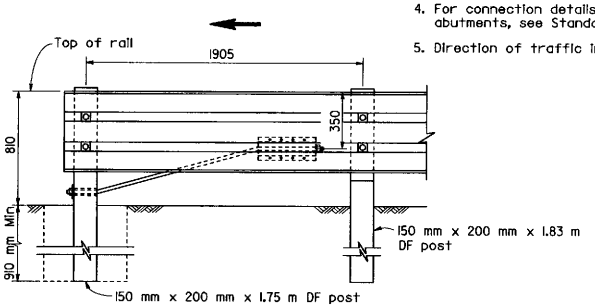

TRAILING END ANCHOR FOR
SINGLE THRIE BEAM BARRIER
(For one-way roadways)
See Note 1

NOTES

1. For anchor details, see Anchor Assembly (Breakaway, Type B) on Standard Plan A77G.
2. For anchor details, see Anchor Assembly (Breakaway, Type M) on Standard Plan A77G.
3. For guard railing approach flares, see Standard Plan A77D.
4. For connection details to bridge, retaining walls and abutments, see Standard Plan A78F and A78G.
5. Direction of traffic indicated by →

CAA = Cable Anchor Assembly

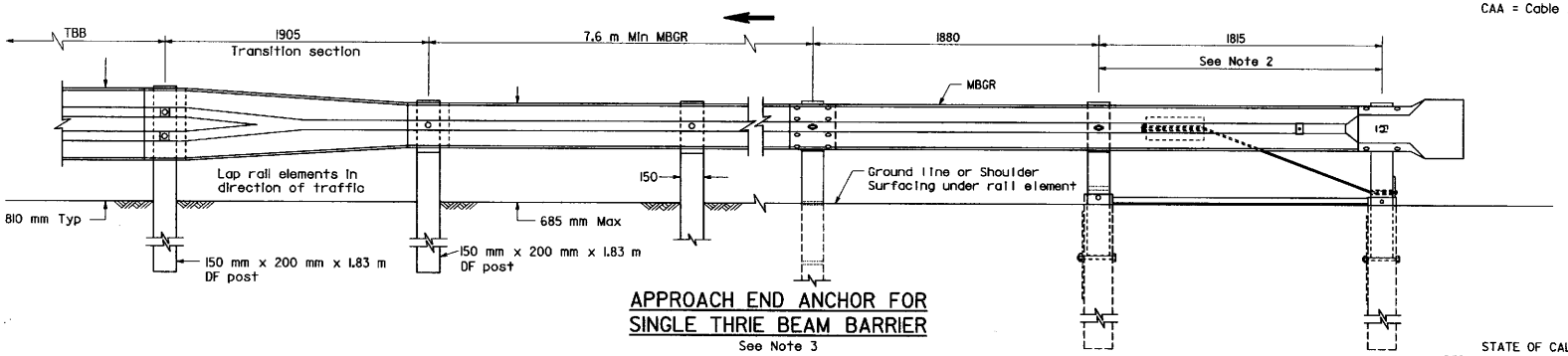

APPROACH END ANCHOR FOR
SINGLE THRIE BEAM BARRIER
See Note 3

STATE OF CALIFORNIA
DEPARTMENT OF TRANSPORTATION

THRIE BEAM BARRIER END ANCHORS

NO SCALE

ALL DIMENSIONS ARE IN
MILLIMETERS UNLESS OTHERWISE SHOWN

A78E

STD. PLAN A78E

Return to Table of Contents

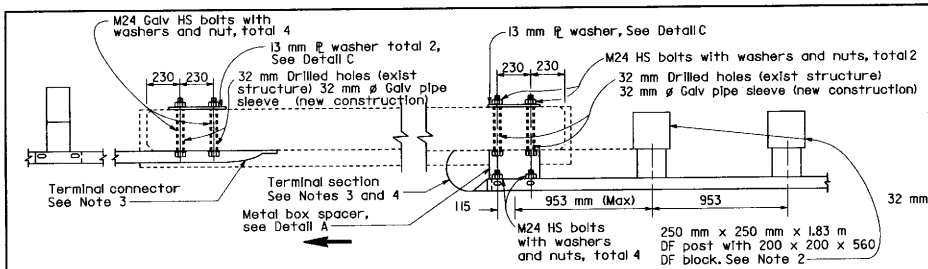

CONNECTION DETAIL 1 — See Note 8 | PLAN | CONNECTION DETAIL 2

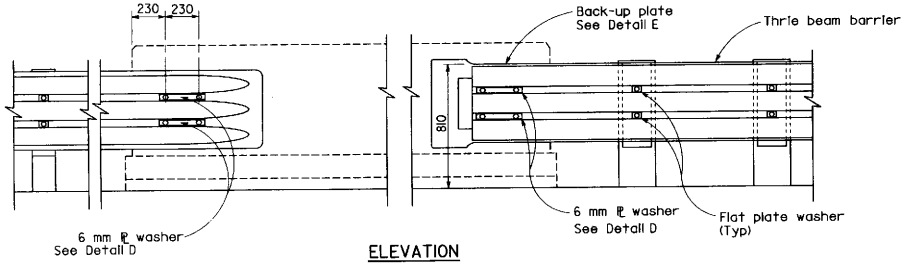

ELEVATION

THRIE BEAM BARRIER CONNECTION TO BRIDGE RAILING WITH VERTICAL FACE

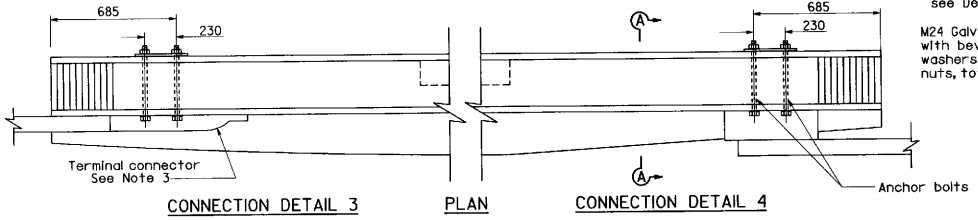

CONNECTION DETAIL 3 — See Note 7 and 8 | PLAN | CONNECTION DETAIL 4

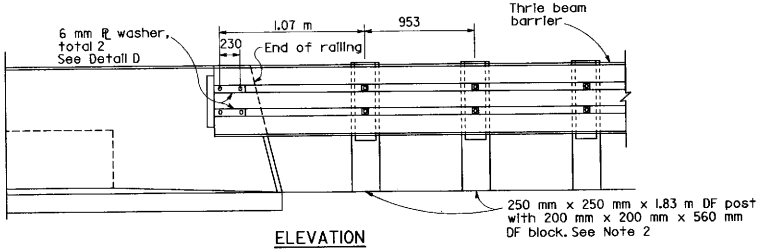

ELEVATION

THRIE BEAM BARRIER CONNECTION TO BRIDGE RAILING WITH SLOPED FACE

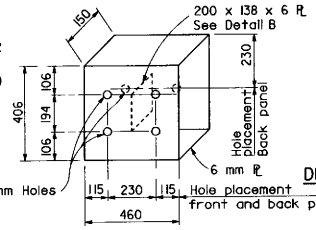

DETAIL A

STRAIGHT METAL BOX SPACER

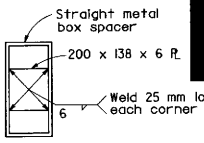

DETAIL B

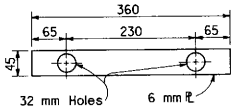

DETAIL D

6 mm PLATE WASHER

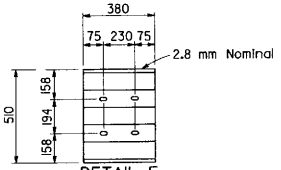

DETAIL E

BACK-UP PLATE

(Same shape as thrie beam rail element. Required when thrie beam rail is attached to bridge railing with metal box spacer and terminal section not used).

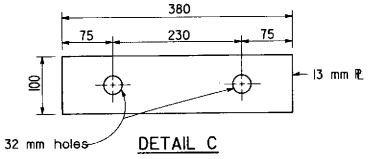

DETAIL C

13 mm PLATE WASHER

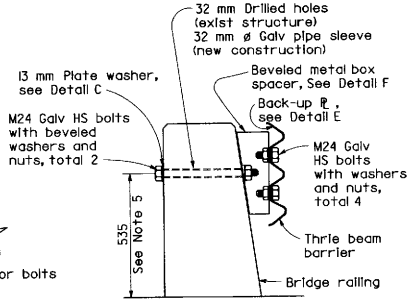

SECTION A-A

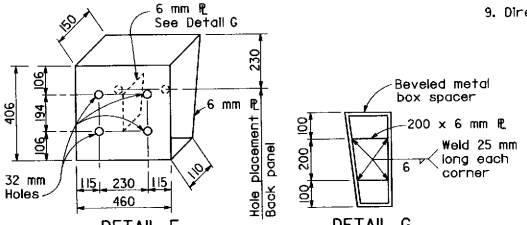

DETAIL F — DETAIL G

BEVELED METAL BOX SPACER

NOTES

1. These connection details apply to concrete bridge railing. For additional connection details see project plans.
2. Where 250 mm x 250 mm DF post and 200 mm x 200 mm DF blocks are shown, MW150 mm x 22 mm steel post and tubular steel 150 mm x 150 mm x 560 mm (4.8 mm thick) blocks may be used where applicable and when specified.
3. Terminal sections and terminal connectors are to be fabricated to fit required spacing as shown.
4. Terminal section not to be installed on trailing end of approach thrie beam barrier constructed adjacent to one-way roadway. when terminal section is required, trim section to fit.
5. This dimension may vary slightly to fit existing bolt holes in existing bridge railing.
6. Connection Details 1 and 3 are to be used on traffic departure end of bridge.
7. Details for Connection Detail 3 similar to Connection Detail 1 except for anchorage bolts offset dimensions from end of bridge railing.
8. Connection Detail 1 and 3, as applicable to the bridge railing involved, shall be used for both the departure and approach end of the bridge where the bridge railing is 9 m or less from opposing traffic. Where Connection Detail 1 or 3 is used on the approach end of the structure, the thrie beam barrier shall be transitioned to the bridge railing as shown in the "Approach Barrier Transition Details" on Standard Plan A78G.
9. Direction of traffic indicated by →

DIST	COUNTY	ROUTE	KILOMETER POST TOTAL PROJECT	SHEET NO.	TOTAL SHEETS

Donald E Fogle
REGISTERED CIVIL ENGINEER

July 1, 1997
PLANS APPROVAL DATE

REGISTERED PROFESSIONAL ENGINEER Donald E. Fogle No. C34637 Exp. 9-30-99 CIVIL STATE OF CALIFORNIA

The State of California or its officers or agents shall not be responsible for the accuracy or completeness of electronic copies of this plan sheet.

Caltrans Metric

STATE OF CALIFORNIA
DEPARTMENT OF TRANSPORTATION

THRIE BEAM BARRIER CONNECTIONS TO BRIDGE RAILING

NO SCALE

ALL DIMENSIONS ARE IN MILLIMETERS UNLESS OTHERWISE SHOWN

A78F

STD. PLAN A78F

Return to Table of Contents

DIST	COUNTY	ROUTE	KILOMETER POST TOTAL PROJECT	SHEET NO.	TOTAL SHEETS

Donald E Fogle
REGISTERED CIVIL ENGINEER
July 1, 1997
PLANS APPROVAL DATE

REGISTERED PROFESSIONAL ENGINEER Donald E. Fogle No. C34637 Exp. 9-30-99 CIVIL STATE OF CALIFORNIA

The State of California or its officers or agents shall not be responsible for the accuracy or completeness of electronic copies of this plan sheet.

Metric

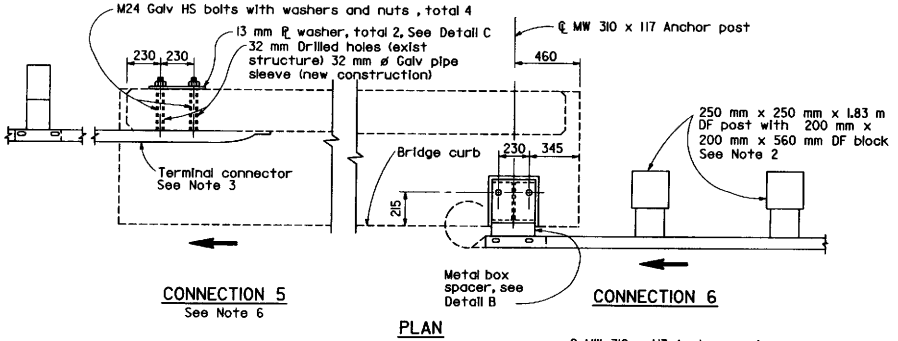

CONNECTION 5
See Note 6

CONNECTION 6

PLAN

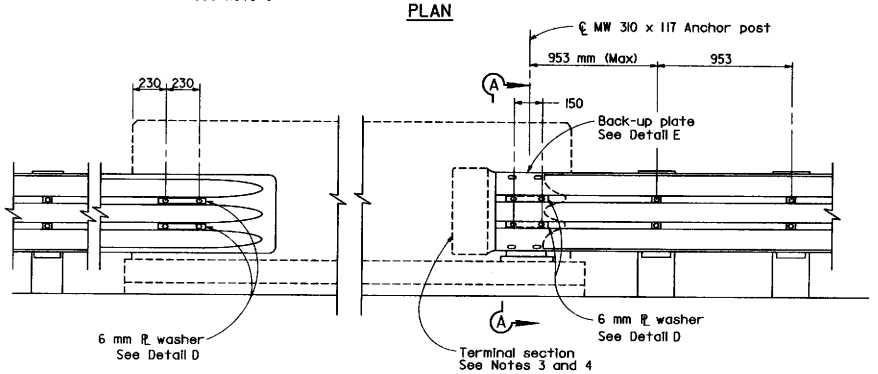

ELEVATION

THRIE BEAM BARRIER CONNECTION TO BRIDGE CURB

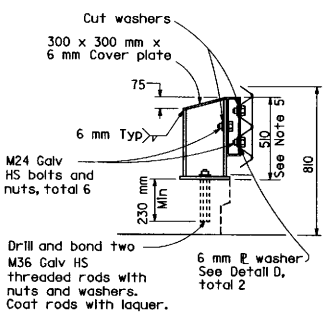

SECTION A-A

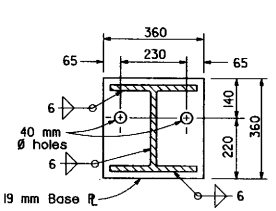

SECTION B-B

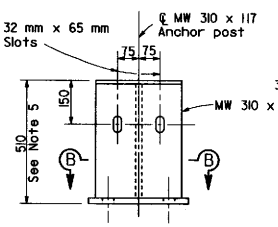

DETAIL A

ANCHOR POST ASSEMBLY

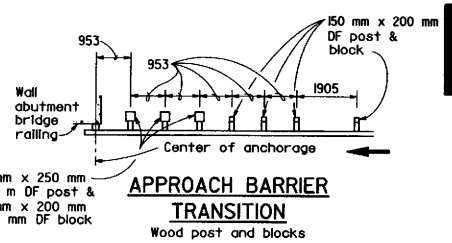

APPROACH BARRIER TRANSITION

Wood post and blocks

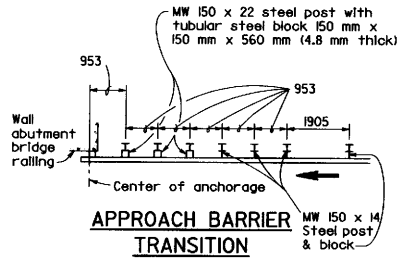

APPROACH BARRIER TRANSITION

Steel post and blocks

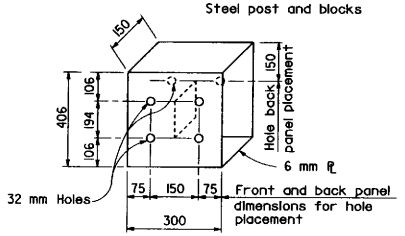

DETAIL B

STRAIGHT METAL BOX SPACER

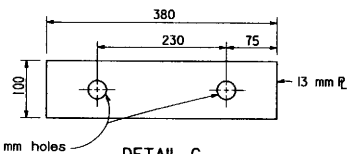

DETAIL C

13 mm PLATE WASHER

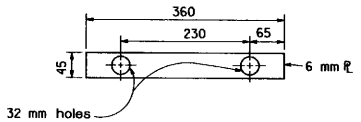

DETAIL D

6 mm PLATE WASHER

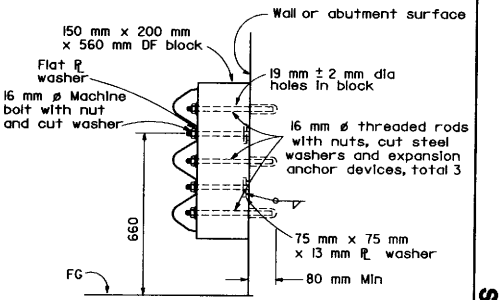

ELEVATION

THRIE BEAM BARRIER ANCHOR TO WALL OR ABUTMENT

(Use this type of anchorage where thrie beam barrier is required across face of wall or abutment.) See Note 7

NOTES

1. These connection details apply to concrete bridge railing, abutments and retaining walls. For additional connection details see project plans.
2. Where 250 mm x 250 mm DF post and 200 mm x 200 mm DF blocks are shown, MW 150 x 22 steel post and tubular steel 150 mm x 150 mm x 560 mm blocks (4.8 mm thick) may be used where applicable and when specified.
3. Terminal sections and terminal connectors are to be fabricated to fit required spacing as shown.
4. Terminal section not to be installed on trailing end of approach thrie beam barrier constructed adjacent to one-way roadways. When terminal section is required, trim section to fit.
5. Dependent dimensions shall be verified in the field before fabricating any end connections to conform with existing pavement elevation conditions. The height of the thrie beam barrier shown is to be maintained.
6. Connection Detail 5 is to be used on traffic departure end of bridges with curbs.
7. Do not attach barrier rail to bridge columns. Use separate post as shown on the detail for thrie beam barrier at fixed object on Standard Plan A78D.
8. Direction of traffic indicated by →

STATE OF CALIFORNIA
DEPARTMENT OF TRANSPORTATION

THRIE BEAM BARRIER CONNECTIONS TO BRIDGE CURBS, RETAINING WALLS AND ABUTMENTS

NO SCALE

ALL DIMENSIONS ARE IN MILLIMETERS UNLESS OTHERWISE SHOWN

A78G

Return to Table of Contents

DIST	COUNTY	ROUTE	KILOMETER POST TOTAL PROJECT	SHEET NO.	TOTAL SHEETS

California Metric

Donald E Fogle
REGISTERED CIVIL ENGINEER

July 1, 1997
PLANS APPROVAL DATE

REGISTERED PROFESSIONAL ENGINEER Donald E. Fogle No. C34637 EXP. 9-30-99 CIVIL STATE OF CALIFORNIA

The State of California or its officers or agents shall not be responsible for the accuracy or completeness of electronic copies of this plan sheet.

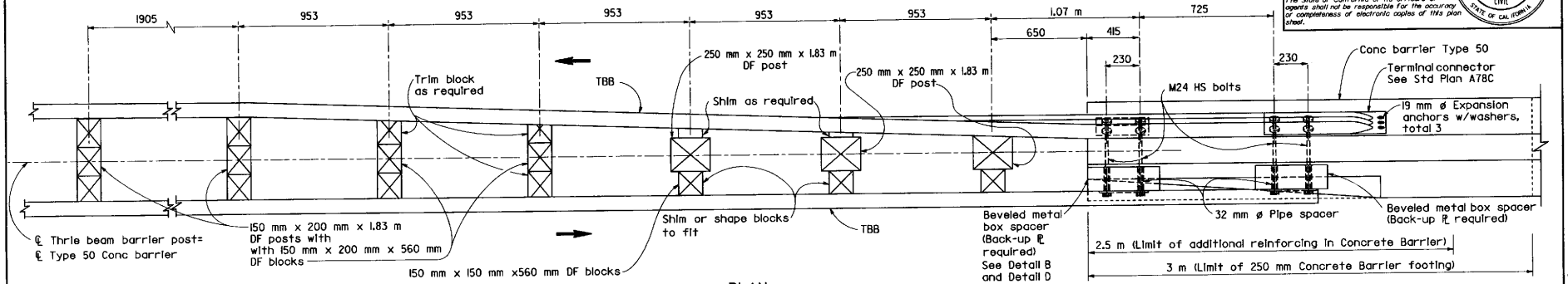

PLAN

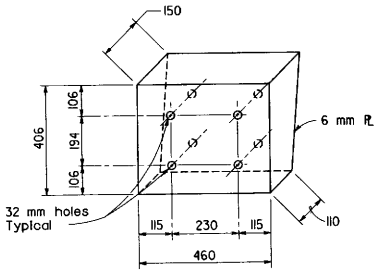

DETAIL B
Beveled metal box spacer
See Note 4

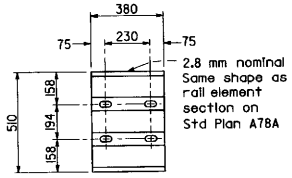

DETAIL D
Back-up P
Use between box spacer and rail element

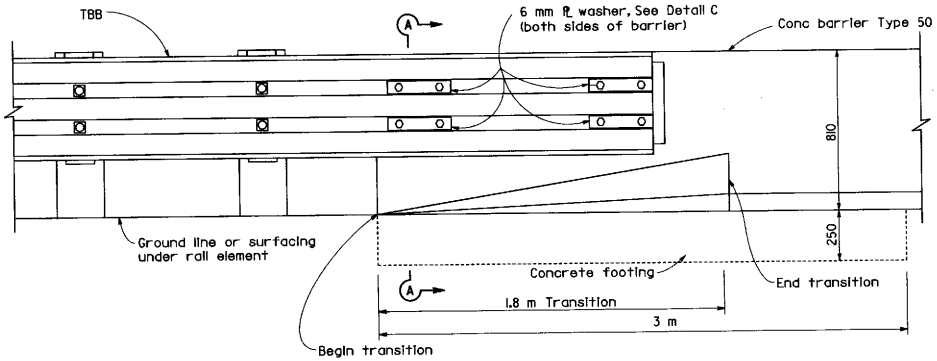

ELEVATION

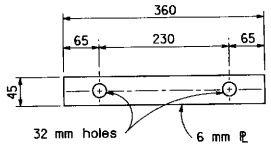

DETAIL C
Plate washer

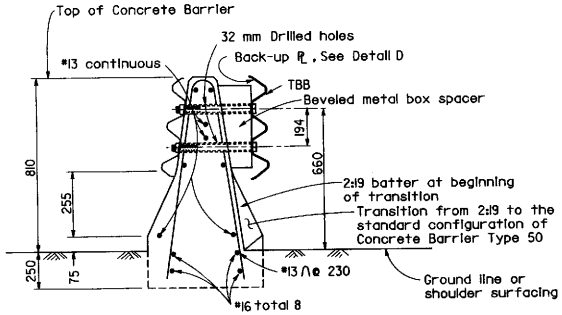

SECTION A-A

NOTES

1. For additional details of Concrete Barrier Type 50, see Standard Plan A75A.
2. The ends of the barrier rail elements are to be fabricated to fit required spacing shown for the connection.
3. For additional thrie beam barrier details, see Standard Plans A78A, A78B, A78C and A78D.
4. Where beveled metal box spacer is installed, place 32 mm ø x 121 mm and 32 mm ø x 100 mm pipe spacers on M24 HS bolts passing through interior of box.
5. Direction of traffic indicated by ➡

STATE OF CALIFORNIA
DEPARTMENT OF TRANSPORTATION

THRIE BEAM BARRIER CONNECTION TO CONCRETE BARRIER TYPE 50

NO SCALE

ALL DIMENSIONS ARE IN MILLIMETERS UNLESS OTHERWISE SHOWN

A78H

STD. PLAN A78H

Return to Table of Contents

DIST	COUNTY	ROUTE	KILOMETER POST TOTAL PROJECT	SHEET NO.	TOTAL SHEETS

Caltrans Metric

Donald E Fogle
REGISTERED CIVIL ENGINEER

July 1, 1997
PLANS APPROVAL DATE

REGISTERED PROFESSIONAL ENGINEER Donald E Fogle No. C34637 Exp. 9-30-99 CIVIL STATE OF CALIFORNIA

The State of California or its officers or agents shall not be responsible for the accuracy or completeness of electronic copies of this plan sheet.

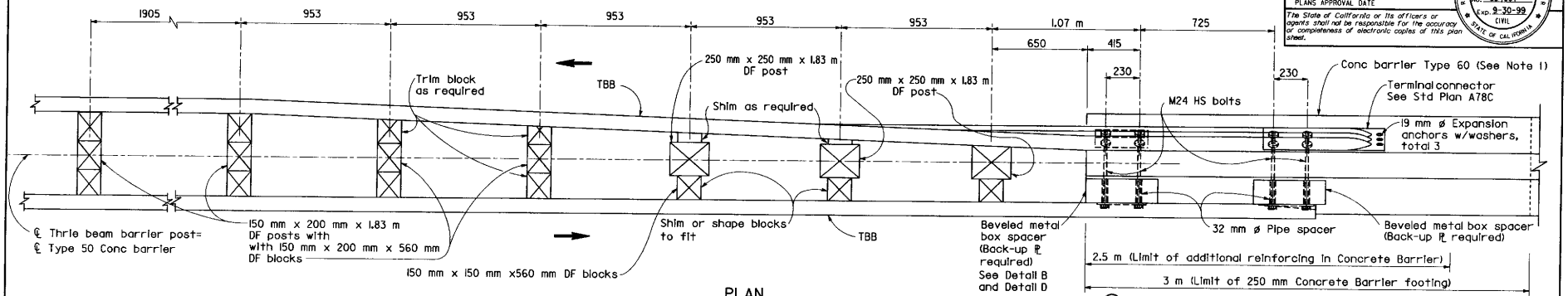

PLAN

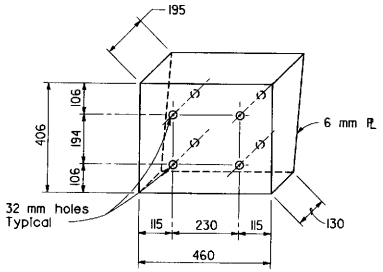

DETAIL B

Beveled metal box spacer
See Note 4

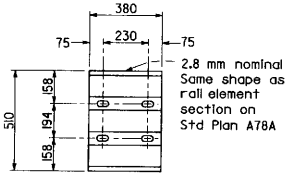

DETAIL D

Back-up P
Use between box spacer and rail element

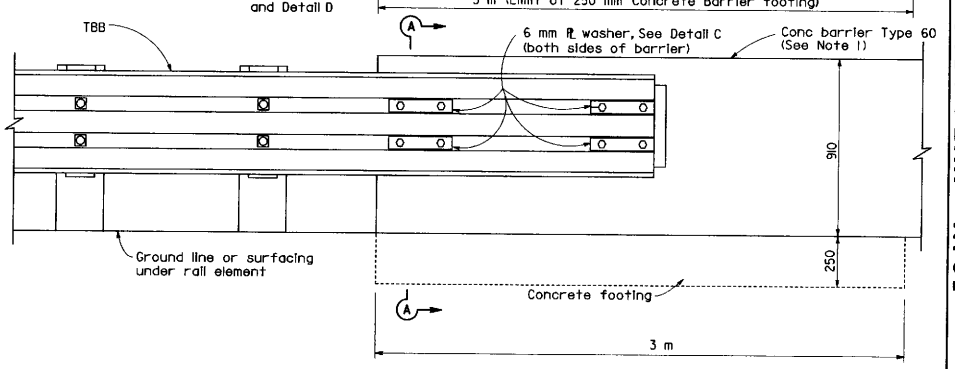

ELEVATION

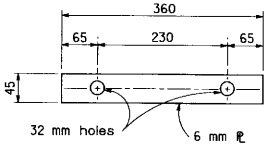

DETAIL C

Plate washer

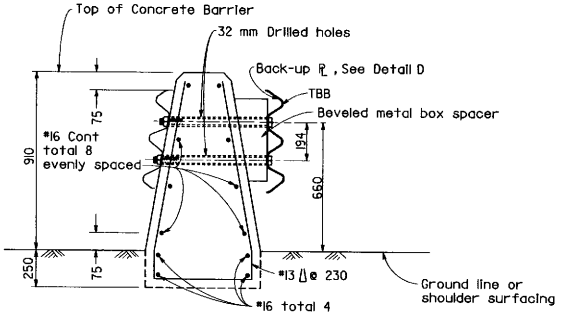

SECTION A-A

NOTES

1. For additional details of Concrete Barrier Type 60, see Standard Plan A76A. Thrie beam barrier connections to Concrete Barrier Type 60S and Type 60G are similar to details shown on this plan.
2. The ends of the barrier rail elements are to be fabricated to fit required spacing shown for the connection.
3. For additional thrie beam barrier details, see Standard Plans A78A, A78B, A78C and A78D.
4. Where beveled metal box spacer is installed, place 32 mm ø x 170 mm amd 32 mm ø x 105 mm pipe spacers on M24 HS bolts passing through interior of box.
5. Direction of traffic indicated by →

STATE OF CALIFORNIA
DEPARTMENT OF TRANSPORTATION

THRIE BEAM BARRIER CONNECTION TO CONCRETE BARRIER TYPE 60

NO SCALE

ALL DIMENSIONS ARE IN MILLIMETERS UNLESS OTHERWISE SHOWN

A78I

STD. PLAN A78I

Return to Table of Contents

DIST	COUNTY	ROUTE	KILOMETER POST TOTAL PROJECT	SHEET NO.	TOTAL SHEETS

Caltrans Metric

Donald E Fogle
REGISTERED CIVIL ENGINEER

July 1, 1997
PLANS APPROVAL DATE

REGISTERED PROFESSIONAL ENGINEER Donald E. Fogle No. C34637 Exp. 9-30-99 CIVIL STATE OF CALIFORNIA

The State of California or its officers or agents shall not be responsible for the accuracy or completeness of electronic copies of this plan sheet.

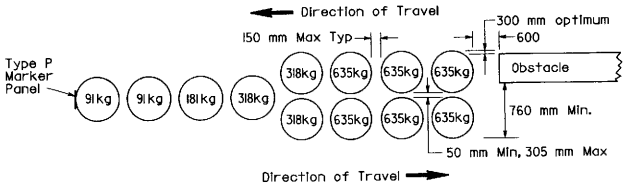

ARRAY 'A'

(APPROACH SPEED 70 km/h OR GREATER)

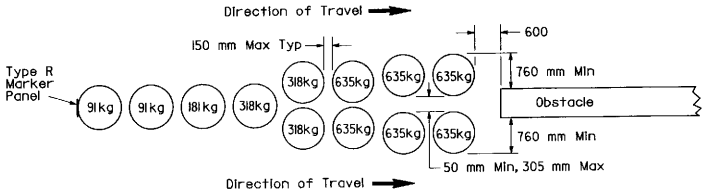

ARRAY 'B'

(APPROACH SPEED 70 km/h OR GREATER)

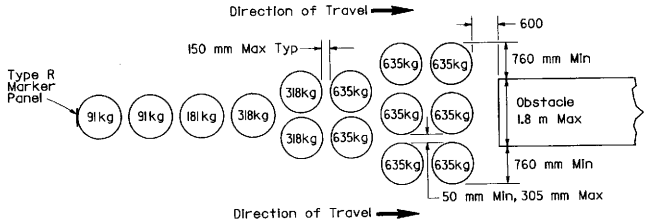

ARRAY 'C'

(APPROACH SPEED 70 km/h OR GREATER)

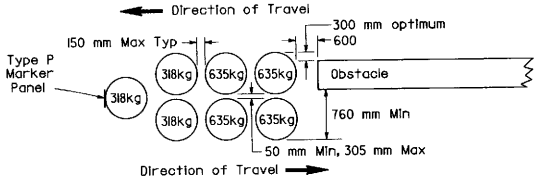

ARRAY 'D'

(APPROACH SPEED 65 km/h OR LESS)

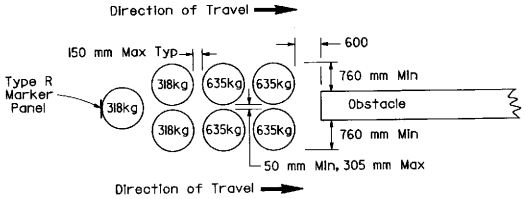

ARRAY 'E'

(APPROACH SPEED 65 km/h OR LESS)

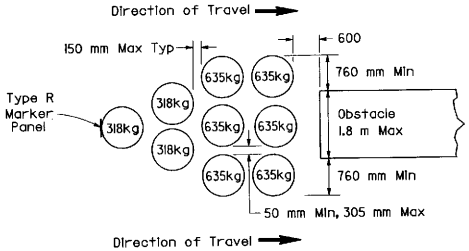

ARRAY 'F'

(APPROACH SPEED 65 km/h OR LESS)

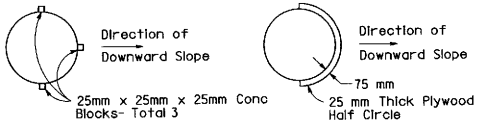

ALTERNATIVE 1 ALTERNATIVE 2

PLAN

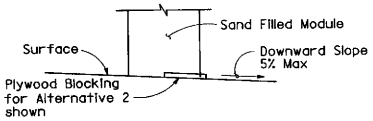

ELEVATION

BRIDGE DECK MODULE BLOCKING DETAILS

(SEE NOTE 8)

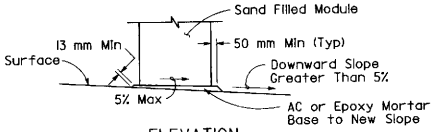

ELEVATION

SLOPED SEAT DETAIL

(SEE NOTE 6)

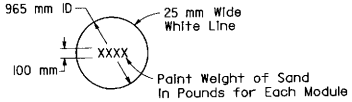

PAINTING DETAIL

(SEE NOTE 7)

NOTES

1. (XXX) indicates module location and weight of sand for each module.
2. All sand weights are nominal.
3. Each module is to contain amount of sand indicated, supported according to the manufacturer's instructions.
4. Arrays 'A', 'B' and 'C' are designed for 105 km/h.
5. Crash cushion array may be angled toward approaching traffic when traffic approaches on one side only (array 'A' and 'D'). Amount of angle not to exceed 10 degrees.
6. Modules shall be placed on asphalt concrete, epoxy mortar or concrete surface. Modules to be placed on surfacing with greater than 5% downward slope shall be seated as shown.
7. Mass of sand and outline of each module shall be painted on the surface at each module location.
8. Module blocking, epoxied to the deck surface, is required for all modules placed on bridge decks. Two acceptable alternatives are shown. Other alternatives recommended by the manufacturer and approved by the Engineer will be accepted.
9. Place the top of the R marker panel 25 mm below the crash cushion lid. Place the type P marker panel so that the bottom of the panel is at the bottom of the module.

STATE OF CALIFORNIA
DEPARTMENT OF TRANSPORTATION

CRASH CUSHION, SAND FILLED

NO SCALE

ALL DIMENSIONS ARE IN MILLIMETERS UNLESS OTHERWISE SHOWN

A81

STD. PLAN A81

Return to Table of Contents

DIST	COUNTY	ROUTE	KILOMETER POST TOTAL PROJECT	SHEET NO.	TOTAL SHEETS

Caltrans Metric

REGISTERED CIVIL ENGINEER

July 1, 1997
PLANS APPROVAL DATE

REGISTERED PROFESSIONAL ENGINEER Kevin M. Herritt No. C36577 Exp. 6-30-00 CIVIL STATE OF CALIFORNIA

The State of California or its officers or agents shall not be responsible for the accuracy or completeness of electronic copies of this plan sheet.

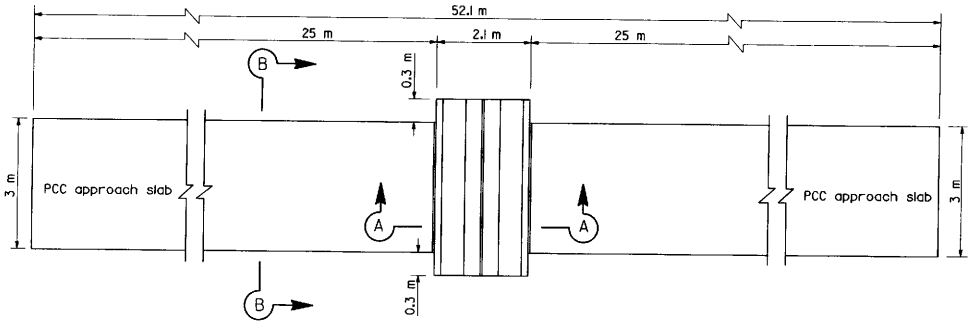

PLAN

PORTABLE SCALE PAD AND APPROACH SLAB

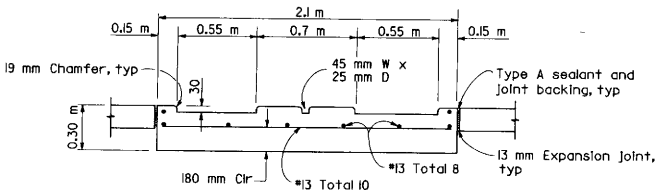

SECTION A-A

PORTABLE SCALE PAD DETAILS

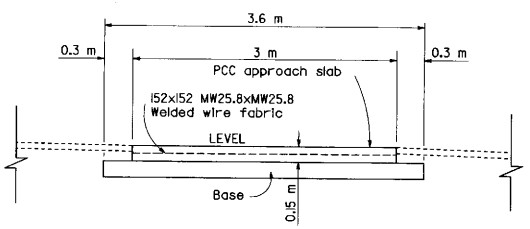

SECTION B-B

APPROACH SLAB DETAILS

See Note 2

NOTES

1. PCC portable scale pad and PCC approach slabs shall be level in all directions.
2. See typical cross section on project plans for limits and thickness of structural section.

STATE OF CALIFORNIA
DEPARTMENT OF TRANSPORTATION

PORTABLE SCALE PAD AND APPROACH SLAB DETAILS

NO SCALE

ALL DIMENSIONS ARE IN MILLIMETERS UNLESS OTHERWISE SHOWN

A83

STD. PLAN A83

Return to Table of Contents

DIST	COUNTY	ROUTE	KILOMETER POST TOTAL PROJECT	SHEET NO.	TOTAL SHEETS

Metric

REGISTERED CIVIL ENGINEER

July 1, 1997
PLANS APPROVAL DATE

Glenn DeCou
No. C34547
Exp. 9-30-99
CIVIL
REGISTERED PROFESSIONAL ENGINEER
STATE OF CALIFORNIA

The State of California or its officers or agents shall not be responsible for the accuracy or completeness of electronic copies of this plan sheet.

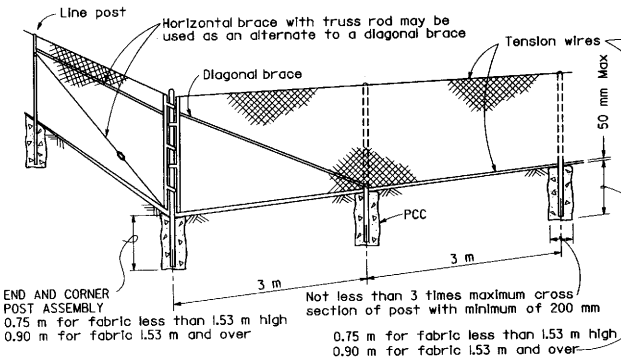

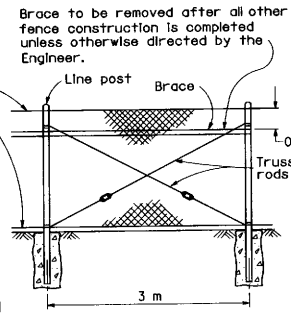

Line posts at 300 m maximum intervals braced and trussed in both directions except that this bracing and trussing may be omitted when the fabric is stretched by the equipment

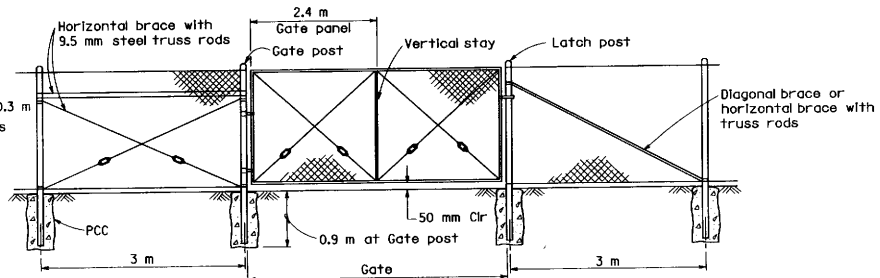

Type CL-1.2=1.22 m fabric
Type CL-1.8=1.83 m fabric

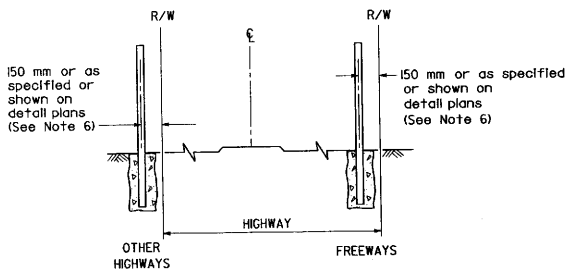

FENCE LOCATION

TYPICAL MEMBER DIMENSIONS (See Notes)

FENCE HEIGHT	LINE POSTS			END, LATCH & CORNER POSTS			BRACES			
	ROUND ID	H	ROLL FORMED	ROUND ID	ROLL FORMED		ROUND ID	H	ROLL FORMED	
1.83 m & less	40	48 x 41	48 x 41	50	89 x 89	51 x 44	32	38 x 33	41 x 32	44 x 32
Over 1.83 m	50	57 x 51	51 x 44	63	89 x 89	63 x 63	32	38 x 33	41 x 32	44 x 32

GATE POST

FENCE HEIGHT	GATE WIDTHS (m)	NOMINAL ID (mm)	MASS PER METER (kg)
1.83 m and Less	Up thru 1.83	65	7.37
	Over 1.83 thru 3.66	100	16.06
	Over 3.66 thru 5.49	125	21.76
	Over 5.49 to 7.32 max	150	28.23
Over 1.83 m	Up thru 1.83	80	11.28
	Over 1.83 thru 3.66	125	21.76
	Over 3.66 thru 5.49	150	28.23
	Over 5.49 to 7.32 max	200	42.49

Above post dimensions and masses are minimums. Larger sizes may be used on approval of the Engineer.

NOTES

1. The above table shows examples of post and brace sections which may comply with the Specifications.
2. Sections shown in the tables must also comply with the strength requirements and other provisions of the Specifications.
3. Other sections which comply with the strength requirements and other provisions of the Specifications may be used on approval of the Engineer.
4. Options exercised shall be uniform on any one project.
5. Dimensions shown are nominal.
6. Offset to be 0.60 m at monument locations, measured at right angles to R/W lines. Taper to achieve offset to be at least 6 m long.

STATE OF CALIFORNIA
DEPARTMENT OF TRANSPORTATION

CHAIN LINK FENCE

NO SCALE

ALL DIMENSIONS ARE IN MILLIMETERS UNLESS OTHERWISE SHOWN

A85

STD. PLAN A85

Return to Table of Contents

DIST	COUNTY	ROUTE	KILOMETER POST TOTAL PROJECT	SHEET NO.	TOTAL SHEETS

Caltrans Metric

REGISTERED CIVIL ENGINEER

July 1, 1997
PLANS APPROVAL DATE

REGISTERED PROFESSIONAL ENGINEER Glenn DeCou No. C34547 Exp. 9-30-99 CIVIL STATE OF CALIFORNIA

The State of California or its officers or agents shall not be responsible for the accuracy or completeness of electronic copies of this plan sheet.

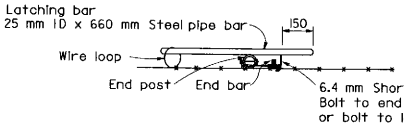

LATCHING DEVICE FOR GATEWAYS

See Note 1

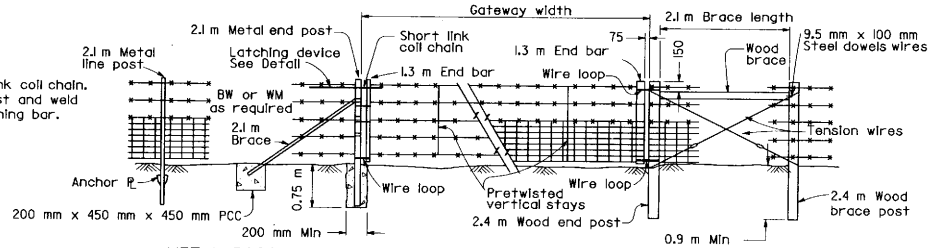

METAL POST INSTALLATION

WOOD POST INSTALLATION

GATEWAY

See Note 3

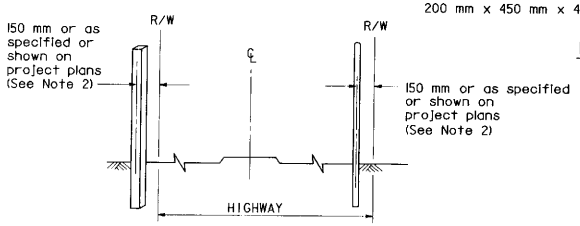

FENCE LOCATION

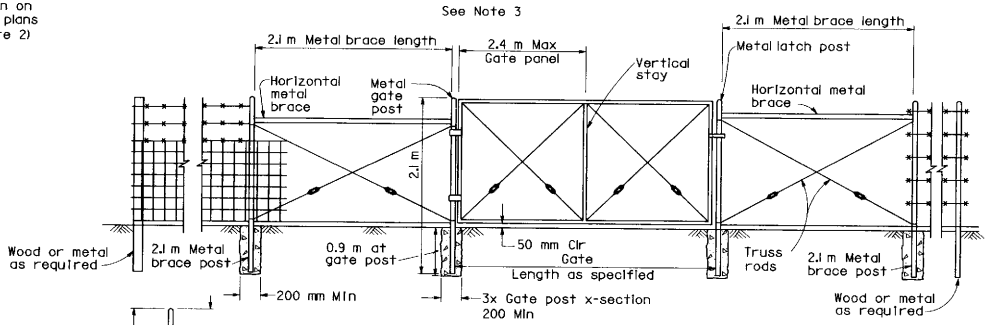

WIRE MESH GATE INSTALLATION FOR EITHER WOOD OR METAL POST FENCES

WIRE MESH GATE POST (See Note 4)		
GATE WIDTHS (m)	NOMINAL ID (mm)	MASS PER METER (kg)
Up thru 1.83	65	7.37
Over 1.83 thru 3.66	90	13.56
Over 3.66 thru 5.49	125	21.76
Over 5.49 to 7.32 max	150	28.23

NOTES

1. Metal end post and end bar shown. Use wood end post and end bar for wood post installation.
2. Offset to be 0.6 m at monument locations, measured at right angles to R/W lines. Taper to achieve offset to be at least 6 m long.
3. Gateway to be used when specified in the special provisions.
4. Post dimensions and masses are minimums. Larger sizes may be used on approval of the Engineer.
5. Line post spacing for wood post equals 3.7 m maximum. Line post spacing for metal post equals 3 m maximum.

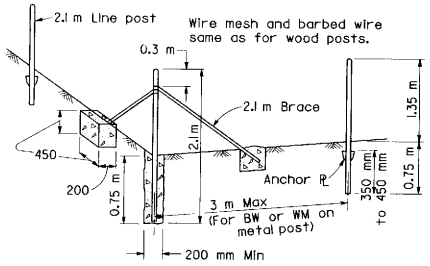

END AND CORNER POST ASSEMBLY

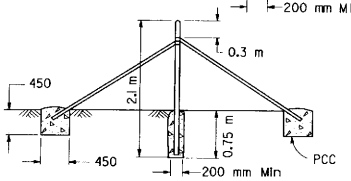

PULL POST ASSEMBLY

At 200 m maximum intervals for WM fence.
At 400 m maximum intervals for BW fence.

METAL POST INSTALLATION

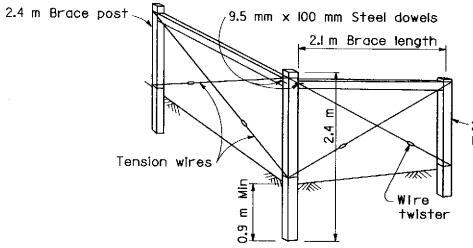

END AND CORNER POST ASSEMBLY

Type BW = 5 lines of barbed wire.
Type WM = Wire mesh and 3 lines of barbed wire.

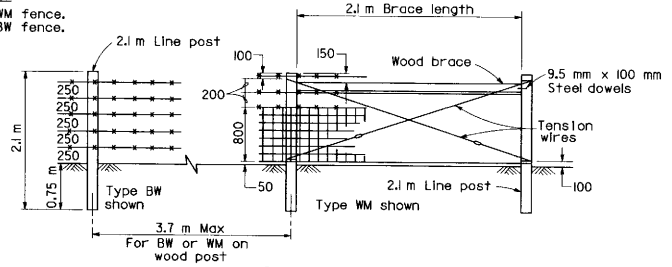

PULL POST ASSEMBLY

At 200 m maximum intervals for WM fence.
At 400 m maximum intervals for BW fence.

WOOD POST INSTALLATION

STATE OF CALIFORNIA
DEPARTMENT OF TRANSPORTATION

BARBED WIRE AND WIRE MESH FENCES

NO SCALE

ALL DIMENSIONS ARE IN MILLIMETERS UNLESS OTHERWISE SHOWN

A86

Return to Table of Contents

DIST	COUNTY	ROUTE	KILOMETER POST TOTAL PROJECT	SHEET NO.	TOTAL SHEETS

REGISTERED CIVIL ENGINEER

July 1, 1997
PLANS APPROVAL DATE

Glenn DeCou
No. C34547
Exp. 9-30-99
CIVIL
STATE OF CALIFORNIA
REGISTERED PROFESSIONAL ENGINEER

The State of California or its officers or agents shall not be responsible for the accuracy or completeness of electronic copies of this plan sheet.

Caltrans Metric

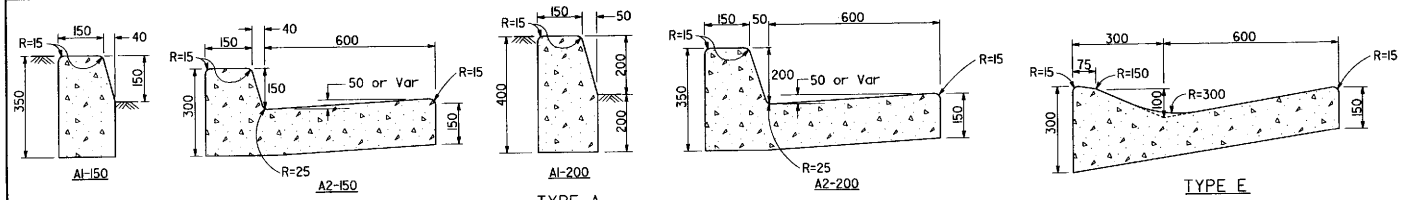

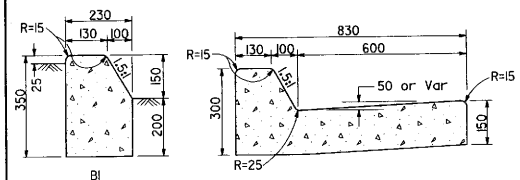

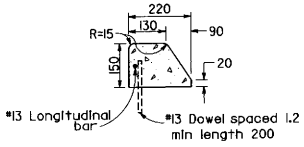

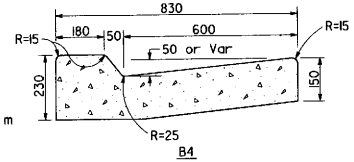

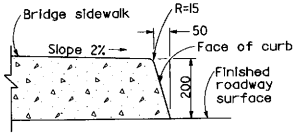

CURB QUANTITIES

TYPE	CUBIC METERS PER METER
A1-150	0.064
A2-150	0.144
A1-200	0.075
A2-200	0.155
B1	0.073
B2	0.152
B3	0.027
B4	0.142
E	0.161

AC DIKE QUANTITIES

TYPE	CUBIC METERS PER METER
A	0.033
B	0.026
C	0.009
D	0.065
E	0.027
F	0.016

AC quantities based on 5% cross slope

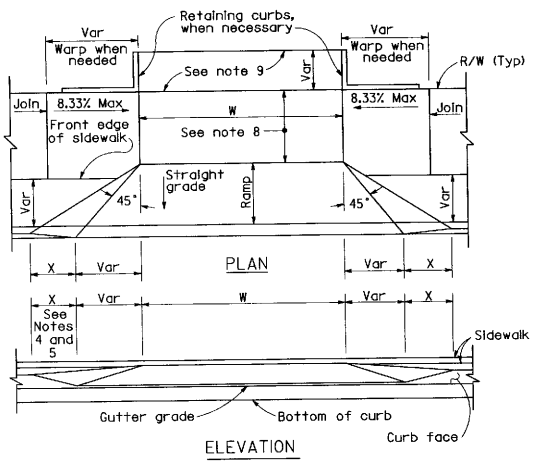

CURBS

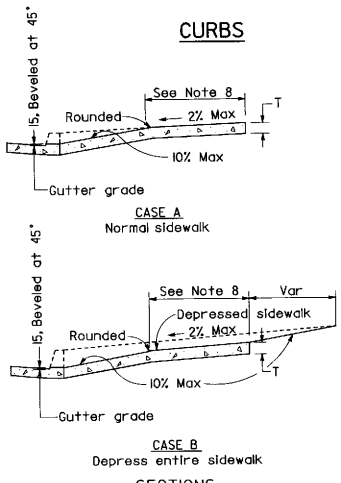

DRIVEWAYS

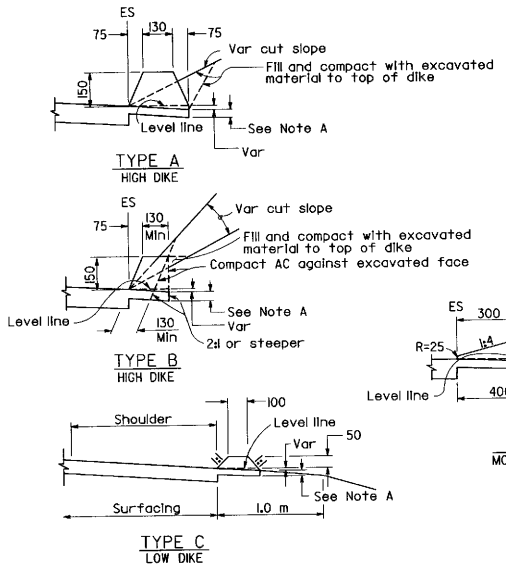

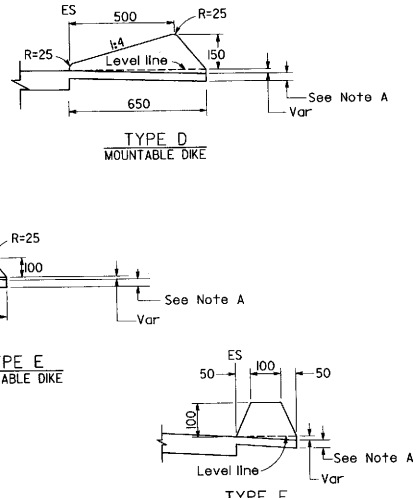

ASPHALT CONCRETE DIKES

NOTE A - Extend top layer of AC placed on the shoulder under dike with no joint at the ES

NOTES

1. Case A normally applies.
2. Use Case B when ramp slopes would exceed 10% in Case A.
3. Use Case B when sidewalk cross slope would exceed 2% in Case A.
4. X=900 mm except for curb heights over 250 mm where 1:4 slopes shall be used on curb slope.
5. X is variable when sidewalk is located where wheelchairs may traverse the surface. Slopes shall be 8.33% maximum.
6. Sidewalk and ramp thickness "T" at driveway shall be 100 mm for residential and 150 mm for commercial.
7. Difference in slope of the driveway ramp and the slope of a line between the gutter and a point on the roadway 1.5 meters feet from gutter line shall not exceed 15%. Reduce driveway ramp slope, not gutter slope, where required.
8. Minimum width of clear passage shall be 1.22 meters. Where right of way restrictions, natural barriers or other existing conditions create an unreasonable hardship, the clear width may be reduced to 915 mm.
9. Retaining curbs and acquisition of construction easement may be necessary for narrow sidewalks or curb heights in excess of 150 mm.

STATE OF CALIFORNIA
DEPARTMENT OF TRANSPORTATION

CURBS, DIKES AND DRIVEWAYS

NO SCALE

ALL DIMENSIONS ARE IN MILLIMETERS UNLESS OTHERWISE SHOWN

A87

STD. PLAN A87

Return to Table of Contents

DIST	COUNTY	ROUTE	KILOMETER POST TOTAL PROJECT	SHEET NO.	TOTAL SHEETS

REGISTERED CIVIL ENGINEER

July 1, 1997
PLANS APPROVAL DATE

The State of California or its officers or agents shall not be responsible for the accuracy or completeness of electronic copies of this plan sheet.

REGISTERED PROFESSIONAL ENGINEER Allen Wrenn No. C14388 Exp. 3-31-01 CIVIL STATE OF CALIFORNIA

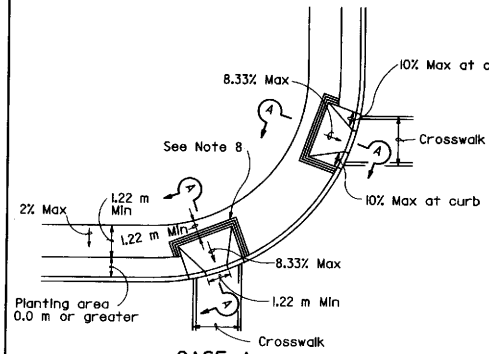

CASE A
See Note 9

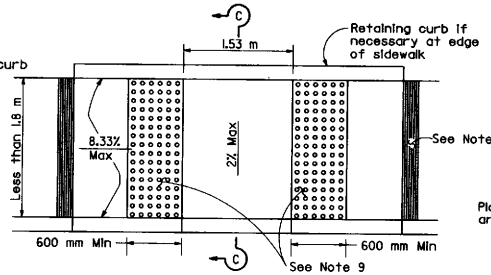

CASE C
Use when sidewalk is less than 1.8 m wide

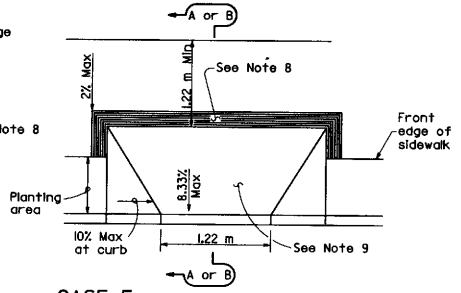

CASE F
See Note 4

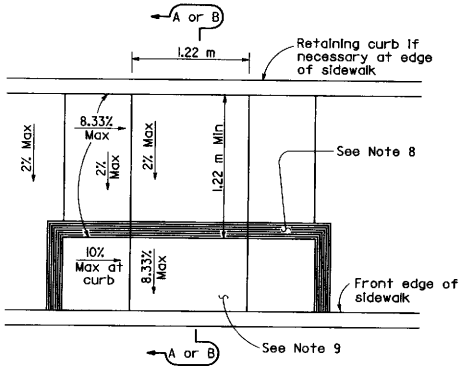

CASE B

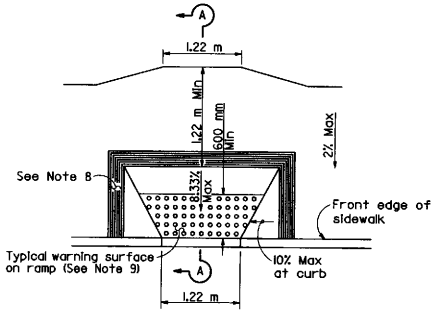

CASE D

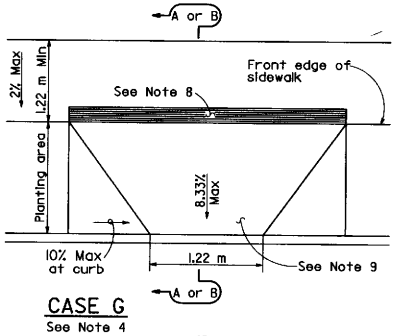

CASE G
See Note 4

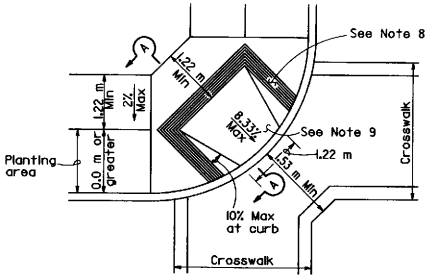

CASE E

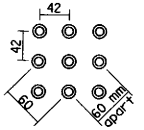

RAISED TRUNCATED DOME PATTERN

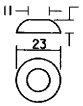

RAISED TRUNCATED DOME

DETECTABLE WARNING SURFACE
See Note 9

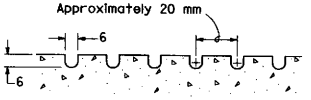

GROOVING DETAIL

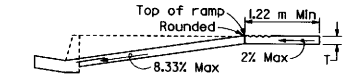

SECTION A-A

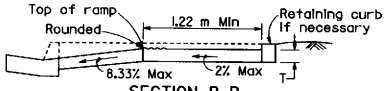

SECTION B-B
Depress entire sidewalk as required

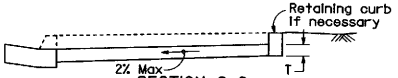

SECTION C-C

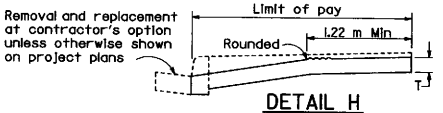

DETAIL H
Existing curb and sidewalk

NOTES

1. If distance from curb to back of sidewalk is too short to accommodate ramp and 1.22 m platform as in Case A, the sidewalk may be depressed longitudinally as in Case B or C or may be widened as in Case D.
2. If sidewalk is less than 1.8 m wide, the full width of the sidewalk shall be depressed as shown in Case C.
3. When ramp is located in center of curb return, crosswalk configuration must be similar to that shown for Case E to accommodate wheelchairs.
4. For Cases F and G, the longitudinal portion of the sidewalk may need to be depressed as shown in Case B.
5. If located on a curve the sides of the ramp need not be parallel, but the minimum width of the ramp shall be 1.22 m.
6. Transitions from ramps to walks, gutters, or streets shall be flush and free of abrupt changes.
7. Sidewalk and ramp thickness, "T", shall be 90 mm minimum.
8. The ramp shall have a 300 mm wide border with 6 mm grooves approximately 20 mm on center. See grooving detail.
9. Curb ramps that have a ramp slope flatter than 6.67% shall have a detectable warning surface that extends the full width of the ramp and 600 mm minimum length, similar to that shown on Case D. Detectable warning surfaces, at the option of the Contractor, shall be constructed by cast-in-place or stamped method, or consist of a prefabricated surface. The prefabricated surface shall conform to the requirements in the special provisions.
10. When detectable warning surface is not required on a curb ramp, the concrete finish of the ramp and its flared sides shall have a transverse broomed surface texture rougher than the surrounding sidewalk.
11. Ramp side slope varies uniformly from a maximum of 10% at curb to conform with longitudinal sidewalk slope adjacent to top of the ramp, except in Case C.
12. Utility pull boxes, manholes, vaults and all other utility facilities within the boundaries of the curb ramp will be relocated or adjusted to grade by the owner prior to, or in conjunction with, curb ramp construction.
13. Maximum slopes of adjoining gutters, the road surface immediately adjacent to the curb ramp and continuous passage to the curb ramp shall not exceed 5 percent within 1.22 m of the top or bottom of the curb ramp.
14. Design details approved by the Division of the State Architect on March 18, 1996.

STATE OF CALIFORNIA
DEPARTMENT OF TRANSPORTATION

CURB RAMP DETAILS

NO SCALE

ALL DIMENSIONS ARE IN MILLIMETERS UNLESS OTHERWISE SHOWN

A88

STD. PLAN A88

Return to Table of Contents

DIST	COUNTY	ROUTE	KILOMETER POST TOTAL PROJECT	SHEET NO.	TOTAL SHEETS

Metric

REGISTERED CIVIL ENGINEER

July 1, 1997
PLANS APPROVAL DATE

Allen Wrenn
No. C14388
Exp. 3-31-01
CIVIL
STATE OF CALIFORNIA
REGISTERED PROFESSIONAL ENGINEER

The State of California or its officers or agents shall not be responsible for the accuracy or completeness of electronic copies of this plan sheet.

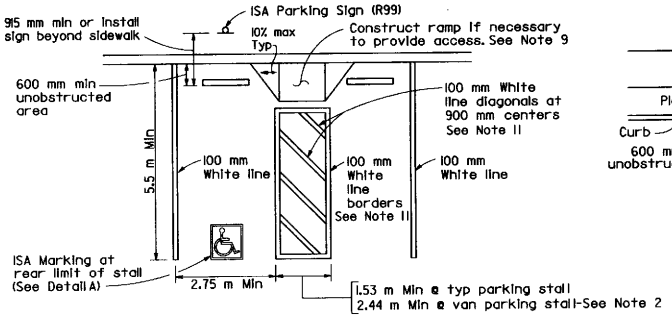

SINGLE PARKING STALL

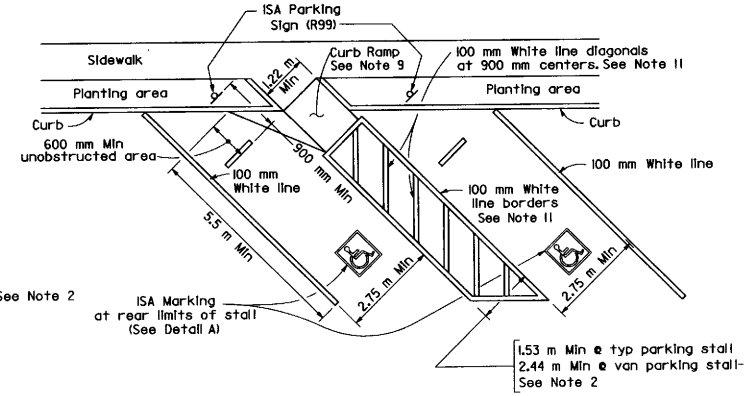

DIAGONAL PARKING STALLS

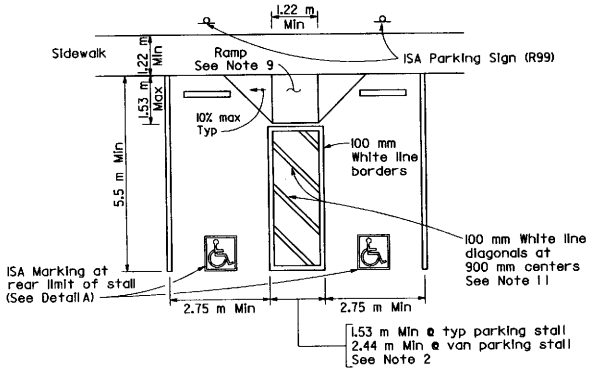

DOUBLE PARKING STALL

TABLE A

Total Number of Parking Spaces or Stalls	Minimum Number of Disabled Accessible Parking Spaces or Stalls
1-25	1
26-50	2
51-75	3
76-100	4
101-150	5
151-200	6
201-300	7
301-400	8
401-500	9
501-1000	2 percent of total
Greater than 1001	20 plus 1 for each 100 or fraction thereof over 1001

OFF-STREET PARKING
(Parking lot or garage)

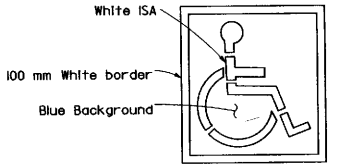

ISA MARKING FOR ACCESSIBLE PARKING SPACE OR STALL
(See Std. Plan A24C)

DETAIL A

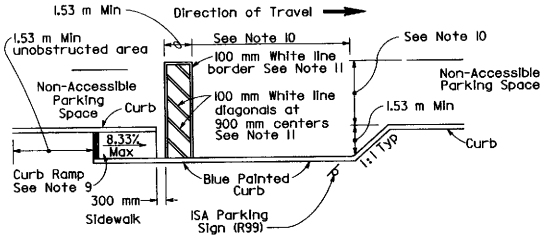

SINGLE PARKING SPACE

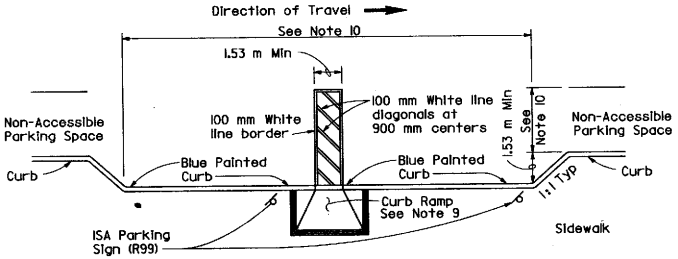

DOUBLE PARKING SPACE

ON-STREET PARKING
(Parallel parking)
See Note 7

ISA = International Symbol of Accessibility

NOTES

1. Accessible parking stalls shall be located as close as possible, and on the shortest accessible route of travel, to the pedestrian entrance or exit of the parking lot or garage.
2. One in every eight accessible off-street parking stalls, but not less than one, shall be served by an accessible aisle of 2.44 m minimum width and shall be signed van accessible. The R99A "Van Accessible" sign shall be mounted below the R99 "ISA Parking" sign.
3. In each parking stall, a curb or bumper shall be provided and located to prevent encroachment of vehicles over the required width of walkways. Parking stalls shall be so located that persons with disabilities are not compelled to wheel or walk behind parked cars other than their own.
4. When less than five parking stalls are provided, one stall with a minimum width of 5.19 m shall be made accessible to persons with disabilities. However, there is no requirement that the stall be reserved exclusively or identified for that purpose.
5. Surface slopes of accessible off-street parking stalls shall be the minimum possible and shall not exceed 2 percent in any direction. Surface slopes of accessible on-street parking stalls shall be the minimum feasible.
6. Table A shall be used to determine the required number of accessible parking stalls in any parking lot or garage.
7. Where new on-street or time limited parking is provided and designated in districts zoned for business use, accessible parking shall be provided in accordance with Table A.
8. Where R99 "ISA Parking" or R99A "Van Accessible" signs are installed on sidewalks or other paths of travel, the bottom of the sign panel shall be a minimum of 2.04 m above the surface of the sidewalk or path. Where R99 or R99A signs are not installed on sidewalks or other paths of travel, the bottom of the sign panel shall be at least 915 mm above the parking area surface.
9. Curb and sidewalk ramps shall conform to the details shown on Standard Plan A88.
10. Accessible on-street parking spaces shall not be smaller in length or width than that specified by the local jurisdiction for other spaces.
11. Blue paint, instead of white may be used for marking accessibility aisles in areas where snow may cause white markings to not be visible.
12. Design details approved by the Division of the State Architect on March 18, 1996.

ISA PARKING SIGN (R99)
Standard 300 mm x 450 mm
See Note 8

VAN ACCESSIBLE SIGN
(R99A) Standard 300 mm x 200 mm
See Notes 2 and 8

STATE OF CALIFORNIA
DEPARTMENT OF TRANSPORTATION

ACCESSIBLE PARKING

NO SCALE

ALL DIMENSIONS ARE IN MILLIMETERS UNLESS OTHERWISE SHOWN

A90

STD. PLAN A90

Return to Table of Contents

DIST.	COUNTY	ROUTE	KILOMETER POST TOTAL PROJECT	SHEET NO.	TOTAL SHEETS

REGISTERED CIVIL ENGINEER

July 1, 1997
PLANS APPROVAL DATE

The State of California or its officers or agents shall not be responsible for the accuracy or completeness of electronic copies of this plan sheet.

REGISTERED PROFESSIONAL ENGINEER
James C. Moese
No. C16576
Exp. 6-30-97
CIVIL
STATE OF CALIFORNIA

Caltrans Metric

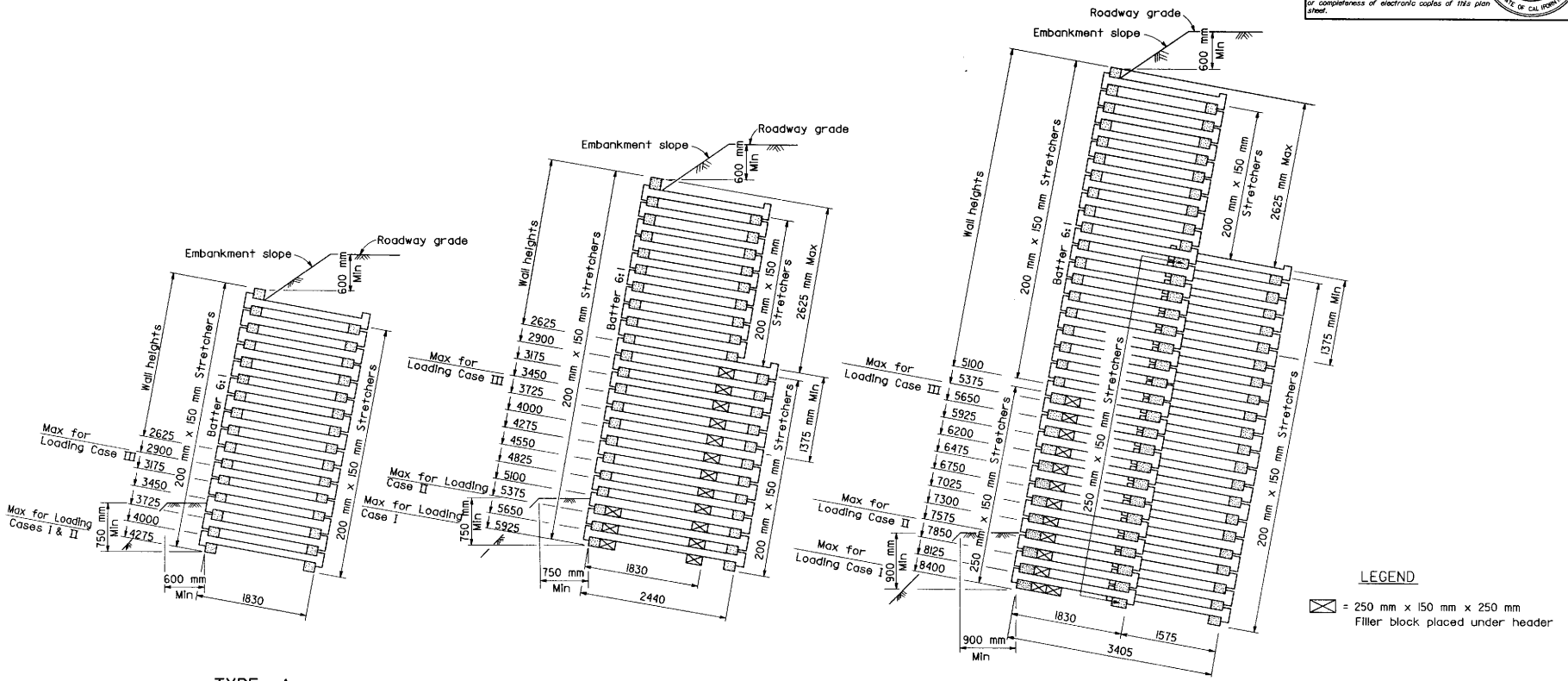

TYPE A

TYPE B

TYPE C

STATE OF CALIFORNIA
DEPARTMENT OF TRANSPORTATION

REINFORCED CONCRETE CRIB WALL BATTERED WALL- TYPES A, B AND C

NO SCALE

ALL DIMENSIONS ARE IN MILLIMETERS UNLESS OTHERWISE SHOWN

C7A

STD. PLAN C7A

Return to Table of Contents

DIST	COUNTY	ROUTE	KILOMETER POST TOTAL PROJECT	SHEET NO.	TOTAL SHEETS

REGISTERED CIVIL ENGINEER

July 1, 1997
PLANS APPROVAL DATE

The State of California or its officers or agents shall not be responsible for the accuracy or completeness of electronic copies of this plan sheet.

REGISTERED PROFESSIONAL ENGINEER James C. Moose No. C16576 Exp. 6-30-97 CIVIL STATE OF CALIFORNIA

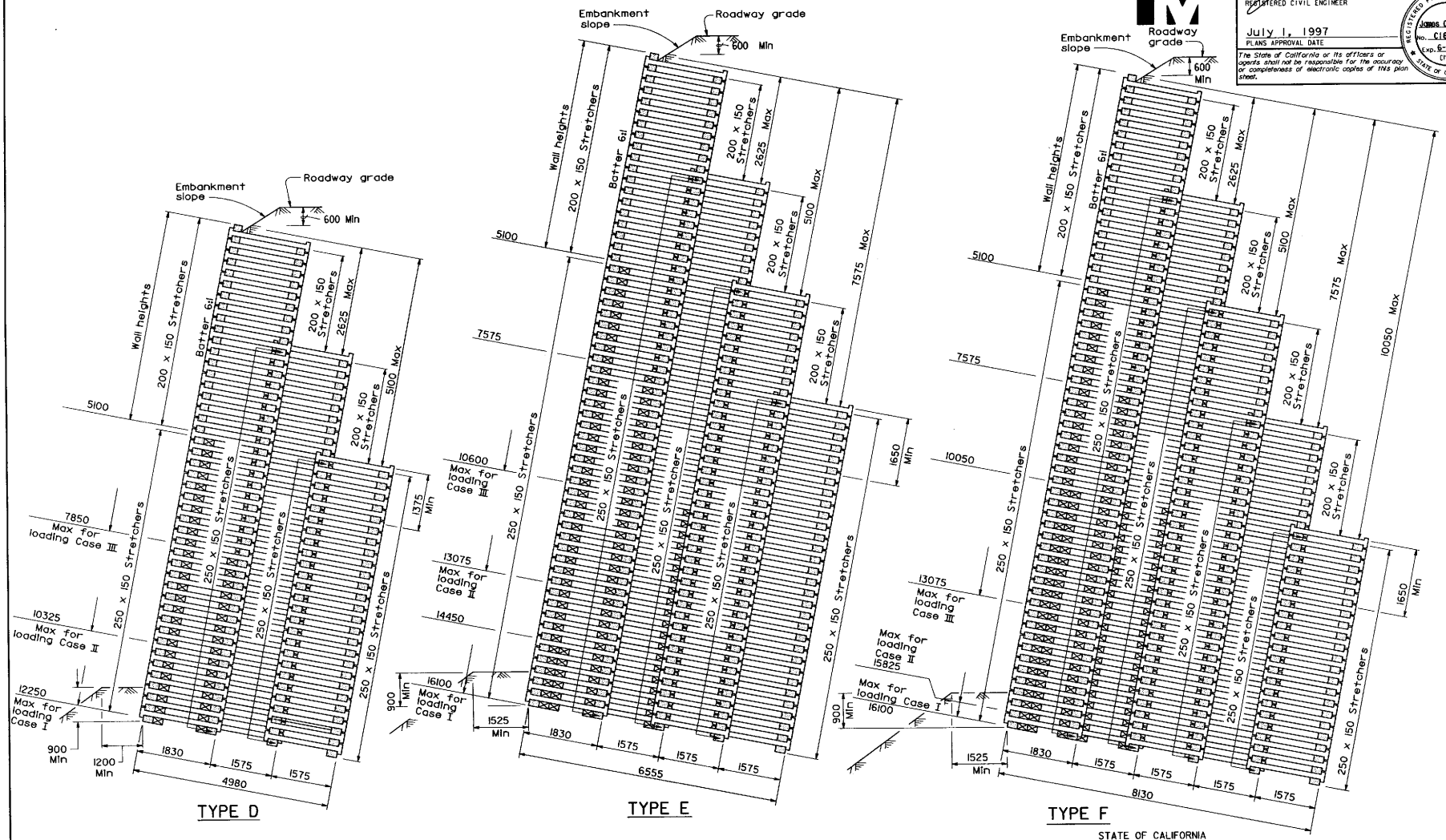

TYPE D

TYPE E

TYPE F

LEGEND

⊠ = 250 x 150 x 250 Filler block placed under header

ALL DIMENSIONS ARE IN MILLIMETERS UNLESS OTHERWISE SHOWN

STATE OF CALIFORNIA
DEPARTMENT OF TRANSPORTATION

REINFORCED CONCRETE CRIB WALL BATTERED WALL-TYPES D, E AND F

NO SCALE

C7B

Return to Table of Contents

DIST	COUNTY	ROUTE	KILOMETER POST TOTAL PROJECT	SHEET NO.	TOTAL SHEETS

Metric

REGISTERED CIVIL ENGINEER

July 1, 1997
PLANS APPROVAL DATE

REGISTERED PROFESSIONAL ENGINEER
James C. Moose
No. C16576
Exp. 6-30-97
CIVIL
STATE OF CALIFORNIA

The State of California or its officers or agents shall not be responsible for the accuracy or completeness of electronic copies of this plan sheet.

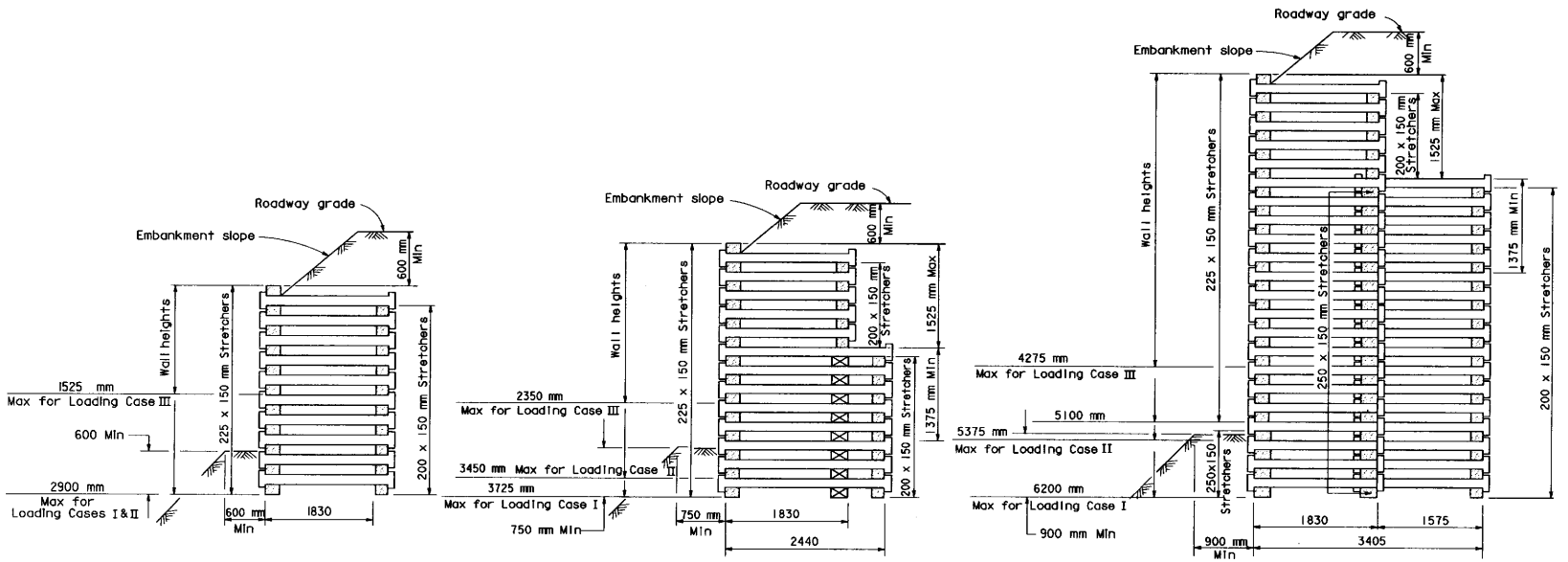

TYPE A

TYPE B

TYPE C

LEGEND

⊠ = 250 x 150 x 250 mm filler block placed under header

STATE OF CALIFORNIA
DEPARTMENT OF TRANSPORTATION

REINFORCED CONCRETE CRIB WALL VERTICAL WALL- TYPES A, B AND C

NO SCALE

ALL DIMENSIONS ARE IN MILLIMETERS UNLESS OTHERWISE SHOWN

C7C

STD. PLAN C7C

Return to Table of Contents

DIST	COUNTY	ROUTE	KILOMETER POST TOTAL PROJECT	SHEET NO.	TOTAL SHEETS

REGISTERED CIVIL ENGINEER

July 1, 1997
PLANS APPROVAL DATE

The State of California or its officers or agents shall not be responsible for the accuracy or completeness of electronic copies of this plan sheet.

REGISTERED PROFESSIONAL ENGINEER
James C. Moses
No. C16576
Exp. 6-30-97
CIVIL
STATE OF CALIFORNIA

Metric

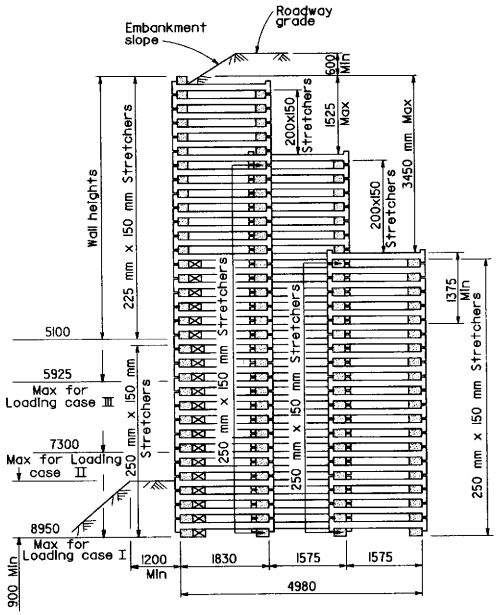

TYPE D

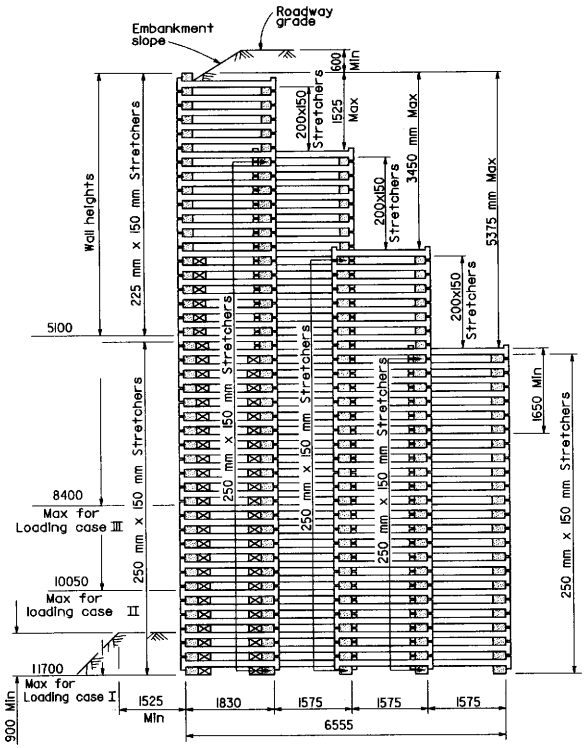

TYPE E

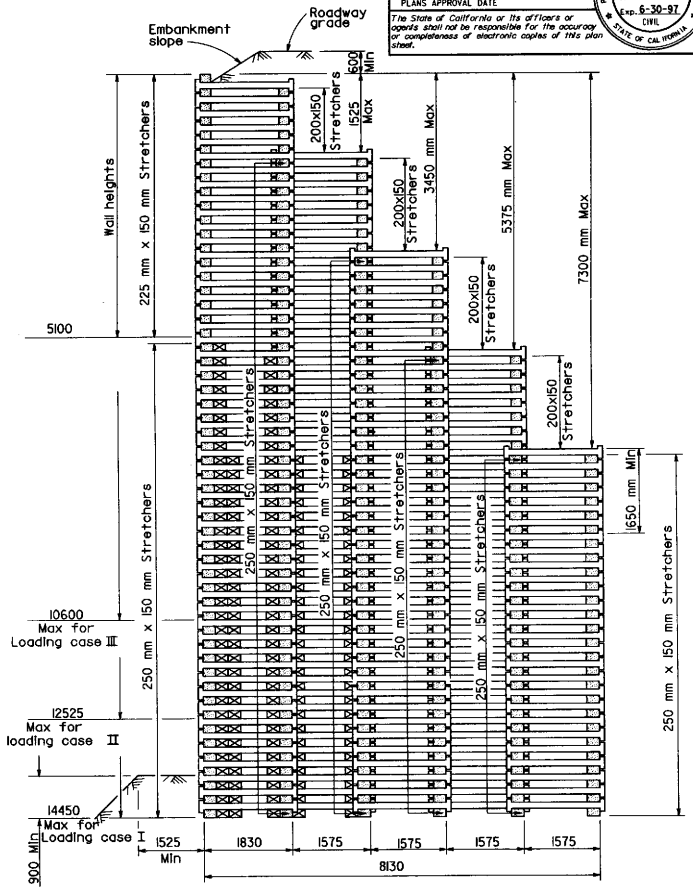

TYPE F

STATE OF CALIFORNIA
DEPARTMENT OF TRANSPORTATION

REINFORCED CONCRETE CRIB WALL VERTICAL WALL-TYPES D, E AND F

NO SCALE

ALL DIMENSIONS ARE IN MILLIMETERS UNLESS OTHERWISE SHOWN

C7D

STD. PLAN C7D

LEGEND

⊠ = 250 mm x 150 mm x 250 mm Filler block placed under header

Return to Table of Contents

DIST	COUNTY	ROUTE	KILOMETER POST TOTAL PROJECT	SHEET NO.	TOTAL SHEETS

REGISTERED CIVIL ENGINEER

July 1, 1997
PLANS APPROVAL DATE

The State of California or its officers or agents shall not be responsible for the accuracy or completeness of electronic copies of this plan sheet.

REGISTERED PROFESSIONAL ENGINEER James C. Moose No. C16576 Exp. 6-30-97 CIVIL STATE OF CALIFORNIA

Caltrans Metric

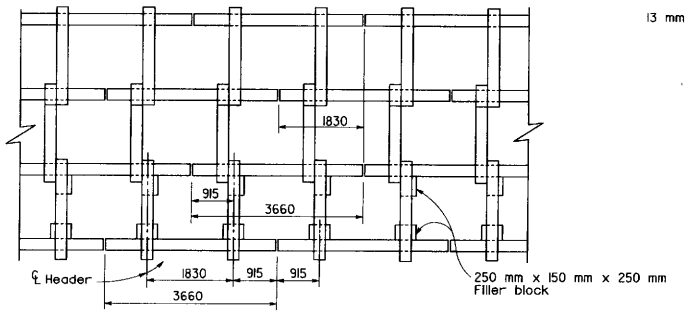

PARTIAL PLAN AT BASE
TYPE "D" SHOWN, OTHERS SIMILAR

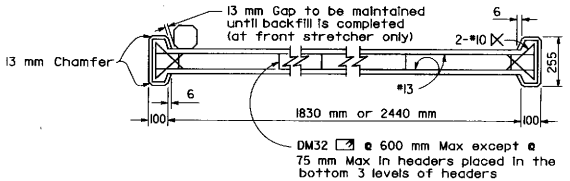

ELEVATION

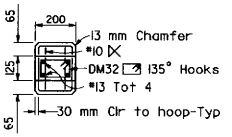

SECTION

HEADER DETAIL

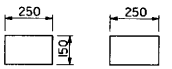

END SIDE

FILLER BLOCK DETAIL

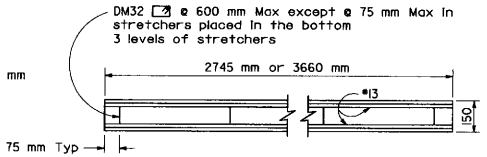

ELEVATION

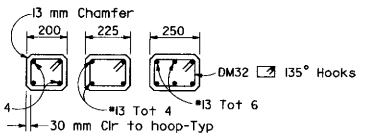

SECTION

STRETCHER DETAIL

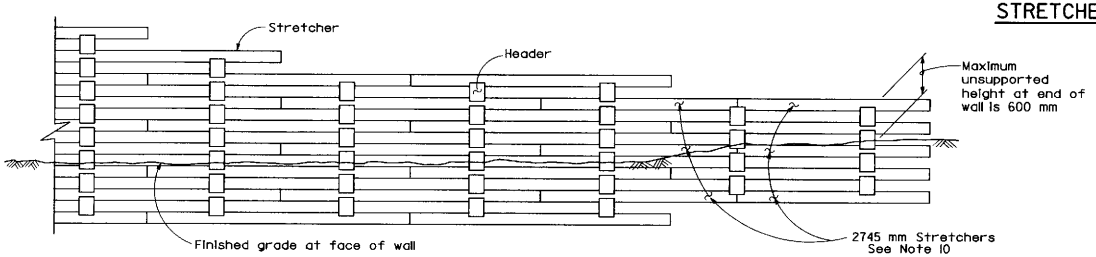

PARTIAL ELEVATION

GENERAL NOTES

1. Reinforced Concrete:
   Concrete - f'c = 25 MPa
   Bar Reinforcement - fy = 420 MPa
   Deformed Wire - fy = 450 MPa
2. Soil Parameters:
   Backfill - ϕ = 34°
   δ = 22.7
   γ = 19 kN/m^3
   Foundation - ϕ = 34°
   Lateral earth pressure determined by Coulomb's theory.
3. Concrete to concrete bearing surfaces shall be finished to a smooth plane. The gap between bearing surfaces shall not exceed 3 millimeters. Where a gap of 1.5 millimeters to 3.0 millimeters exists, a 1.5 millimeters pad of asphalt felt or sheet neoprene shall be placed between the bearing surfaces. For wall Types D, E, and F, a 1.5 millimeters asphalt felt pad or sheet neoprene shall be placed between all concrete bearing surfaces below the 8950 millimeters level.
4. All members may be manufactured to dimensions 4 millimeters greater in thickness and stretchers 13 millimeters less in length.
5. Where an opening is specified in the face of a wall, special length stretchers and additional headers may be required.
6. For non-tangent wall alignment, special length stretchers may be required.
7. For non-tangent wall alignment and at locations where filler blocks are required, special length front face closure members may be required.
8. The thickness of the lowest step for each wall type shall not be less than the dimension shown on these plans.
9. Use of "Front Face Closure Member" shall be required only when specified on project plans or in the Special Provisions.
10. All stretchers are 3660 millimeters except as noted.

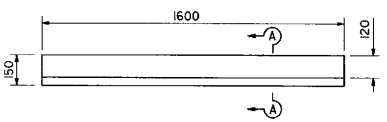

ELEVATION

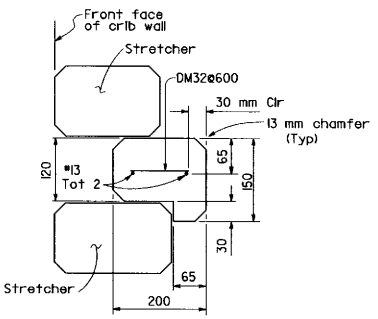

SECTION A-A

FRONT FACE CLOSURE MEMBER

STATE OF CALIFORNIA
DEPARTMENT OF TRANSPORTATION

REINFORCED CONCRETE CRIB WALL TYPES A, B, C, D, E AND F HEADER AND STRETCHER DETAILS

NO SCALE

ALL DIMENSIONS ARE IN MILLIMETERS UNLESS OTHERWISE SHOWN

C7E

STD. PLAN C7E

Return to Table of Contents

DIST	COUNTY	ROUTE	KILOMETER POST TOTAL PROJECT	SHEET NO.	TOTAL SHEETS

REGISTERED CIVIL ENGINEER

July 1, 1997
PLANS APPROVAL DATE

The State of California or its officers or agents shall not be responsible for the accuracy or completeness of electronic copies of this plan sheet.

REGISTERED PROFESSIONAL ENGINEER James C. Moose No. C16576 Exp. 6-30-97 CIVIL STATE OF CALIFORNIA

Caltrans Metric

FOUNDATION PRESSURE-BATTERED WALL

(kPa)

TYPE	LOADING CASE	WALL HEIGHT																											
		425	700	975	1250	1525	1800	2075	2350	2625	2900	3175	3450	3725	4000	4275	4550	4825	5100	5375	5650	5925	6200	6475	6750	7025	7300	7575	7850	8125
A	I	35*	40*	50*	55*	60*	65*	70*	70*	70*	75	90	110	130	150	175														
	II	40*	45*	50*	60*	65*	70*	75*	75*	75*	75*	85	100	120	140	165														
	III	45*	50*	50*	55*	55*	65	80	100	125	155																			
B	I									65*	70	80	90	105	120	130	145	165	180	205	225	250								
	II									65	80	90	105	120	135	155	170	190	215	240										
	III									105	125	150	175																	
C	I											75*	85	95	105	110	120	130	140	155	165	180	195	210	225	245	265	285	305	325
	II											90*	85	100	115	125	135	150	165	180	195	215	230	250	270	295	320	345		
	III											110*	120	140	160	185	205	230	260	290										
D	I																105	115	120	130	140	150	160	170	180	190	200	210	220	235
	II																125*	120*	130	140	155	170	185	200	210	225	240	255	275	290
	III																180*	165*	170	190	210	235	255	280	305	330	355	385	415	
E	I																						140	145	155	165	175	185	195	205
	II																						170*	165*	170	180	195	210	220	235
	III																						250*	235*	220*	240	260	280	300	325
F	I																													180
	II																													200*
	III																													290*

TYPE	LOADING CASE	8400	8675	8950	9225	9500	9775	10050	10325	10600	10875	11150	11425	11700	11975	12250	12525	12800	13075	13350	13625	13900	14175	14450	14725	15000	15275	15550	15825	16100
A	I																													
	II																													
	III																													
B	I																													
	II																													
	III																													
C	I	350																												
	II																													
	III																													
D	I	245	260	270	285	300	315	330	350	365	385	405	425	445	470	490														
	II	310	325	345	365	385	410	430	455																					
	III																													
E	I	215	225	235	250	260	270	280	290	300	315	325	340	350	365	375	390	405	420	440	455	470	490	505	525	545	565	585	610	630
	II	250	270	285	300	315	330	350	365	380	400	420	435	455	475	500	520	540	565											
	III	350	375	400	425	450	480	505	535	565																				
F	I	190	200	210	220	230	240	250	260	270	280	290	305	315	325	335	345	355	365	380	390	400	415	425	440	455	470	480	495	510
	II	210	225	235	250	265	280	290	305	320	340	355	370	390	405	420	435	455	470	490	510	525	545	565	585	610	630	650	675	
	III	280*	290	310	330	350	375	395	420	445	470	495	520	545	575	600	630	660	690											

* Indicates pressure at heel

▌ Heavy vertical line indicates maximum allowable wall height for particular wall type and particular loading case.

DESIGN EXAMPLES

Example No. 1:

Given: Wall height 6100 mm
1:2 cut slope to be retained. Foundation site investigation indicates lateral pressure from material above will be equivalent to design loading case II condition and an allowable soil bearing capacity of 240 kPa.

Select: Battered Type C or Type D wall. Actual H = 6200 mm. Type D vertical wall can be used by increasing the allowable bearing capacity of the original ground.

Example No. 2:

Given: Wall height 2750 mm
Design Loading Case I (600 mm level ground surcharge plus 40 kPa of surcharge) to be retained. Base founded in embankment.

Select: Battered or vertical Type A or Type B wall. Actual H = 2900 mm.

Example No. 3:

Given: Wall height 3050 mm
Design Loading Case III (1:1.5 embankment slope) to be retained. Base in original ground, sloping away from toe of wall at 1:2. Foundation investigation determines the allowable soil bearing capacity is 190 kPa (considering the sloping ground in front of wall).

Select: Battered Type B or Type C wall or Vertical Type C wall. Actual H = 3175 mm

Example No. 4:

Given: Wall height 9150 mm
Design Loading Case II (1:2 embankment slope) to be retained. Base in embankment (1525 mm depth minimum).

Select: Battered Type D, Type E or Type F wall or Vertical Type F wall. Actual H = 9225 mm. For all types the foundation pressure is between 240 and 385 kPa. Embankment material below the wall must be "Structure Backfill" (See Design Example Footnote 1).

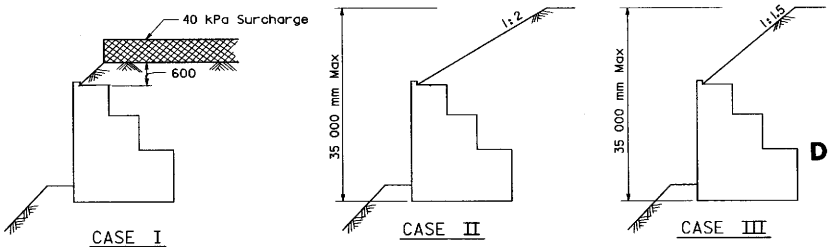

DETAIL OF DESIGN LOADING CASES

DESIGN EXAMPLE FOOTNOTES

1. To constitute a "wall base in embankment" condition, a minimum of 1525 mm of embankment at 95 percent relative compaction is required below the base of the wall. When the foundation pressure is between 240 and 385 kPa, the embankment below the wall shall be constructed with structure backfill material to the limits specified for embankments constructed with relative compaction of 95 percent. The maximum allowable soil bearing capacity is 385 kPa.

2. For walls with "wall base in original ground" condition, the allowable soil bearing capacity, design lateral loads, and slope stability shall be determined by a foundation site investigation and by an analysis. Walls shall not be founded in original ground having an allowable soil bearing capacity of less than 145 kPa.

STATE OF CALIFORNIA
DEPARTMENT OF TRANSPORTATION

DESIGN DATA FOR REINFORCED CONCRETE CRIB WALL FOUNDATION PRESSURE-BATTERED WALL

NO SCALE

ALL DIMENSIONS ARE IN MILLIMETERS UNLESS OTHERWISE SHOWN

C7F

STD. PLAN C7F

Return to Table of Contents

DIST	COUNTY	ROUTE	KILOMETER POST TOTAL PROJECT	SHEET NO.	TOTAL SHEETS

REGISTERED CIVIL ENGINEER

July 1, 1997
PLANS APPROVAL DATE

The State of California or its officers or agents shall not be responsible for the accuracy or completeness of electronic copies of this plan sheet.

REGISTERED PROFESSIONAL ENGINEER James C. Moore No. C16576 Exp. 6-30-97 CIVIL STATE OF CALIFORNIA

Metric

FOUNDATION PRESSURE - VERTICAL WALL

kPa

TYPE	LOADING CASE	WALL HEIGHT 425	700	975	1250	1525	1800	2075	2350	2625	2900	3175	3450	3725	4000	4275	4550	4825	5100	5375	5650	5925	6200	6475	6750	7025	7300	7575	7850	8125
A	I	25 *	30 *	30 *	40	50	65	80	100	120	145 ▌																			
	II	25 *	30 *	35 *	40	50	65	85	105	125	155 ▌																			
	III	30 *	30 *	40	60	80 ▌																								
B	I						55	70	85	100	120	135	155	175 ▌																
	II						60 *	70	90	105	125	150	170 ▌																	
	III						105 *	100	130 ▌																					
C	I									80	95	105	115	130	145	160	175	195	210	230	250	275	300 ▌							
	II									85 *	95	110	125	140	160	180	200	225	250	275 ▌										
	III									140 *	130	150	180	205	235	270 ▌														
D	I															130	145	155	170	180	195	205	220	235	250	270	285	305	320	340
	II															135	155	175	190	210	225	245	265	290	310	335	360	385 ▌		
	III															190 *	210	240	270	295	325	360 ▌								
E	I																			150	165	175	190	200	215	230	240	255	270	280
	II																			165	180	190	210	230	250	270	290	305	325	345
	III																			275 *	280 *	265	290	320	350	380	410	440	470	505
F	I																											225	235	250
	II																											255	270	290
	III																											350	375	405

TYPE	LOADING CASE	8400	8675	8950	9225	9500	9775	10050	10325	10600	10875	11150	11425	11700	11975	12250	12525	12800	13075	13350	13625	13900	14175	14450
A	I																							
	II																							
	III																							
B	I																							
	II																							
	III																							
C	I																							
	II																							
	III																							
D	I	360	385	405 ▌																				
	II																							
	III																							
E	I	295	310	325	340	360	375	395	410	430	450	470	490	510 ▌										
	II	370	390	415	435	460	485	515 ▌																
	III	540 ▌																						
F	I	260	275	290	300	315	330	340	355	370	385	400	415	430	450	465	480	500	520	535	555	575	595	615 ▌
	II	310	330	350	370	385	405	425	450	470	490	515	540	565	590	615	640 ▌							
	III	430	460	490	520	555	585	620	655	690 ▌														

*Indicates pressure at heel

▌ Heavy vertical line indicates maximum allowable wall height for particular wall type and particular loading case.

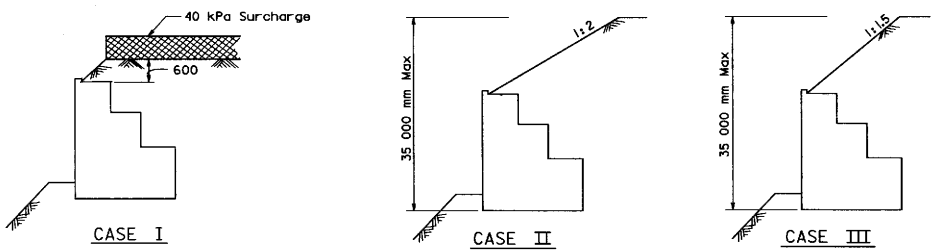

DETAIL OF DESIGN LOADING CASES

STATE OF CALIFORNIA
DEPARTMENT OF TRANSPORTATION

REINFORCED CONCRETE CRIB WALL FOUNDATION PRESSURE-VERTICAL WALL

NO SCALE

ALL DIMENSIONS ARE IN MILLIMETERS UNLESS OTHERWISE SHOWN

C7G

STD. PLAN C7G

Return to Table of Contents

DIST	COUNTY	ROUTE	KILOMETER POST TOTAL PROJECT	SHEET NO.	TOTAL SHEETS

REGISTERED CIVIL ENGINEER

July 1, 1997
PLANS APPROVAL DATE

REGISTERED PROFESSIONAL ENGINEER James C. Moese No. C16576 Exp. 6-30-97 CIVIL STATE OF CALIFORNIA

The State of California or its officers or agents shall not be responsible for the accuracy or completeness of electronic copies of this plan sheet.

Caltrans Metric

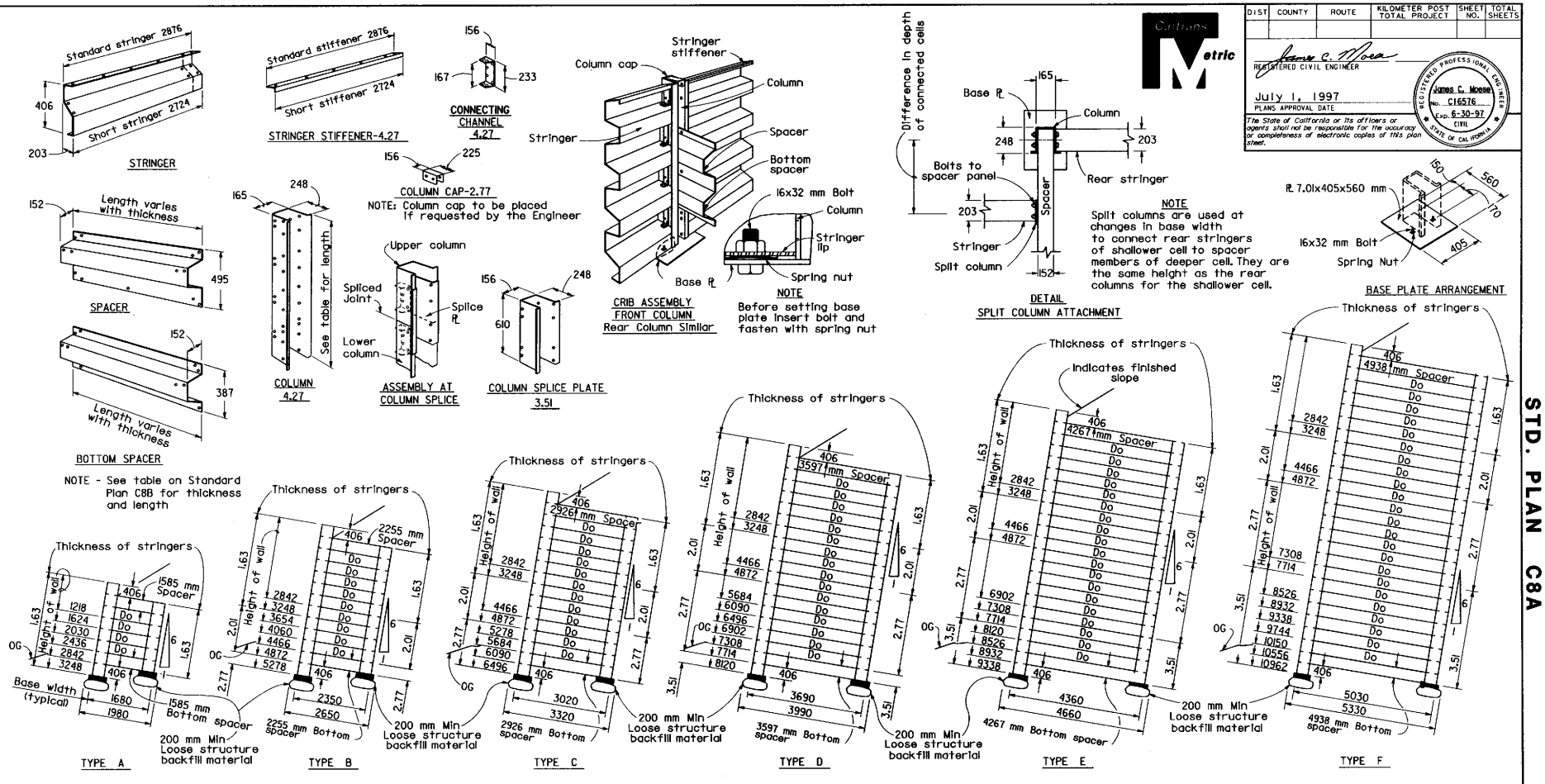

EMBEDMENT DATA		
Wall Type	X	Y
A	600	750
B	750	750
C	900	900
D	1050	900
E	1250	900
F	1400	900

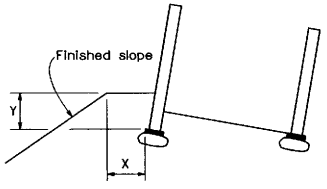

EMBEDMENT DETAIL

WALL TYPE	h	L
A	76	2022
B	35	2683
C	148	3348
D	259	4015
E	371	4682
F	476	5398

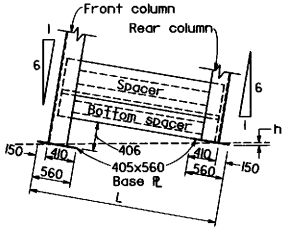

DETAIL - BASE PLATE PLACEMENT

NOTE

Distance h for type A wall is a minus quantity---that is, front column base is lower than rear column base.

All bolts to be 16 millimeters with a minimum length of 32 millimeters

Thickness given in millimeters.

GENERAL NOTES

Design type to be shown on all crib wall layouts.

For design data see Standard Plans C8B and C8C.

LEGEND

Do = Ditto

STATE OF CALIFORNIA
DEPARTMENT OF TRANSPORTATION

STEEL CRIB WALL CONSTRUCTION DETAILS

NO SCALE

ALL DIMENSIONS ARE IN MILLIMETERS UNLESS OTHERWISE SHOWN

C8A

STD. PLAN C8A

Return to Table of Contents

DIST	COUNTY	ROUTE	KILOMETER POST TOTAL PROJECT	SHEET NO.	TOTAL SHEETS

REGISTERED CIVIL ENGINEER

July 1, 1997
PLANS APPROVAL DATE

The State of California or its officers or agents shall not be responsible for the accuracy or completeness of electronic copies of this plan sheet.

REGISTERED PROFESSIONAL ENGINEER
James C. Moese
No. C16576
Exp. 6-30-97
CIVIL
STATE OF CALIFORNIA

STRINGER MEMBERS REQUIRED PER CELL

WALL HEIGHT	SHORT STRINGERS IN FRONT OF WALL									SHORT STRINGERS IN REAR OF WALL								
	1.63		2.01		2.77		3.51		St'f	1.63		2.01		2.77		3.51		St'd
	St'd	Short	St'd	Short	St'd	Short	St'd	Short	St'r	St'd	Short	St'd	Short	St'd	Short	St'd	Short	St'r
Millimeters	2896	2743	2896	2743	2896	2743	2896	2743	St'f	2896	2743	2896	2743	2896	2743	2896	2743	St'f
1218	1	3							1	3	1							1
1624	2	4							1	4	2							1
2030	3	5							1	5	3							1
2436	4	6							1	6	4							1
2842	5	7							1	7	5							1
3248	6	8							1	8	6							1
3654	6	8							1	8	6							1
4060	6	8	2	2					1	8	6	2	2					1
4466	6	8	3	3					1	8	6	3	3					1
4872	6	8	4	4					1	8	6	4	4					1
5278	6	8	4	4	1	1			1	8	6	4	4	1	1			1
5684	6	8	4	4	2	2			1	8	6	4	4	2	2			1
6090	6	8	4	4	3	3			1	8	6	4	4	3	3			1
6496	6	8	4	4	4	4			1	8	6	4	4	4	4			1
6902	6	8	4	4	5	5			1	8	6	4	4	5	5			1
7308	6	8	4	4	6	6			1	8	6	4	4	6	6			1
7714	6	8	4	4	7	7			1	8	6	4	4	7	7			1
8120	6	8	4	4	7	7	1	1	1	8	6	4	4	7	7	1	1	1
8526	6	8	4	4	7	7	2	2	1	8	6	4	4	7	7	2	2	1
8932	6	8	4	4	7	7	3	3	1	8	6	4	4	7	7	3	3	1
9338	6	8	4	4	7	7	4	4	1	8	6	4	4	7	7	4	4	1
9744	6	8	4	4	7	7	5	5	1	8	6	4	4	7	7	5	5	1
10150	6	8	4	4	7	7	6	6	1	8	6	4	4	7	7	6	6	1
10556	6	8	4	4	7	7	7	7	1	8	6	4	4	7	7	7	7	1
10962	6	8	4	4	7	7	8	8	1	8	6	4	4	7	7	8	8	1

NOTE This table applies only to short panel sections for curved walls and includes stringers for both front and rear of a 2896 millimeter length of wall.

NOTE

This table applies only to standard panel sections and includes stringer members for both front and rear of a 3050 millimeter length of wall.

SPACER MEMBERS REQUIRED PER TRANSVERSE SECTION

WALL HEIGHT	BEARING PLATE	FRONT COLUMN HEIGHT IN MILLIMETERS				REAR COLUMN HEIGHT IN MILLIMETERS				Total Column Length in Millimeters	Column Splice	Column Cap	SPACERS (Thickness & Length)						BOTTOM SPACERS (Thickness & Length)						STRINGER MEMBERS REQUIRED PER CELL: STRINGERS				St'r St'f	WALL HEIGHT
		1st Lift	2nd Lift	3rd Lift	Total Height	1st Lift	2nd Lift	3rd Lift	Total Height				1.63	1.63	2.01	2.77	2.77	2.77	1.63	1.63	2.01	2.77	2.77	2.77	1.63	2.01	2.77	3.51		
Millimeters	405x560												1585	2255	2926	3597	4267	4938	1585	2255	2926	3597	4267	4938	2896	2896	2896	2896	2896	Millimeters
1218	2	1218			1218	406			406	1624		1							1						4				1	1218
1624	2	1624			1624	812			812	2436		1	1						1						6				1	1624
2030	2	2030			2030	1218			1218	3248		1	2						1						8				1	2030
2436	2	2436			2436	1624			1624	4060		1	3						1						10				1	2436
2842	2	2842			2842	2030			2030	4872		1	4						1						12				1	2842
3248	2	3248			3248	2436			2436	5684		1	5	5					1	1					14				1	3248
3654	2	3654			3654	2842			2842	6496		1		6						1					14	2			1	3654
4060	2	2436	1624		4060	3248			3248	7308	1	1		7						1					14	4			1	4060
4466	2	2436	2030		4466	3654			3654	8120	1	1		8	8					1	1				14	6			1	4466
4872	2	2436	2436		4872	2436	1624		4060	8932	2	1		9	9					1	1				14	8			1	4872
5278	2	3654	1624		5278	2436	2030		4466	9744	2	1		10	10					1	1				14	8	2		1	5278
5684	2	3654	2030		5684	2436	2436		4872	10556	2	1			11	11					1	1			14	8	4		1	5684
6090	2	3654	2436		6090	3654	1624		5278	11368	2	1			12	12					1	1			14	8	6		1	6090
6496	2	3654	2842		6496	3654	2030		5684	12180	2	1			13	13					1	1			14	8	8		1	6496
6902	2	3654	3248		6902	3654	2436		6090	12992	2	1				14	14					1	1		14	8	10		1	6902
7308	2	3654	3654		7308	3654	2842		6496	13804	2	1				15	15					1	1		14	8	12		1	7308
7714	2	3654	2436	1624	7714	3654	3248		6902	14616	3	1				16	16					1	1		14	8	14		1	7714
8120	2	3654	2436	2030	8120	3654	3654		7308	15428	3	1				17	17					1	1		14	8	14	2	1	8120
8526	2	3654	2436	2436	8526	3654	2436	1624	7714	16240	4	1					18	18					1	1	14	8	14	4	1	8526
8932	2	3654	3654	1624	8932	3654	2436	2030	8120	17052	4	1					19	19					1	1	14	8	14	6	1	8932
9338	2	3654	3654	2030	9338	3654	2436	2436	8526	17864	4	1					20	20					1	1	14	8	14	8	1	9338
9744	2	3654	3654	2436	9744	3654	3654	1624	8932	18676	4	1						21						1	14	8	14	10	1	9744
10150	2	3654	3654	2842	10150	3654	3654	2030	9338	19488	4	1						22						1	14	8	14	12	1	10150
10556	2	3654	3654	3248	10556	3654	3654	2436	9744	20300	4	1						23						1	14	8	14	14	1	10556
10962	2	3654	3654	3654	10962	3654	3654	2842	10150	21112	4	1						24						1	14	8	14	16	1	10962

NOTES

1. Use Graphs shown on Standard Plan C8C to determine the type of steel crib to use for the various surcharges on both vertical and batter walls.
2. For non-tangent wall alignment, special length stringers may be required.

STATE OF CALIFORNIA
DEPARTMENT OF TRANSPORTATION

STEEL CRIB WALL DESIGN DATA

NO SCALE

ALL DIMENSIONS ARE IN MILLIMETERS UNLESS OTHERWISE SHOWN

C8B

STD. PLAN C8B

Return to Table of Contents

DIST	COUNTY	ROUTE	KILOMETER POST TOTAL PROJECT	SHEET NO.	TOTAL SHEETS

Caltrans Metric

REGISTERED CIVIL ENGINEER

July 1, 1997
PLANS APPROVAL DATE

REGISTERED PROFESSIONAL ENGINEER James C. Moese No. C16576 Exp. 6-30-97 CIVIL STATE OF CALIFORNIA

The State of California or its officers or agents shall not be responsible for the accuracy or completeness of electronic copies of this plan sheet.

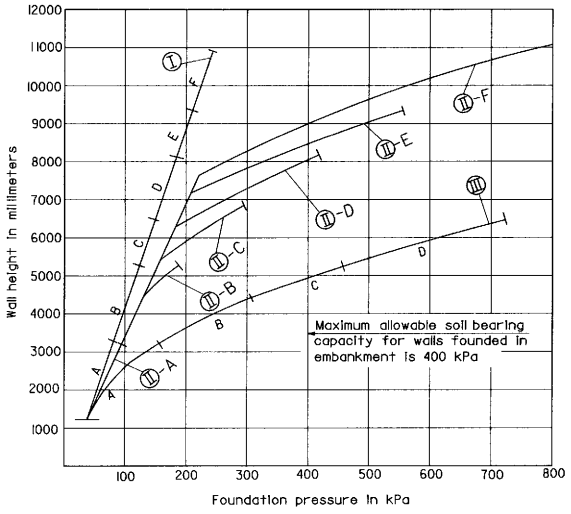

6 : 1 BATTERED WALL

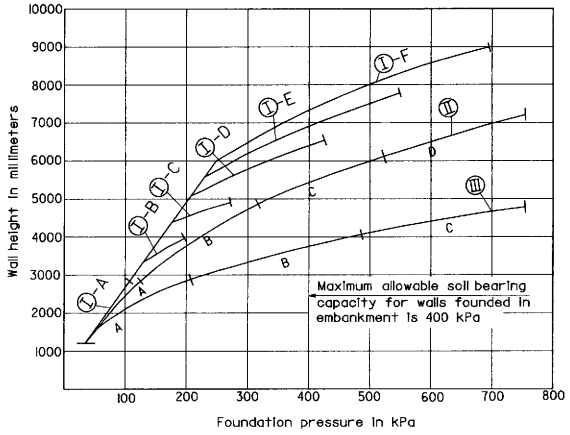

VERTICAL WALL

DESIGN NOTES

1. Wall base in embankment: A minimum depth of 1500 millimeters of embankment at 95% relative soil compaction is required below the base of all walls in order to constitute an embankment condition. When the foundation pressure is between 240 and 400 kPa, embankment below the wall shall consist of "Structure Backfill" material as set forth in Section 19-3.06 of the Standard Specifications. The limits of relative compaction (95 percent) shall be as set forth in Section 19-5.03 of the Standard Specifications.

2. Wall base in original ground: Allowable soil pressure at toe of wall shall be determined by foundation site investigation. Walls that are to retain cut slopes shall be designed for lateral and toe pressures determined from site investigation data. Overall stability of slope with wall in place must be analyzed. If original ground slopes away from toe of wall, reduction in allowable bearing capacity due to slope must be considered. Walls shall not be founded in original ground having an allowable bearing capacity of less than 145 kPa. Consideration should be given to removal and replacement of unsuitable material with "Structure Backfill" material as set forth in Section 19-3.06 of the Standard Specifications. The limits of relative compaction (95 percent) shall be as set forth in Section 19-5.03 of the Standard Specifications.

3. Drainage:
   a. Internal: Section 19-3.06 of the Standard Specifications.
   b. External: If the combined height of wall and overfill (measured along face of wall and vertically from the toe of fill to top of fill) exceeds 7600 millimeters a system to drain water away from the back face of wall shall be provided. The type and extent of this system will depend on the type of backfill material expected to be used, the combined height of wall and backfill, and the location of the water table in the area.

4. Sloping Surcharge Limitations: The maximum height of fill behind any wall, or family of walls, shall not exceed 35 meters (measured vertically from the toe of the bottom wall to the top of fill behind the uppermost wall). For a family of walls the slope of a line drawn from the top of the front face of the bottom wall to the top of the front face of any intermediate or top wall, shall in no case be steeper than 1:1.5.

Material Specifications:

Steel sheets:
AASHTO M218
310 275 kPa Ultimate
227 535 kPa Yield
@ 20% Elongation
Bolts: ASTM A307 Grade A

DESIGN EXAMPLES

EXAMPLE NO. 1

Given: Wall height 7300 millimeters.
Design loading Case II.
35 meters maximum from toe of wall to top of slope.
Base in embankment (1500 millimeters depth minimum).

Select: 6:1 Battered wall. Vertical wall not permitted. Type D wall selected.
Maximum height on graph is 8050 millimeters at 400 kPa. Since the foundation pressure is 305 kPa at 7300 millimeters, the wall must be founded on a 1500 millimeters thickness of "Structure Backfill" (See Design Note 1).
A drainage system behind this wall will be required.

EXAMPLE NO. 2

Given: Wall height 8800 millimeters.
Design loading Case II. Foundation site investigation indicates lateral pressure from material above will be equivalent to 1:2 embankment slope. Base in excavation level at toe of wall. Foundation investigation determines the allowable soil bearing capacity at 300 kPa.

Select: Battered Type F wall maximum height at 400 kPa is 9000 millimeters, therefore the replacement of 1500 millimeters of excavation with "Structure Backfill" to increase the allowable soil bearing capacity to 400 kPa is required (See Design Note 1). A drainage system for this wall should be investigated.

EXAMPLE NO. 3

Given: Wall height 4600 millimeters.
Design loading Case III with overall height less than 35 millimeters. Base on original ground. Foundation investigation determines allowable soil bearing capacity at 200 kPa.

Select: Use a Type C Battered Wall. However foundation pressure exceeds 200 kPa, therefore the replacement of 1500 millimeters of excavation with "Structure Backfill" to increase the allowable soil bearing capacity to 400 kPa is required (See Design Note 1).

LEGEND FOR GRAPHS

A, B, C, D, E, F = Wall Type
I, II, III = Loading Case

- For description of loading case, see detail of design loading cases.
- Upper end of line indicates maximum wall height for a given wall type.

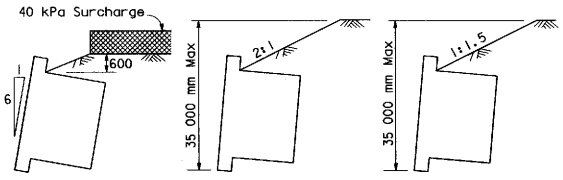

CASE I CASE II CASE III

DETAIL OF DESIGN LOADING CASES

Note: Similar loading cases for vertical wall.

NOTE

For construction details see Sheet C8A.

STATE OF CALIFORNIA
DEPARTMENT OF TRANSPORTATION

STEEL CRIB WALL DESIGN DATA

NO SCALE

ALL DIMENSIONS ARE IN MILLIMETERS UNLESS OTHERWISE SHOWN

C8C

Return to Table of Contents

DIST	COUNTY	ROUTE	KILOMETER POST TOTAL PROJECT	SHEET NO.	TOTAL SHEETS

REGISTERED CIVIL ENGINEER

July 1, 1997
PLANS APPROVAL DATE

The State of California or its officers or agents shall not be responsible for the accuracy or completeness of electronic copies of this plan sheet.

REGISTERED PROFESSIONAL ENGINEER James C. Moore No. C16576 Exp. 6-30-97 CIVIL STATE OF CALIFORNIA

Metric

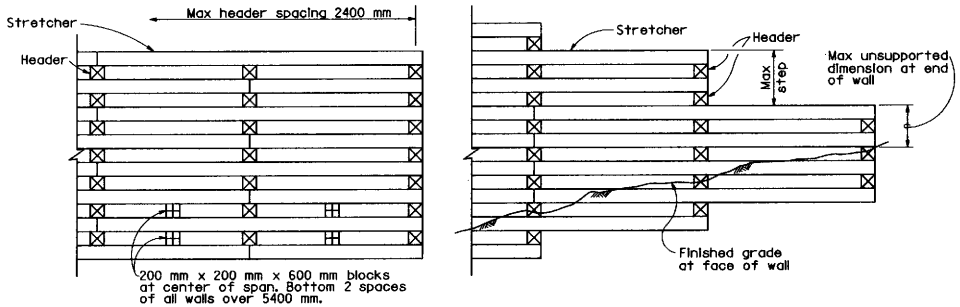

OPEN FACE CRIB PARTIAL ELEVATIONS

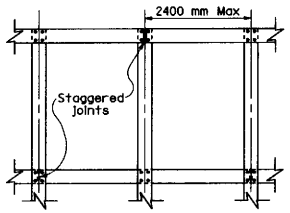

TYPICAL PLAN VIEW

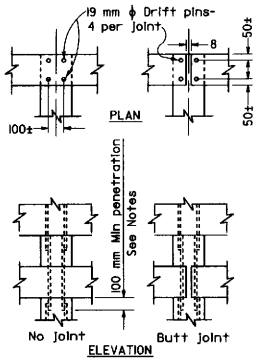

TYPICAL END CONNECTIONS

TIMBER PER 2400 mm CRIB SECTION					
HEIGHT	HEADERS				STRET-
OF WALL	1800	2400	3000	3600	CHERS
1400	3				8
1800	4				10
2200	5				12
2600	4	2			14
3000	5	2			16
3400	5	3			18
3800	5	4			20
4200	5	3	2		22
4600	5	4	2		24
5000	5	4	3		26
5400	5	4	4		28
5800	5	4	3	2	33
6200	5	4	4	2	38
6600	5	4	4	3	43

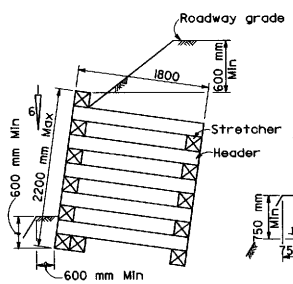

TYPE A

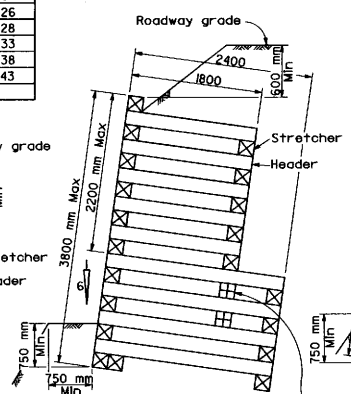

TYPE B

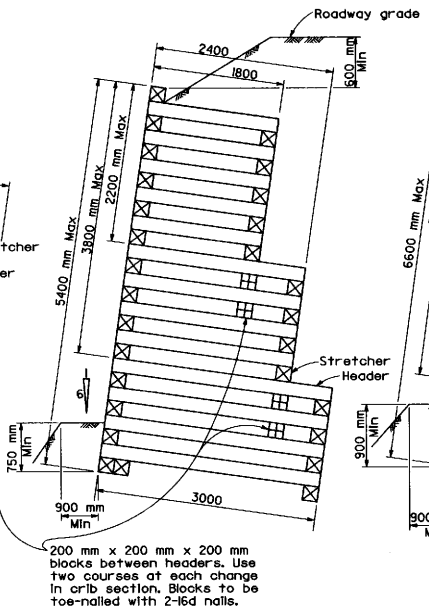

TYPE C

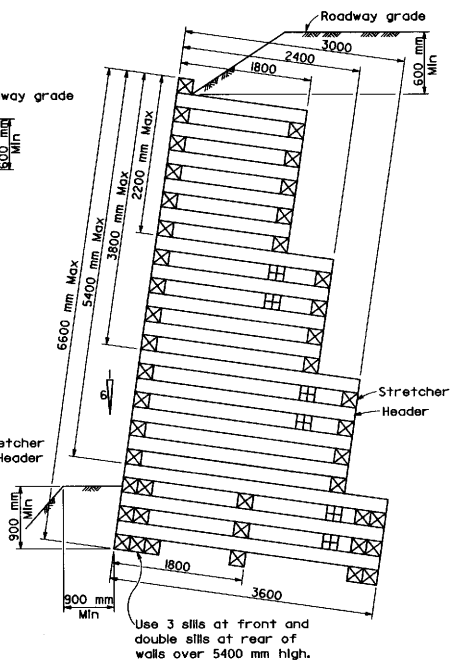

TYPE D

NOTES

1. All timber to be treated 200 mm x 200 mm full sawn No. 1 grade douglas fir-larch. All members to be pre-cut before treatment.
2. Drift pins and holes to be 19 mm ϕ.
3. Drift pins to be of sufficient length to penetrate thru 2 members and 100 mm minimum into the third member. Drift pins shall cross each contact joint between headers and stretchers. Pins may lap, provided edge or end distance to pins is not less than 45 mm.
4. All stretchers to be laid horizontal.
5. Vertical walls are not permitted.
6. Maximum allowable height is 6600 mm.
7. All walls 5400 mm high or under shall have double sills at front and single sill at rear. When wall exceeds 2200 mm, 3800 mm, or 5400 mm, use a minimum of two courses of next longer headers.
8. For Design Data see Standard Plan C9B.

STATE OF CALIFORNIA
DEPARTMENT OF TRANSPORTATION

TIMBER CRIB WALL TYPES A, B, C AND D

NO SCALE

ALL DIMENSIONS ARE IN MILLIMETERS UNLESS OTHERWISE SHOWN

C9A

STD. PLAN C9A

Return to Table of Contents

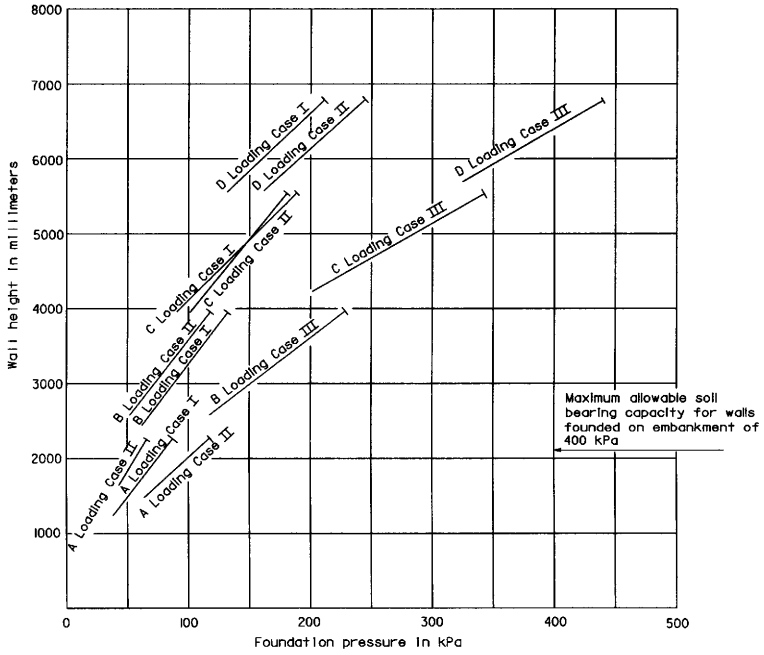

6:1 BATTERED WALL

LEGEND FOR GRAPH

- A, B, C, D = Wall type.
- Solid lines indicate normal range of wall use. Upper end of line indicates maximum wall height for a given wall type and loading.
- For description of loading case see DETAIL OF DESIGN LOADING CASES.

DESIGN NOTES

1. WALL BASE IN EMBANKMENT: A minimum depth of 1500 mm of embankment at 95% relative soil compaction is required below the base of all walls in order to constitute an embankment condition. When the foundation pressure is between 240 kPa and 400 kPa embankment below the wall shall consist of "Structure backfill" material as set forth in Section 19-3.06 of the Standard Specifications. The limits of relative compaction (95%) shall be as set forth in Section 19-5.03 of the Standard Specifications.
2. WALL BASE IN ORIGINAL GROUND: Allowable soil pressure at toe of wall shall be determined by foundation site investigation. Walls that are to retain cut slopes shall be designed for lateral and toe pressures determined from site investigation data. Overall stability of slope with wall in place must be analyzed. If original ground slopes away from toe of wall, reduction in allowable bearing capacity due to slope must be considered. Walls shall not be founded in original ground having an allowable bearing capacity of less than 145 kPa. Consideration should be given to removal and replacement of unsuitable material with "Structure backfill" material as set forth in Section 19-3.06 of the Standard Specifications. The limits of relative compaction (95%) shall be as set forth in Section 19-5.03 of the Standard Specifications.
3. Soil Parameters:
   Backfill - $\phi = 34°$, $\gamma_b = 19\ kN/m^3$
   Foundation - $\phi = 34°$
   Lateral earth pressure determined by Rankine Theory.

Metric

DIST	COUNTY	ROUTE	KILOMETER POST TOTAL PROJECT	SHEET NO.	TOTAL SHEETS

REGISTERED CIVIL ENGINEER

July 1, 1997
PLANS APPROVAL DATE

REGISTERED PROFESSIONAL ENGINEER James C. Moser No. C16576 Exp. 6-30-97 CIVIL STATE OF CALIFORNIA

The State of California or its officers or agents shall not be responsible for the accuracy or completeness of electronic copies of this plan sheet.

DESIGN EXAMPLES

EXAMPLE NO. 1

Given: Wall height 4200 mm
Design Loading Case II.
Base in embankment (1500 mm depth minimum See Note 1)

Select: 6:1 batter C wall gives 115 kPa foundation pressure.
Vertical Wall not permitted.
See chart for required numbers and sizes of timber members.

EXAMPLE NO. 2

Given: Wall height 5800 mm
Design Loading Case III. Base is in original ground.
Foundation site investigation determines the allowable soil bearing capacity at 300 kPa.

Select: 6:1 batter D wall gives 335 kPa foundation pressure.
Vertical wall not permitted. Since foundation pressure is greater than allowable bearing capacity of native material, replace original material with "Structure backfill" to increase base bearing capacity. (See Note 2)

EXAMPLE NO. 3

Given: Wall height 6600 mm
Design Loading Case II. Base is in embankment. (See Note 1)

Select: 6:1 batter D wall gives 230 kPa foundation pressure.
Vertical wall not permitted. Foundation pressure is less than 240 kPa. Base material below wall shall be compacted to a relative compaction of 95%. (See Note 1).

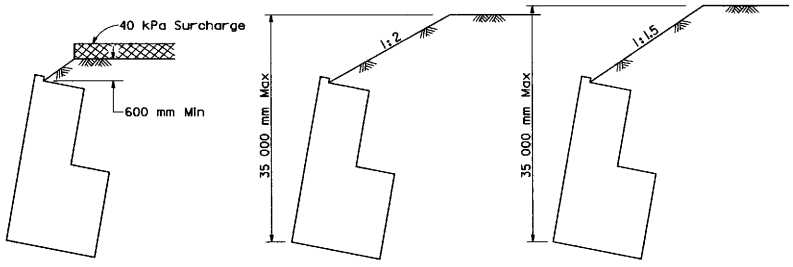

CASE I CASE II CASE III

DETAIL OF DESIGN LOADING CASES

STATE OF CALIFORNIA
DEPARTMENT OF TRANSPORTATION

TIMBER CRIB WALL TYPES A,B,C AND D DESIGN DATA

NO SCALE

ALL DIMENSIONS ARE IN MILLIMETERS UNLESS OTHERWISE SHOWN

C9B

Return to Table of Contents

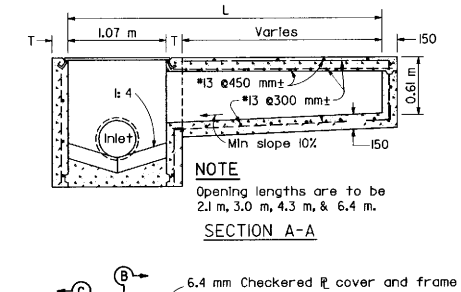

NOTE

Opening lengths are to be 2.1 m, 3.0 m, 4.3 m, & 6.4 m.

SECTION A-A

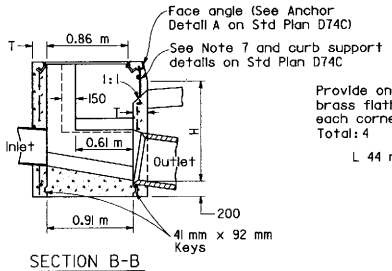

SECTION B-B

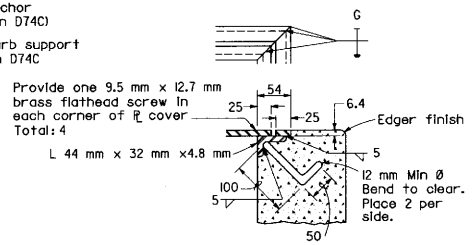

SECTION C-C

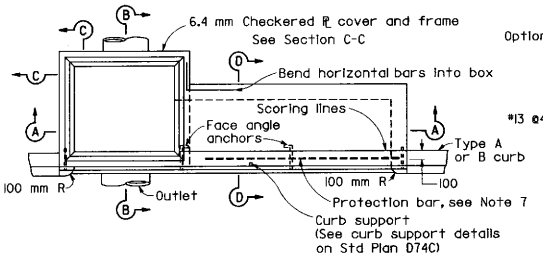

PLAN

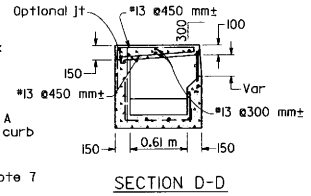

SECTION D-D

TYPE OL

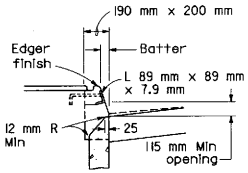

TYPE A CURBS

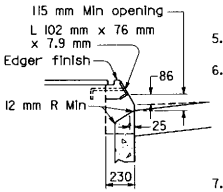

TYPE B CURBS

CURB OPENING DETAILS

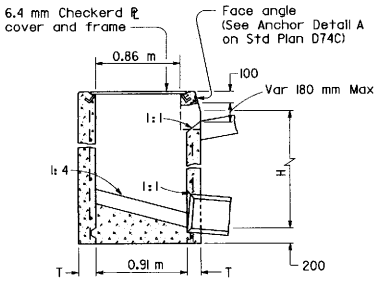

SECTION E-E

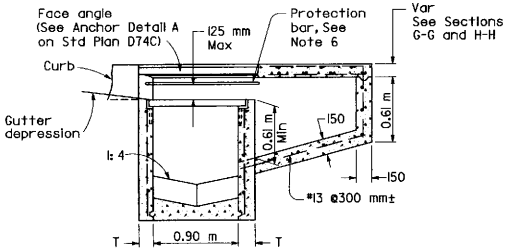

SECTION F-F

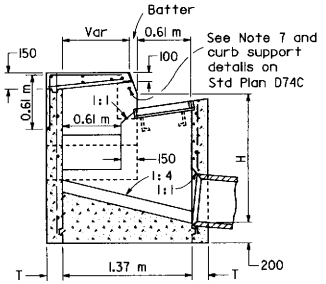

SECTION G-G

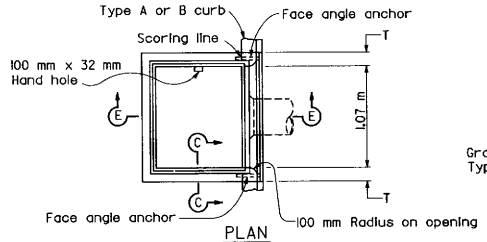

PLAN

TYPE OS

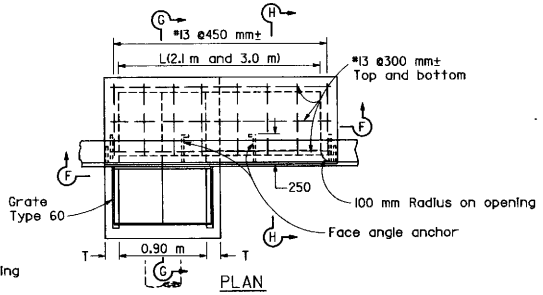

PLAN

TYPE GOL

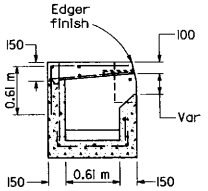

SECTION H-H

NOTES

1. "H" is the difference in elevation between the outlet pipe flow line and the normal gutter grade line undepressed at the curb face.
2. For "T" wall thickness, see Table A below.
3. Height of curb opening will vary with the type of curb and the depth of the local depression.
4. Wall reinforcing not required when "H" is 2.5 m or less and the unsupported width or length is 2.1 m or less. Walls exceeding these limits shall be reinforced with #13 bars @ 450 mm± centers placed 40 mm clear to inside of box unless otherwise shown.
5. Inlet bottom reinforcing not required. See Standard Plan D74C for alternative reinforced bottom.
6. Steps- None required where "H" is less than 0.75 m. Where "H" is 0.75 m or more, install steps with lowest rung 300 mm above the floor and highest rung not more than 150 mm below top of inlet. The distance between steps shall not exceed 300 mm and be uniform throughout the length of the wall. Place steps in the wall without an opening. Step inserts may be substituted for the bar steps. Step inserts shall comply with State Industrial Safety requirements. See Standard Plan D74C for step details.
7. When shown on the project plans, place a #19 protection bar horizontally across the length of the opening and bend back 100 mm into the inlet wall on each side.
8. Pipe(s) can be placed in any wall.
9. Curb section shall match adjacent curb.
10. Except for inlets used as junction boxes, basin floor shall have a minimum slope of 1:4 from all directions toward outlet pipe and shall have a wood trowel finish.
11. Galvanizing-See Standard Specifications or Special Provisions.
12. See Standard Plans D77A and D77B for grate and frame details and masses of miscellaneous iron and steel.
13. See Standard Plan D78 for gutter depression details.
14. Full penetration butt welds may be substituted for the fillet welds on all anchors.
15. Standard square, hexagon, round or equivalent headed anchors may be substituted for the right angle hooks on the anchors shown on this plan.
16. 16. Cast-in-place or precast alternative is optional with contractor. See Standard Specifications.

TABLE A

CONCRETE QUANTITIES				
Type	H=0.90 m to 2.50 m (T=150 mm)		H=2.51m to 6.00 m (T=200 mm)	
	H=0.90 m (m^3)	Additional PCC per meter (m^3)	H=2.51 m (m^3)	Additional PCC per meter (m^3)
OS	1.04	0.69	2.91	0.96
OL-2.1	1.42	0.69	3.28	0.96
OL-3.0	1.77	0.69	3.65	0.96
OL-4.3	2.26	0.69	4.17	0.96
OL-6.4	3.33 *	0.69	5.18	0.96
GOL-2.1	1.72	0.78	3.79	1.07
GOL-3.0	2.10	0.78	4.18	1.07

*Based on H=0.95 m

Table based on 200 mm floor slab, no deduction for pipe openings, 180 mm curb openings, and curb type giving highest quantity of concrete. No deductions or adjustments are to be made to these quantities because of pipe openings, different floor alternatives, different curb types or different height of curb openings.

STATE OF CALIFORNIA
DEPARTMENT OF TRANSPORTATION

DRAINAGE INLETS

NO SCALE

ALL DIMENSIONS ARE IN MILLIMETERS UNLESS OTHERWISE SHOWN

D72

Caltrans Metric

DIST	COUNTY	ROUTE	KILOMETER POST TOTAL PROJECT	SHEET NO.	TOTAL SHEETS

REGISTERED CIVIL ENGINEER

July 1, 1997
PLANS APPROVAL DATE

REGISTERED PROFESSIONAL ENGINEER Glenn DeCou No. C34547 Exp. 9-30-99 CIVIL STATE OF CALIFORNIA

The State of California or its officers or agents shall not be responsible for the accuracy or completeness of electronic copies of this plan sheet.

STD. PLAN D72

Return to Table of Contents

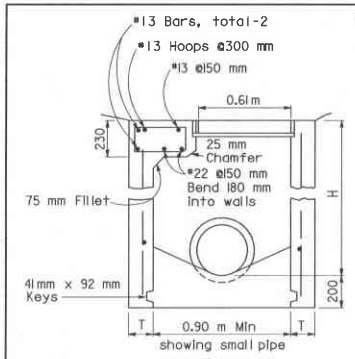

SECTION B-B

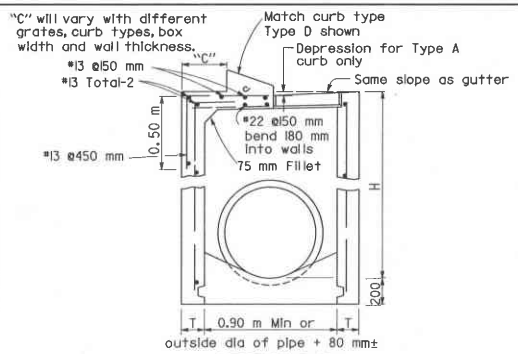

SECTION D-D

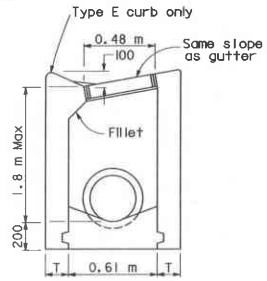

SECTION F-F

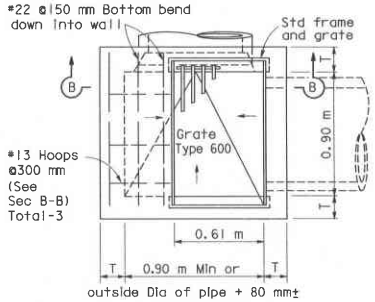

TYPE G2

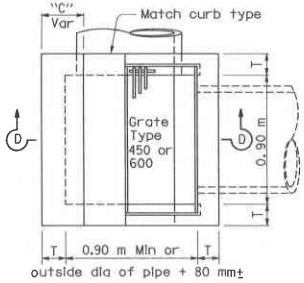

TYPE G4

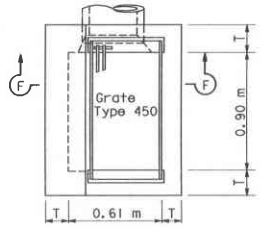

TYPE G6

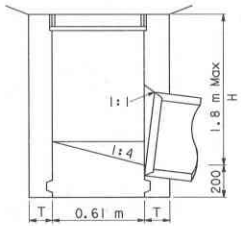

SECTION A-A

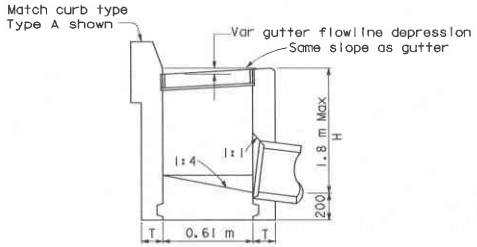

SECTION C-C

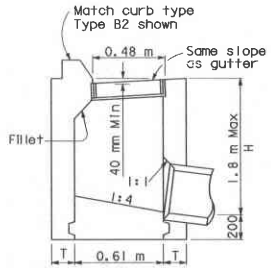

SECTION E-E

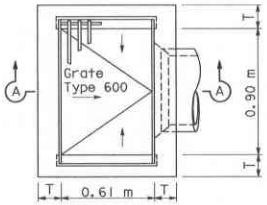

TYPE G1

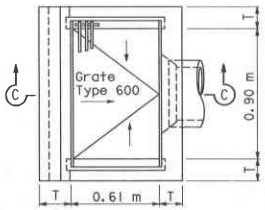

TYPE G3

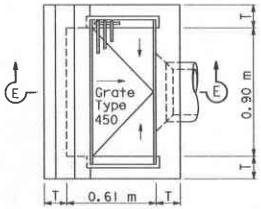

TYPE G5

DIST	COUNTY	ROUTE	KILOMETER POST TOTAL PROJECT	SHEET NO.	TOTAL SHEETS

REGISTERED CIVIL ENGINEER

July 1, 1997
PLANS APPROVAL DATE

Glenn DeCou No. C34547 Exp. 9-30-99 CIVIL — REGISTERED PROFESSIONAL ENGINEER — STATE OF CALIFORNIA

The State of California or its officers or agents shall not be responsible for the accuracy or completeness of electronic copies of this plan sheet.

NOTES

1. "H" is the difference in elevation between the outlet pipe flow line and the normal gutter grade line undepressed.
2. For "T" wall thickness, see Table A below.
3. Wall reinforcing not required when "H" is 2.5 m or less and the unsupported width or length is 2.1m or less. Walls exceeding these limits shall be reinforced with #13 bars @ 450 mm± centers placed 40 mm clear to inside of box unless otherwise shown.
4. Inlet bottom reinforcing not required. See Standard Plan D74C for alternative reinforced bottom and alternative half round bottom.
5. Steps-None required where "H" is less than 0.75 m. Where "H" is 0.75 m or more, install steps with lowest rung 300 mm above the floor and highest rung not more than 150 mm below top of inlet. The distance between steps shall not exceed 300 mm and shall be uniform throughout the length of the wall. Place steps in the wall without an opening. Step inserts may be substituted for the bar steps. Step inserts shall comply with State Industrial Safety requirments. See Standard Plan D74C for step details.
6. Details shown apply to both metal and concrete pipe.
7. Pipe(s) can be placed in any wall.
8. Curb section shall match adjacent curb.
9. Basin floors shall have wood trowel finish and a minimum slope of 1:4 from all directions toward outlet pipe.
10. Galvanizing-See Standard Specifications or Special Provisions
11. Cast-in-place or Precast alternative is optional with contractor, See Standard Specifications.
12. Set inlet so that grate bars are parallel to direction of principal surface flow.
13. See Standard Plans D77A and D77B for grate and frame details and masses of miscellaneous iron and steel.
14. See Standard Plan D78 for gutter depression details.

TABLE A

CONCRETE QUANTITIES				
	H=0.90 m to 2.50 m (T=150 mm)		H=2.51 m to 6.00 m (T=200 mm)	
Type	H=0.90 m (m^3)	Additional PCC per meter (m^3)	H=2.51 m (m^3)	Additional PCC per meter (m^3)
G-1	0.69	0.55	(1)	(1)
G-2*	0.91	0.63	2.65	0.88
G-3	0.75	0.55	(1)	(1)
G-4* (Type 600)	0.93	0.63	2.67	0.88
G-4* (Type 450)	0.95	0.63	2.69	0.88
G-5	0.75	0.55	(1)	(1)
G-6	0.76	0.55	(1)	(1)

(1) Maximum allowable height 1.8 m. Table based on 200 mm floor slab. No deductions are to be made to these quantities because of pipe openings, different floor alternatives or different curb types. * Quantities for Type G-2 and G-4 inlets based on the minimum interior dimensions shown.

STATE OF CALIFORNIA
DEPARTMENT OF TRANSPORTATION

DRAINAGE INLETS

NO SCALE

ALL DIMENSIONS ARE IN MILLIMETERS UNLESS OTHERWISE SHOWN

D73

STD. PLAN D73

Return to Table of Contents

DIST	COUNTY	ROUTE	KILOMETER POST TOTAL PROJECT	SHEET NO.	TOTAL SHEETS

REGISTERED CIVIL ENGINEER

July 1, 1997
PLANS APPROVAL DATE

Glenn DeCou
No. C34547
Exp. 9-30-99
CIVIL
STATE OF CALIFORNIA
REGISTERED PROFESSIONAL ENGINEER

The State of California or its officers or agents shall not be responsible for the accuracy or completeness of electronic copies of this plan sheet.

Metric

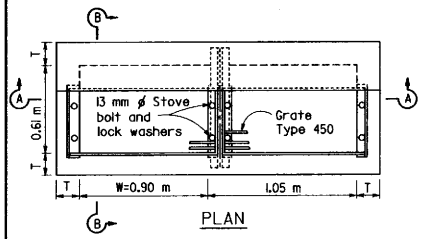

PLAN

TYPE GTI

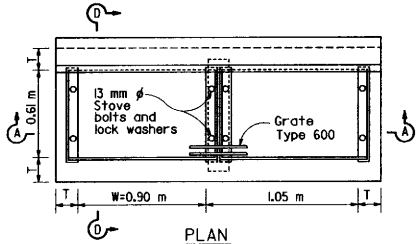

PLAN

TYPE GT3

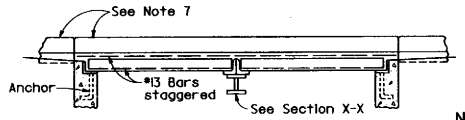

SECTION A-A

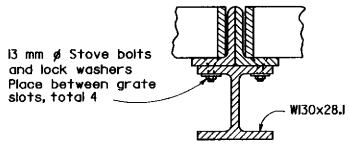

SECTION X-X

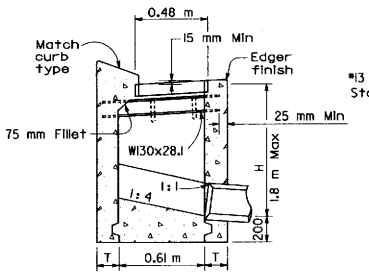

SECTION B-B

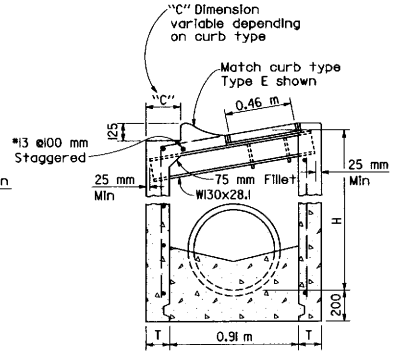

SECTION C-C

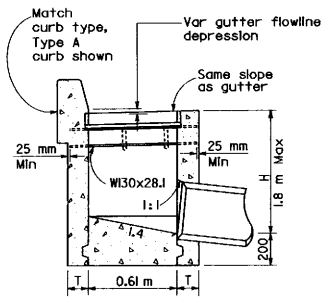

SECTION D-D

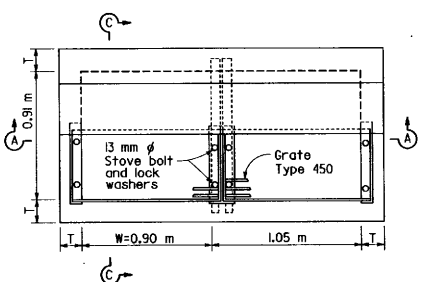

PLAN

TYPE GT2

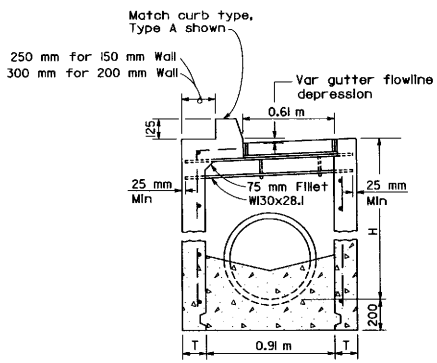

SECTION E-E

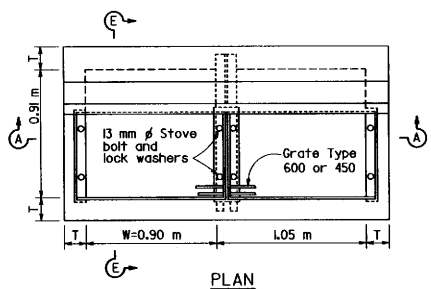

PLAN

TYPE GT4

NOTES

1. "H" is the difference in elevation between the outlet pipe flow line and the normal gutter grade line undepressed.
2. For "T" wall thickness, see Table A below.
3. Wall reinforcing not required when "H" is 2.5 m or less and the unsupported width or length is 2.1 m or less. Walls exceeding these limits shall be reinforced with #13 bars @ 450 mm± centers placed 40 mm clear to inside of box unless otherwise shown
4. Inlet bottom reinforcing not required. See Standard Plan D74C for alternative reinforced bottom.
5. Steps - None required where "H" is less than 0.75 m. Where "H" is 0.75 m or more, install steps with lowest rung 300 mm above the floor and highest rung not more than 150 mm below top of inlet. The distance between steps shall not exceed 300 mm and shall be uniform throughout the length of the wall. Place steps in the wall without an opening. Step inserts may be substituted for the bar steps. Step inserts shall comply with State Industrial Safety requirement. See Standard Plan D74C for step details.
6. Pipe(s) can be placed in any wall.
7. Curb section shall match adjacent curb.
8. Basin floors shall have wood trowell finish and a minimum slope of 1:4 from all directions toward outlet pipe.
9. Galvanizing - See Standard Specifications or Special Provisions.
10. W = 0.90 m for one grate. Add 1.05 m for additional grates in tandem.
11. See Standard Plans D77A and D77B for grate and frame details and masses of miscellaneous iron and steel.
12. See Standard Plan D78 for gutter depression details.
13. Full penetration butt welds may be substituted for the fillet welds on all anchors.
14. Standard square, hexagon, round or equivalent headed anchors may be substituted for the right angle hooks on the anchors shown on this plan.
15. Cast-in-place or precast alternative is optional with contractor. See Standard Specifications.

TABLE A

CONCRETE QUANTITIES

TYPE	H=0.90 m TO 2.50 m (T=150 mm)		H=2.51 m TO 6.00 m (T=200 mm)	
	H=0.90 m (m^3)	ADDITIONAL PCC PER METER (m^3)	H=2.51 m	ADDITIONAL PCC PER METER (m^3)
GT1	1.28	0.87	(1)	(1)
GT2	1.55	0.96	4.08	1.31
GT3	1.27	0.87	(1)	(1)
GT4	1.60	0.96	4.09	1.31

(1) Maximum allowable height = 1.8 m

Table based on 200 mm floor slab, no deduction for pipe openings, and curb type giving highest quantity of concrete.
No deductions or adjustments are to be made to these quantities because of pipe openings, different floor alternatives or different curb type.

STATE OF CALIFORNIA
DEPARTMENT OF TRANSPORTATION

DRAINAGE INLETS

NO SCALE

ALL DIMENSIONS ARE IN MILLIMETERS UNLESS OTHERWISE SHOWN

D74A

Return to Table of Contents

DIST	COUNTY	ROUTE	KILOMETER POST TOTAL PROJECT	SHEET NO.	TOTAL SHEETS

Caltrans Metric

REGISTERED CIVIL ENGINEER

July 1, 1997
PLANS APPROVAL DATE

REGISTERED PROFESSIONAL ENGINEER Glenn DeCou No. C34547 Exp. 9-30-99 CIVIL STATE OF CALIFORNIA

The State of California or its officers or agents shall not be responsible for the accuracy or completeness of electronic copies of this plan sheet.

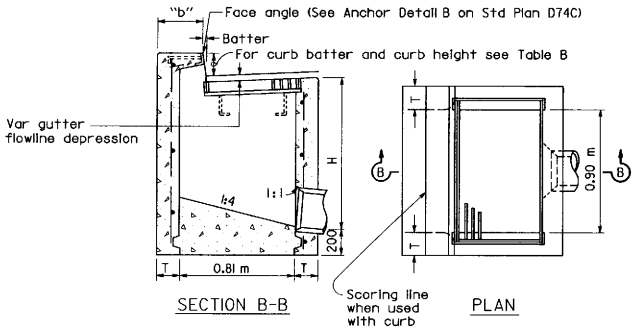

SECTION B-B

PLAN

TYPE GO

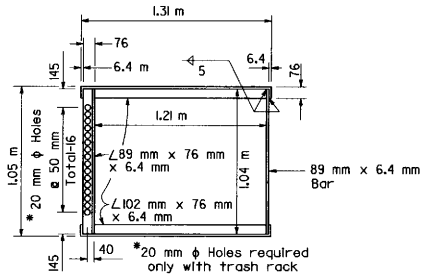

GRATE FRAME FOR TYPE GDO INLET

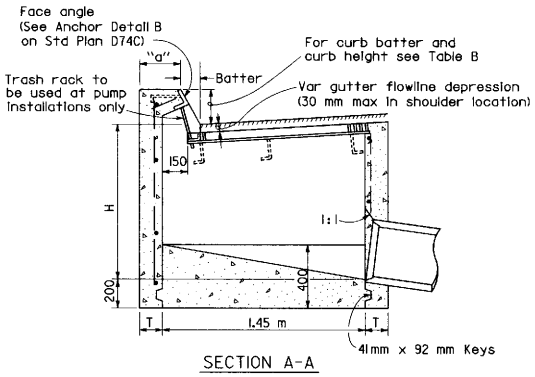

SECTION A-A

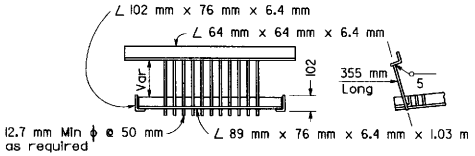

TRASH RACK

(For use with pump installation)

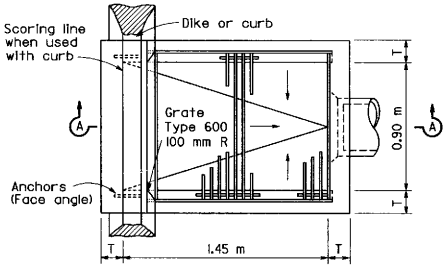

PLAN

TYPE GDO

TABLE B

CURB TYPE	NORMAL CURB HEIGHT	CURB BATTER	"a" DIMENSION	"b" DIMENSION
A-150	150	40	T+190	T+160
A-200	200	50	T+180	T+150
B	150	100	T+130	T+100
Dike	150	75	T+155	T+125

TABLE A

CONCRETE QUANTITIES

TYPE	H=0.90 m TO 2.50 m (T=150 mm)		H=2.51m TO 6.00 m (T=200 mm)	
	H=0.90 m (m^3)	ADDITIONAL PCC PER METER (m^3)	H=2.51m (m^3)	ADDITIONAL PCC PER METER (m^3)
GO	0.91	0.61	2.57	0.86
GDO	1.21	0.80	3.33	1.11

Table based on 200 mm floor slab, no deduction for pipe openings, and curb type giving highest quantity of concrete. No deductions or adjustments are to be made to these quantities because of pipe openings, different floor alternatives or different curb type.

NOTES

1. "H" is the difference in elevation between the outlet pipe flow line and the normal gutter grade line undepressed.
2. For "T" wall thickness, see Table A below.
3. Wall reinforcing not required when "H" is 2.5 m or less and the unsupported width or length is 2.1 m or less. Walls exceeding these limits shall be reinforced with #13 bars @ 450 mm± centers placed 40 mm clear to inside of box unless otherwise shown.
4. Inlet bottom reinforcing not required. See Standard Plan D74C for alternative reinforced bottom.
5. Steps - None required where "H" is less than 0.75 m. Where "H" is 0.75 m or more, install steps with lowest rung 300 mm above the floor and highest rung not more than 150 mm below top of inlet. The distance between steps shall not exceed 300 mm and shall be uniform throughout the length of the wall. Place steps in the wall without an opening. Step inserts may be substituted for the bar steps. Step inserts shall comply with State Industrial Safety requirements. See Standard Plan D74C for step details.
6. When shown on the project plans, place a #19 protection bar horizontally across the length of the opening and bend back 100 mm into the inlet wall on each side.
7. Pipe(s) can be placed in any wall.
8. Curb section shall match adjacent curb.
9. Basin floors shall have wood trowel finish and shall slope toward the outlet pipe as shown.
10. Galvanizing - See Standard Specifications or Special Provisions.
11. See Standard Plan D77A and D77B for grate and frame details and masses of miscellaneous iron and Steel.
12. See Standard Plan D78 for gutter depression details.
13. Full penetration butt welds may be substituted for the fillet welds on all anchors.
14. Standard square, hexagon, round or equivalent headed anchors may be substituted for the right angle hooks on the anchors shown on this plan.
15. Cast-in-place or precast alternative is optional with contractor. See Standard Specifications.

STATE OF CALIFORNIA
DEPARTMENT OF TRANSPORTATION

DRAINAGE INLETS

NO SCALE

ALL DIMENSIONS ARE IN MILLIMETERS UNLESS OTHERWISE SHOWN

D74B

STD. PLAN D74B

Return to Table of Contents

DIST	COUNTY	ROUTE	KILOMETER POST TOTAL PROJECT	SHEET NO.	TOTAL SHEETS

Caltrans Metric

REGISTERED CIVIL ENGINEER

July 1, 1997
PLANS APPROVAL DATE

REGISTERED PROFESSIONAL ENGINEER Glenn DeCou No. C34547 Exp. 9-30-99 CIVIL STATE OF CALIFORNIA

The State of California or its officers or agents shall not be responsible for the accuracy or completeness of electronic copies of this plan sheet.

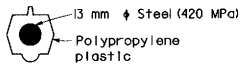

TYPICAL SECTION
(STEP INSERT)

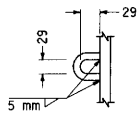

STIRRUP

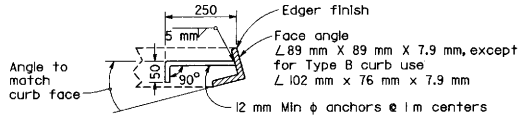

FACE ANGLE ANCHOR DETAIL A

FACE ANGLE DETAIL A	
Length of Curb Opening	No of Anchors
1.1 m or Less	2
2.1 m	3
3.0 m	4
4.3 m	5
6.4 m	7

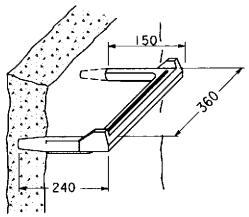

STEP INSERT

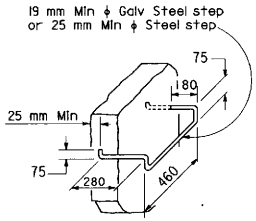

BAR STEP

STEP DETAILS

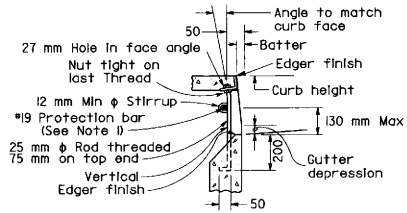

CURB SUPPORT DETAIL
See Note 2

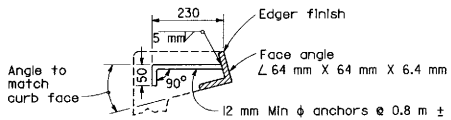

FACE ANGLE ANCHOR DETAIL B

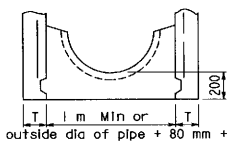

ALTERNATIVE
HALF ROUND BOTTOM

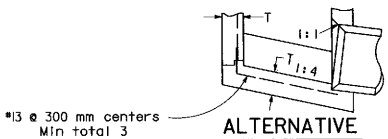

ALTERNATIVE
REINFORCED BOTTOM

NOTES

1. When shown on the project plans, place a *19 protection bar horizontally across length of the opening and bend back 100 mm into the inlet wall on each side.
2. Curb supports shall be evenly spaced and minimal in number such that maximum span of unsupported curb is 2.1 m.

STATE OF CALIFORNIA
DEPARTMENT OF TRANSPORTATION

DRAINAGE INLET DETAILS

NO SCALE

ALL DIMENSIONS ARE IN MILLIMETERS UNLESS OTHERWISE SHOWN

D74C

STD. PLAN D74C

Return to Table of Contents

NOTE TO DESIGNER

Do not use redwood covers where there is a possibility of wheel loads. Where there is a possibility of wheel loads use Type GCP inlet.

One or more wall openings can be used. Location and number as ordered by the engineer.

Opening may be cast in pipe.

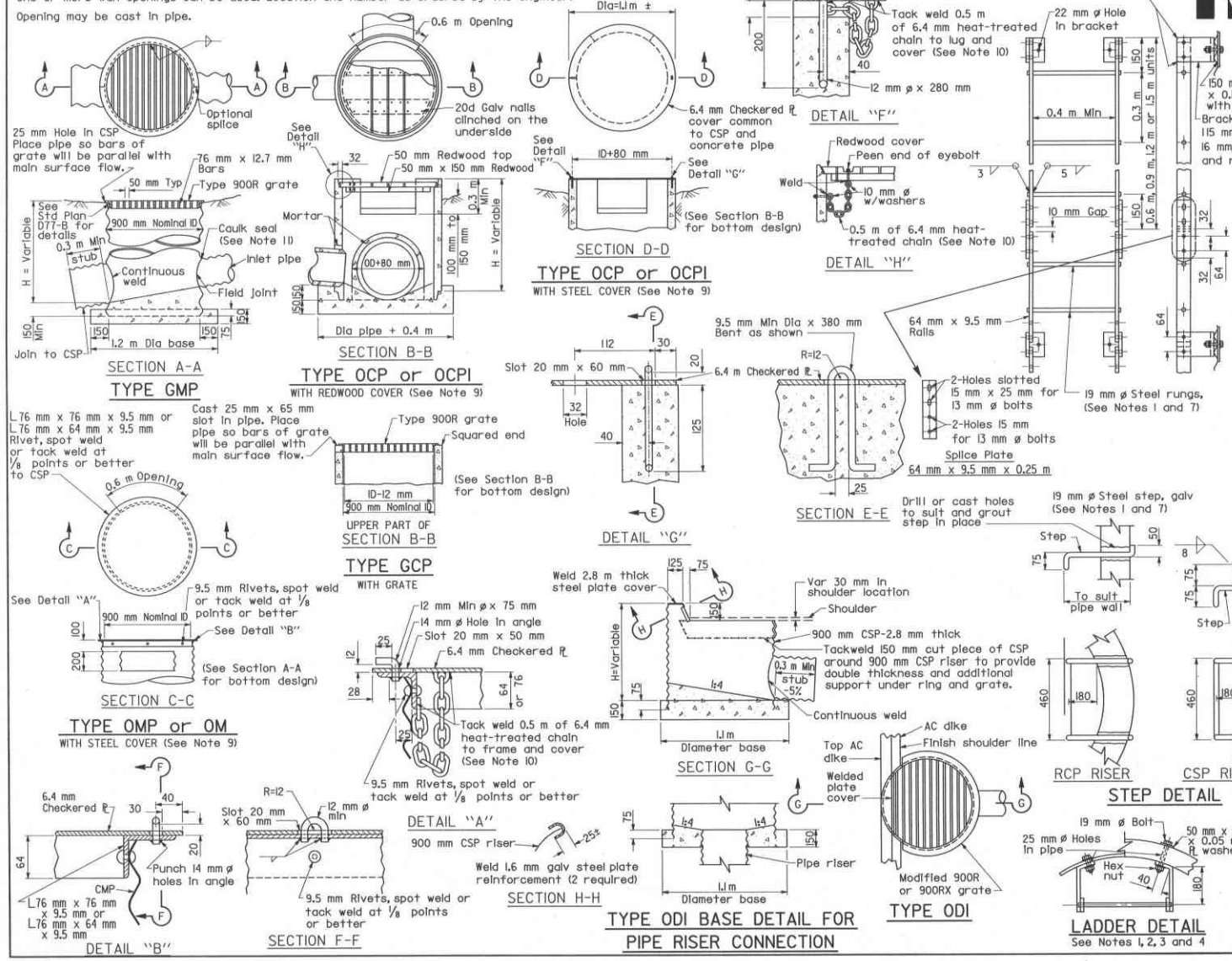

NOTES

1. Ladders and Steps - None required where "H" is less than 0.75 m. Where "H" is 0.75 m or more, install steps or ladder with lowest rung not more than 0.3 m above the floor and highest rung not more than 0.3 m below top of inlet. The distance between steps or rungs shall not exceed 0.3 m and shall be uniform throughout the length of the wall. Place steps or ladder in the wall without an opening.
2. Ladder may be constructed in one length at contractor's option on RCP riser.
3. On CSP riser, connect ladder splice plate so joint can compress 10 mm.
4. Ladder splice plate to be connected with 13 mm ø bolts with double nuts.
5. Inlet pipes shall not protrude into basin.
6. Except for inlets used for junction boxes, basin floors shall have minimum slope of 1:4 from all directions toward outlet pipe, and a wood trowel finish.
7. Galvanizing: See Standard Specifications or Special Provisions. All hardware to be galvanized after fabrication.
8. See Standard Plans D77A and D77B for Grate and Frame Details and Weights of Miscellaneous Iron and Steel.
9. Designation of Type OCPI or OMPI pipe inlets on plans indicates trash racks are to be furnished and installed on all side openings.
10. Chain to be provided when specified.
11. Caulk seal with pliable mixture of sand, portland cement, and emulsified asphalt (Mixture of 1 part portland cement, 3-5 parts sand, and 1½ parts SSI emulsified asphalt.)

NOTE

Galvanize after fabrication. (See Note 7.)

DETAILS OF TRASH RACK FOR PUMPING INSTALLATIONS USE INLET TYPE OCPI or OMPI

STATE OF CALIFORNIA
DEPARTMENT OF TRANSPORTATION

PIPE INLET

NO SCALE

ALL DIMENSIONS ARE IN MILLIMETERS UNLESS OTHERWISE SHOWN

D75

Return to Table of Contents

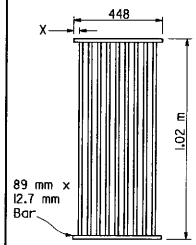

TYPE 450-9

35 mm Clear spacing. Use within the roadbed on highways where bicycles and pedestrians are excluded.

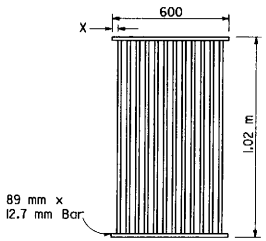

TYPE 600-9

51mm Clear spacing. Use in locations off the roadbed on all types of highways.

TYPE 600-12

35 mm Clear spacing. Use within the roadbed on highways where bicycles and pedestrians are excluded.

RECTANGULAR GRATE DETAILS

(See table below)

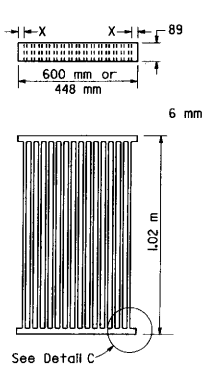

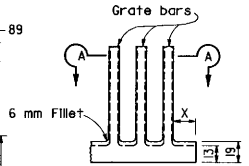

DETAIL C

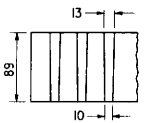

SECTION A-A

ALTERNATIVE CAST NODULAR IRON GRATE OR CAST STEEL GRATE

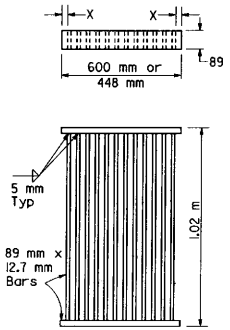

ALTERNATIVE WELDED GRATE

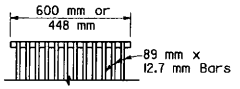

CAST END BLOCK

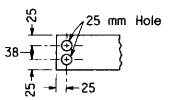

END OF BAR

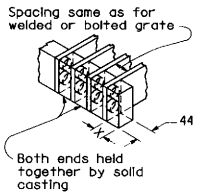

ALTERNATIVE CAST NODULAR IRON OR CAST STEEL END BLOCK GRATE

NOTES

1. Grate type numbers refer to approximate width of grate in millimeters and number of bars, respectively.
2. Contractor has the option of using cast nodular iron, cast steel, welded, bolted, or cast end block grate.
3. See Special Provisions for requirements pertaining to galvanizing or asphalt dipping of grates and frames.
4. Rounded top of bars optional on all grates.
5. Pipe inlets with a grate shall be placed so that bars parallel direction of principle surface flow.
6. Full penetration butt welds may be substituted for the fillet welds on all anchors.
7. Standard square, hexagon, round or equivalent headed anchors may be substituted for the right angle hooks on the anchors shown on this plan.
8. Grate and frame weights are based on welded grates (weights of face angles, steps, protection bars, etc. are not included).

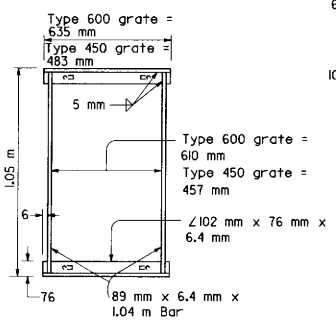

TYPICAL FRAME

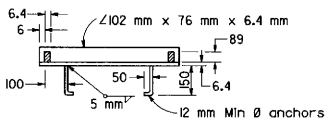

CROSS SECTION

(Thru frame)

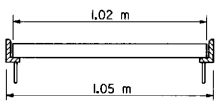

LONGITUDINAL SECTION

(Thru frame and grate)

RECTANGULAR FRAME DETAILS

(For all rectangular grates)

GRATE BAR SPACING TABLE

TYPE	NO. OF BARS	CLEAR BAR SPACING (mm)	X (mm)
450-9	9	35	27
600-9	9	51	40
600-12	12	35	32

INLET TYPE	COVER TYPE	MASS (kg)
OS	PLATE	79
OL-2.1	PLATE	77
OL-3.0	PLATE	77
OL-4.3	PLATE	77
OL-6.4	PLATE	77
OCP	PLATE	51
OCPI	PLATE	51
OCPI	REDWOOD	19
OMP	PLATE	80
OMPI	PLATE	80

INLET TYPE	GRATE TYPE	NO. OF GRATES	MASS (kg)
GDO	600-12	2	288
GOL-2.1	600-12	1	148
GOL-3.0	600-12	1	148
GO,G1,G2,G3,G4(TYPE 600)	600-9	1	119
	600-12	1	148
G4(TYPE 450),G5,G6	450-9	1	113
GT-1	450-9	2	226
GT-2	450-9	2	226
GT-3	600-12	2	296
GT-4	600-12	2	296
TRASH RACK			10

BASIC FOR MISC IRON & STEEL FINAL PAY MASSES FOR DRAINAGE INLETS

(See General Notes, No 8)

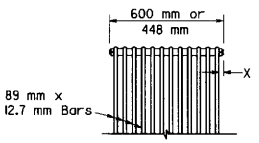

BOLTED END BLOCK

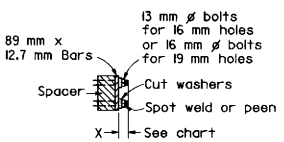

BOLTING DETAIL

ALTERNATIVE BOLTED GRATE

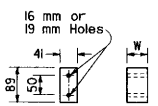

BAR SPACER

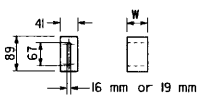

ALTERNATIVE SPACER

35 mm or 50 mm

DIST	COUNTY	ROUTE	KILOMETER POST TOTAL PROJECT	SHEET NO.	TOTAL SHEETS

REGISTERED CIVIL ENGINEER

July 1, 1997

PLANS APPROVAL DATE

REGISTERED PROFESSIONAL ENGINEER Glenn DeCou No. C34547 Exp. 9-30-99 CIVIL STATE OF CALIFORNIA

The State of California or its officers or agents shall not be responsible for the accuracy or completeness of electronic copies of this plan sheet.

STATE OF CALIFORNIA
DEPARTMENT OF TRANSPORTATION

GRATE DETAILS

NO SCALE

ALL DIMENSIONS ARE IN MILLIMETERS UNLESS OTHERWISE SHOWN

D77A

STD. PLAN D77A

Return to Table of Contents

The State of California or its officers or agents shall not be responsible for the accuracy or completeness of electronic copies of this plan sheet.

Metric

DIST	COUNTY	ROUTE	KILOMETER POST TOTAL PROJECT	SHEET NO.	TOTAL SHEETS

REGISTERED CIVIL ENGINEER

July 1, 1997
PLANS APPROVAL DATE

REGISTERED PROFESSIONAL ENGINEER Glenn DeCou No. C34547 Exp. 9-30-99 CIVIL STATE OF CALIFORNIA

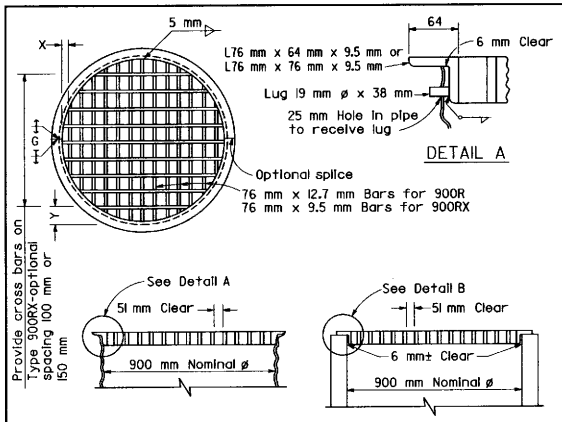

TYPE 900R & 900RX GRATE DETAILS

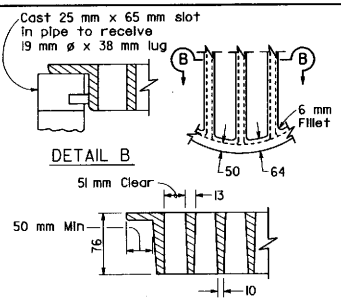

ALTERNATIVE CAST NODULAR IRON GRATE OR CAST STEEL GRATE TYPE 900R & 900RX

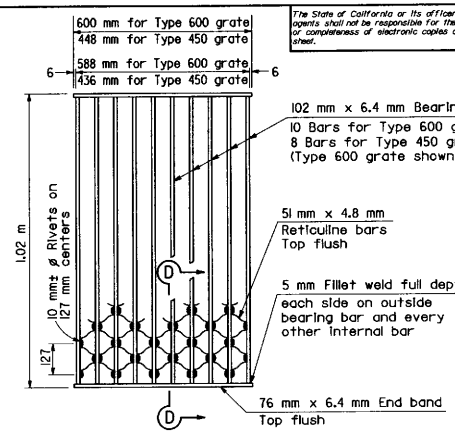

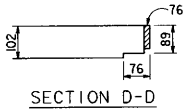

NOTE
Mass of Type 600 grate = 83 kg.
Mass of Type 450 grate = 66 kg.

TYPE 450-8S & 600-10S GRATE
(WELDED STEEL)
RETICULINE TYPE

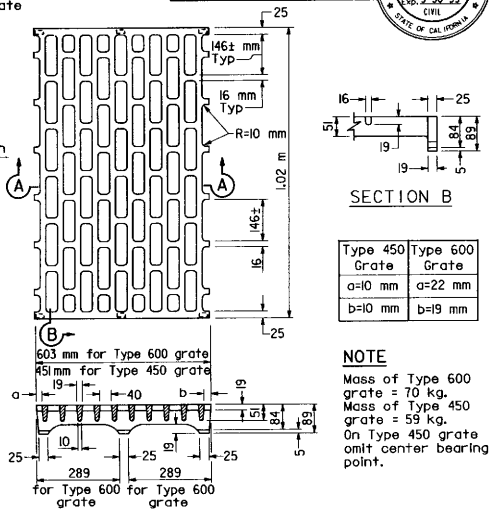

Type 450 Grate	Type 600 Grate
a=10 mm	a=22 mm
b=10 mm	b=19 mm

NOTE
Mass of Type 600 grate = 70 kg.
Mass of Type 450 grate = 59 kg.
On Type 450 grate omit center bearing point.

TYPE 450-8C & 600-10C GRATE
(CAST NODULAR IRON)

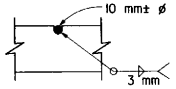

10 mm± ø Cross bars may be fillet welded, resistance welded or electroforged to bearing bars.

CROSS BAR DETAIL TYPE 900RX GRATE (WELDED STEEL)

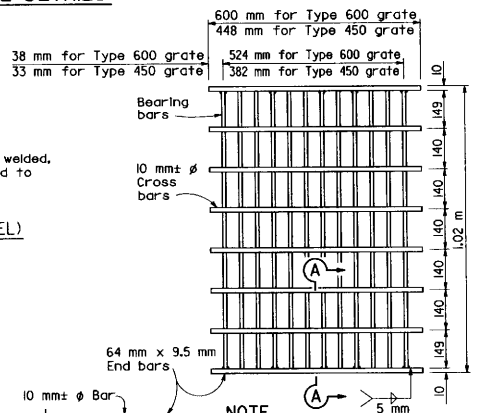

SECTION A-A

NOTE
Bearing bars to be 89 mm x 9.5 mm bars on 48 mm centers.
12 Bars for Type 600 grate - 9 bars for Type 450 grates. (Type 600 grate shown.)
Mass of Type 600 grate = 87 kg.
Mass of Type 450 grate = 66 kg.
10 mm± ø Cross bars may be fillet welded, resistance welded or electroforged to bearing bars.

TYPE 450-9X & 600-12X GRATE
(WELDED STEEL)

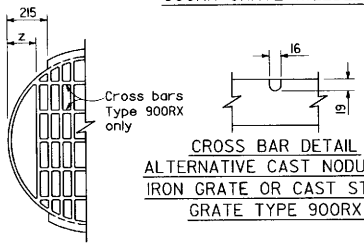

CROSS BAR DETAIL
ALTERNATIVE CAST NODULAR IRON GRATE OR CAST STEEL GRATE TYPE 900RX

MODIFIED
TYPE 900R & 900RX GRATE FOR ODI INLET

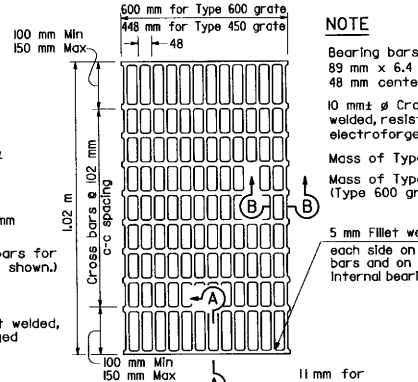

NOTE
Bearing bars to be 89 mm x 6.4 mm bars on 48 mm centers.
10 mm± ø Cross bars may be fillet welded, resistance welded or electroforged to bearing bars.
Mass of Type 600 grate = 64 kg.
Mass of Type 450 grate = 49 kg.
(Type 600 grate shown)

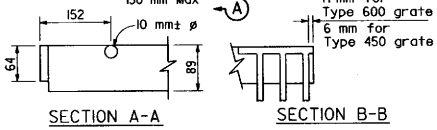

TYPE 450-10 & 600-13 GRATE
(WELDED STEEL)

BASIS FOR MISC IRON & STEEL FINAL PAY MASSES FOR DRAINAGE INLETS

INLET TYPE	GRATE TYPE	NO. GRATES	MASS (kg)
GDO	600-10C	2	177
	600-10S	2	202
	600-13	2	165
GO,GOL,G1,G2, G3,G4 (TYPE 600)	600-10C	1	92
	600-10S	1	104
	600-12X	1	108
	600-13	1	85
G4 (TYPE 450) G5,G6	450-8S	1	85
	450-9X	1	85
	450-10	1	68
GT-1,GT-2	450-8S	2	170
	450-9X	2	170
	450-10	2	135
GT-3,GT-4	600-10C	2	183
	600-10S	2	208
	600-12X	2	217
	600-13	2	171

NOTES
1. When alternative grates are allowed - Final pay based on alternative with the lesser mass.
2. Seal welding at all surfaces not required when grates are galvanized.
3. Use frame shown on Standard Plan D77A.

GRATE BAR SPACING TABLE

TYPE	NO. OF BARS	CLEAR BAR SPACING	X (mm)	Y (mm) 100 mm SPACING	Y (mm) 150 mm SPACING	Z (mm)
900R	13	51 mm	54	-	-	-
900RX (Steel)	15	51 mm	14	95	146	-
900RX (Cast)	13	51 mm	54	95	146	-
900R Mod	12	51 mm	54	-	-	127
900RX Mod (Steel)	13	51 mm	14	95	146	144
900RX Mod (Cast)	12	51 mm	54	95	146	127

INLET TYPE	GRATE TYPE	NO. OF GRATES	MASS (kg)
ODI	900RX (Mod)	1	89
GMP, GCP, GCPI	900RX	1	98
ODI	900R (Mod)	1	100
GMP, GCP, GCPI	900R	1	107

STATE OF CALIFORNIA
DEPARTMENT OF TRANSPORTATION

BICYCLE PROOF GRATE DETAILS

NO SCALE

ALL DIMENSIONS ARE IN MILLIMETERS UNLESS OTHERWISE SHOWN

D77B

Return to Table of Contents

DIST	COUNTY	ROUTE	KILOMETER POST TOTAL PROJECT	SHEET NO.	TOTAL SHEETS

Glenn DeCou
REGISTERED CIVIL ENGINEER

July 1, 1997
PLANS APPROVAL DATE

The State of California or its officers or agents shall not be responsible for the accuracy or completeness of electronic copies of this plan sheet.

REGISTERED PROFESSIONAL ENGINEER
Glenn DeCou
No. C34547
Exp. 9-30-99
CIVIL
STATE OF CALIFORNIA

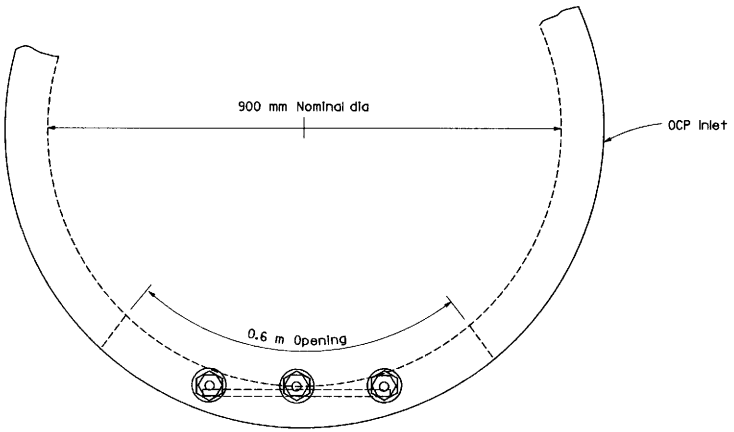

PLAN

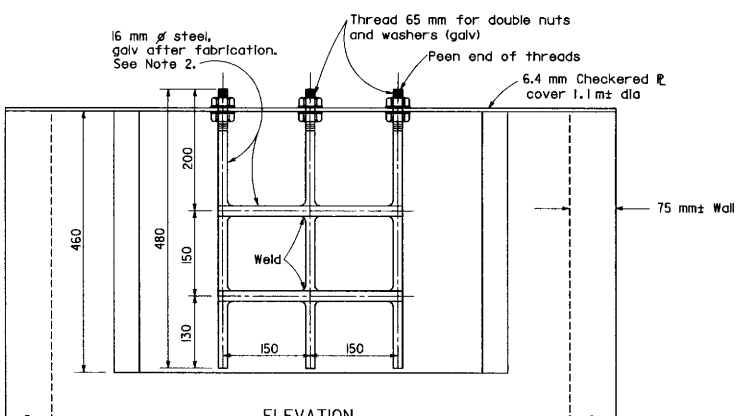

ELEVATION

ALTERNATIVE
TRASH RACK FOR TYPE OCP INLET
Single or double opening

NOTES

1. Alternative methods of securing drop-handles to cover will be acceptable.
2. Galvanizing: See Standard Specifications or Special Provisions.
3. This hinged cover is to be used only on embankment or steep slopes.

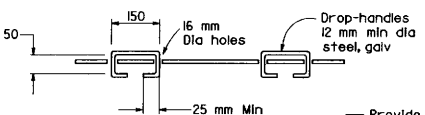

SECTION A-A

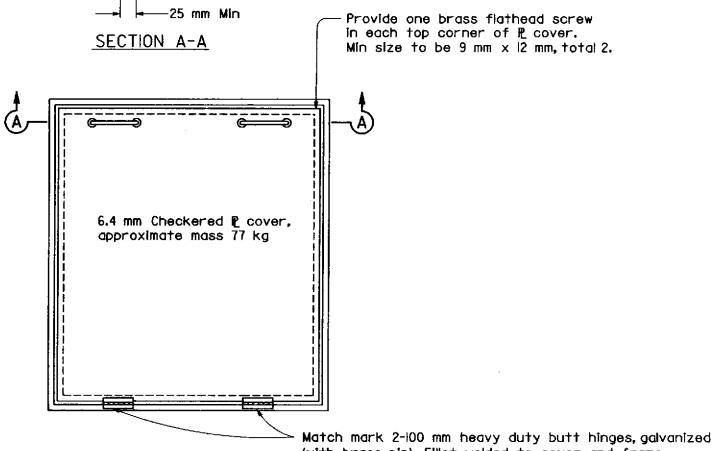

PLAN

HINGED COVER FOR
TYPE OL AND OS INLETS

STATE OF CALIFORNIA
DEPARTMENT OF TRANSPORTATION

ALTERNATIVE HINGED COVER FOR TYPE OL AND OS INLETS AND TRASH RACK FOR TYPE OCP INLET

NO SCALE

ALL DIMENSIONS ARE IN MILLIMETERS UNLESS OTHERWISE SHOWN

D77C

STD. PLAN D77C

Return to Table of Contents

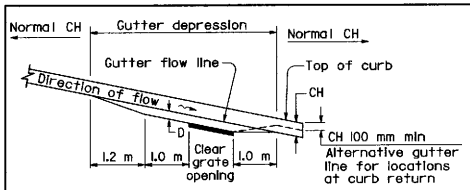

PROFILE

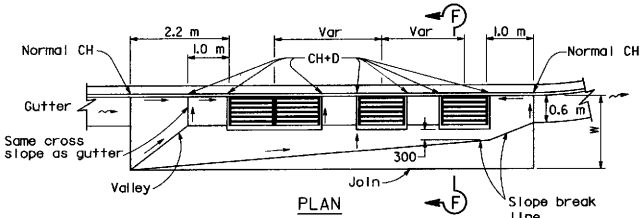

PLAN

GRATE INLET SERIES

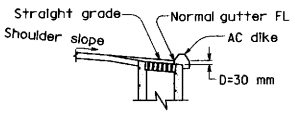

DETAIL OF INLET WITH DIKE

(Single grate shown)

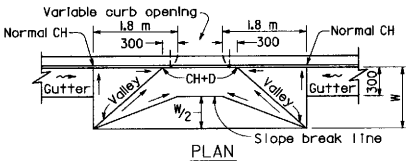

PLAN

TYPE OS AND OL INLETS IN GRADE SAG

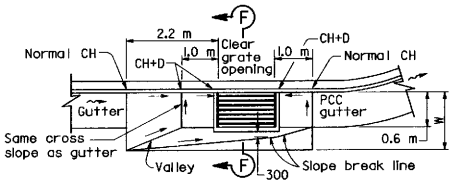

PLAN

TYPE GI THRU G6 INLETS ON GRADE

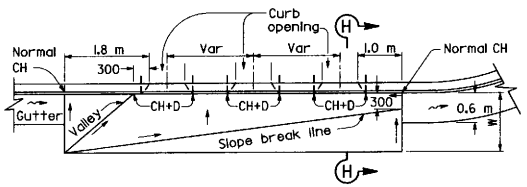

TYPE OS AND OL INLETS IN SERIES ON GRADE

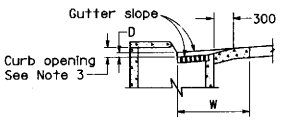

SECTION B-B

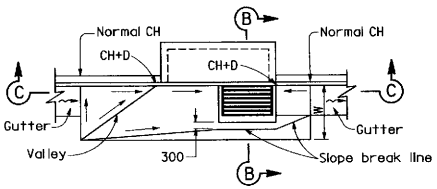

PLAN

TYPE GOL INLET ON GRADE

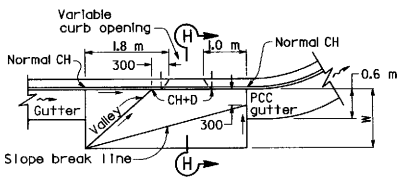

PLAN

TYPE OS AND OL INLETS ON GRADE

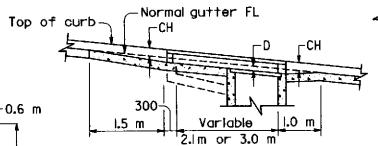

SECTION C-C

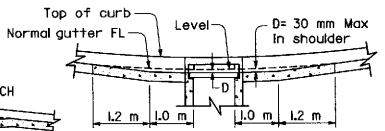

SECTION D-D

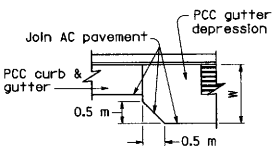

DETAIL OF ASPHALT CONCRETE PAVEMENT

(See Note 4)

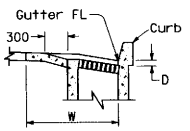

SECTION F-F

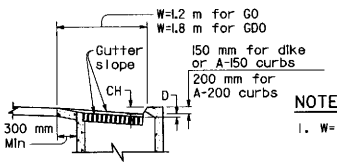

SECTION E-E

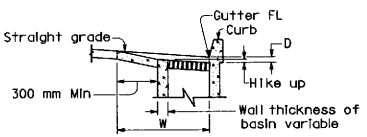

SECTION G-G

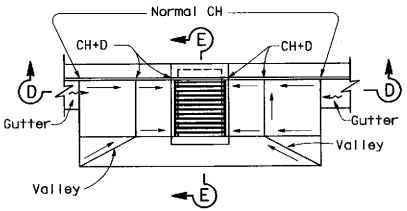

PLAN

TYPE GO AND GDO INLET GRADE SAG

(GDO shown)

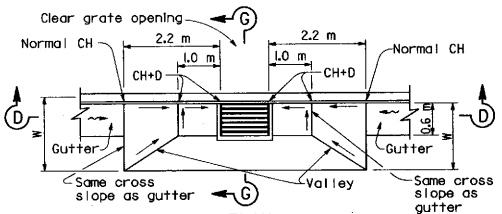

PLAN

TYPE GI THRU G6 GT3 AND GT4 INLETS IN GRADE SAG

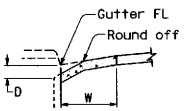

SECTION H-H

NOTES

1. W= Width of depressed apron. Depressed aprons shall be 1.2 m on shoulder and 1.2 m to 1.8 m in city street gutters unless otherwise shown.

   D= Gutter depression. The gutter depression shall be 30 mm for shoulder and 30 mm to 80 mm in city street gutter or locations outside of shoulder unless otherwise shown.

   CH= Curb Height.

   → = Straight grade, downward slope.

   ⇝ = Gutter or shoulders direction of flow.
2. Gutter depressions shall be 200 mm thick.
3. Establish curb opening height at midpoint of grate.
4. Details shown for portland cement concrete pavement. When asphalt concrete pavement is used, corners to be cut off as shown on Detail of Asphalt Concrete Pavement.

STATE OF CALIFORNIA
DEPARTMENT OF TRANSPORTATION

GUTTER DEPRESSIONS

NO SCALE

ALL DIMENSIONS ARE IN MILLIMETERS UNLESS OTHERWISE SHOWN

D78

Caltrans Metric

DIST	COUNTY	ROUTE	KILOMETER POST TOTAL PROJECT	SHEET NO.	TOTAL SHEETS

REGISTERED CIVIL ENGINEER

July 1, 1997
PLANS APPROVAL DATE

Glenn DeCou No. C34547 Exp. 9-30-99 CIVIL STATE OF CALIFORNIA REGISTERED PROFESSIONAL ENGINEER

The State of California or its officers or agents shall not be responsible for the accuracy or completeness of electronic copies of this plan sheet.

STD. PLAN D78

Return to Table of Contents

DIST	COUNTY	ROUTE	KILOMETER POST TOTAL PROJECT	SHEET NO.	TOTAL SHEETS

Caltrans Metric

Paul Cotter
REGISTERED CIVIL ENGINEER

July 1, 1997
PLANS APPROVAL DATE

REGISTERED PROFESSIONAL ENGINEER Paul Cotter No. 34509 Exp. 9-30-99 CIVIL STATE OF CALIFORNIA

The State of California or its officers or agents shall not be responsible for the accuracy or completeness of electronic copies of this plan sheet.

f'c = 42 MPa

		WALL A																	
		MINIMUM COVER TO 3 m MAX COVER									6 m MAX COVER								12 m MAX COVER
ID	t	METHOD 1			METHOD 2			METHOD 3B			METHOD 1			METHOD 2			METHOD 3B		METHOD 3B
mm		Asl	Aso	Ase	Asl	Aso	Ase	Asl	Aso	Ase	Asl	Aso	Ase	Asl	Aso	Ase	Asl	Aso	Asl	Aso
600	63	360	–	–	280	–	–	210	–	–	470	–	–	300	–	–	210	–	–	420	–
750	69	400	–	–	380	–	–	320	–	–	660	–	640	420	–	–	300	–	–	570	380
900	75	450	280	490	440	280	440	360	250	360	780	400	800	530	340	550	340	210	340	700	470
1050	88	530	320	590	490	320	490	380	280	380	850	440	950	570	360	590	360	230	380	740	510
1200	100	660	380	680	510	340	530	400	280	400	950	490	1080	640	380	640	400	250	400	800	550
1350	113	680	400	700	530	360	530	400	300	420	1040	530	1230	680	420	700	440	300	440	870	590
1500	125	700	400	720	550	360	550	400	300	420	1140	570	1380	740	470	760	490	320	490	950	640
1650	138	720	420	740	550	360	570	420	300	420	1250	610	1500	800	510	830	530	340	530	1040	680
1800	150	740	420	760	550	360	570	400	300	420	1330	660	1630	870	550	890	550	360	570	1120	720
1950	163	760	420	780	570	380	590	420	300	440	1460	700	1910	930	590	950	590	400	610	1210	780
2100	175	800	440	830	590	380	610	420	300	550	1570	760	–	990	640	1040	660	420	680	1290	830
2250	188	850	470	870	640	400	660	440	300	610	–	–	–	1080	680	1140	700	470	720	1400	890
2400	200	910	490	930	660	420	700	440	300	700	–	–	–	1140	720	1290	740	490	760	1500	950
2550	213	970	530	990	720	470	800	490	320	800	–	–	–	1230	760	1480	800	530	830	1590	990
2700	225	1040	570	1060	760	490	890	530	340	890	–	–	–	1310	830	1690	850	550	890	1690	1060

f'c = 42 MPa / f'c = 49 MPa

	WALL AA	
	24 m MAX COVER	
ID	t	METHOD 3C	
mm		Asl	Aso
600	144	280	150
750	150	400	150
900	163	510	150
1050	175	610	210
1200	188	720	280
1350	200	850	360
1500	213	990	440
1650	225	1100	530
1800	238	1210	590
1950	250	1330	680

f'c = 35 MPa

		WALL B																	
		MINIMUM COVER TO 3 m MAX COVER									6 m MAX COVER								12 m MAX COVER
ID	t	METHOD 1			METHOD 2			METHOD 3B			METHOD 1			METHOD 2			METHOD 3B		METHOD 3B
mm		Asl	Aso	Ase	Asl	Aso	Ase	Asl	Aso	Ase	Asl	Aso	Ase	Asl	Aso	Ase	Asl	Aso	Asl	Aso
600	75	250	–	–	210	–	–	190	–	–	380	–	–	250	–	–	190	–	–	380	–
750	88	400	–	320	300	–	250	250	–	210	530	–	470	340	–	280	230	–	210	510	–
900	100	380	190	380	280	170	300	230	150	230	490	230	590	340	190	340	230	150	230	470	280
1050	113	440	230	440	320	190	340	280	170	280	570	300	740	380	210	400	280	170	280	530	320
1200	125	510	280	510	380	230	380	300	190	320	660	340	910	440	250	470	320	190	320	610	380
1350	138	550	300	550	400	250	400	320	210	320	760	380	1060	510	300	510	360	210	380	700	440
1500	150	570	320	590	420	280	420	340	210	340	850	440	1270	570	340	570	400	230	420	780	490
1650	163	610	320	640	440	300	440	360	230	380	930	490	1550	640	380	640	440	300	440	870	550
1800	175	640	340	660	440	300	470	360	230	400	1100	550	1840	700	420	720	530	320	530	950	610
1950	188	660	360	680	470	320	510	380	250	470	1310	590	2140	760	470	780	550	340	570	1040	680
2100	200	700	380	720	490	320	550	380	250	550	1480	640	–	830	510	870	590	360	610	1120	720
2250	213	760	400	780	530	340	640	400	250	640	–	–	–	890	550	1040	640	380	660	1190	760
2400	225	830	420	850	570	340	720	420	250	720	–	–	–	950	590	1160	680	420	720	1250	800
2550	238	890	470	950	610	380	800	470	300	800	–	–	–	1040	660	1350	740	470	800	1350	870
2700	250	950	510	1140	660	400	910	510	320	910	–	–	–	1100	680	1500	800	510	910	1420	970

f'c = 35 MPa / f'c = f'c = 42 MPa / f'c = f'c = 49 MPa

	WALL BB	
	24 m MAX COVER	
ID	t	METHOD 3C	
mm		Asl	Aso
600	163	230	150
750	175	340	150
900	188	440	150
1050	200	530	150
1200	213	660	190
1350	225	780	280
1500	238	870	340
1650	250	1140	420
1800	265	1230	510
1950	280	1310	570
2100	290	1330	610
2250	305	1440	700

f'c = 42 MPa

		WALL X																	
		MIN COVER TO 3 m MAX COVER						3.1m TO 6 m MAX COVER						6.1m TO 9 m MAX COVER					
ID	t	METHOD 3B			METHOD 3C			METHOD 3B			METHOD 3C			METHOD 3B			METHOD 3C		
mm		Asl	Aso	Ase	Asl	Aso	Ase	Asl	Aso	Ase	Asl	Aso	Ase	Asl	Aso		Asl	Aso	
600	47	280	–	–	250	–	–	250	–	–	210	–	–	380	–		320	–	
750	53	380	–	–	360	–	–	320	–	–	250	–	–	490	–		400	–	
900	59	400	320	400	380	280	380	360	–	300	300	–	250	440	320		450	–	
1050	63	610	490	610	570	440	570	420	–	420	340	–	340	660	490		510	380	
1200	69	660	510	660	590	470	610	530	–	490	420	–	380	740	550		590	440	
1350	75	660	530	660	610	490	610	590	–	510	490	–	400	760	550		590	440	
1500	88	610	490	640	570	440	590	680	–	530	550	–	420	780	570		610	470	
1650	94	610	490	610	570	440	590	590	420	590	490	360	490	890	640		700	530	
1800	105	570	440	570	530	400	550	590	420	590	490	340	490	870	610		700	510	
1950	119	530	400	550	510	380	510	590	420	610	490	360	510	870	610		700	510	
2100	132	530	400	570	490	360	530	610	440	640	510	360	530	890	640		720	510	
2250	144	510	380	590	470	340	590	700	490	720	590	400	590	990	720		830	590	
2400	150	510	380	680	490	340	680	720	510	740	590	420	680	990	720		830	590	
2550	163	510	380	760	530	340	760	780	550	800	660	470	760	1120	780		910	660	
2700	175	550	380	870	490	340	870	850	590	890	720	510	870	1250	850		990	720	

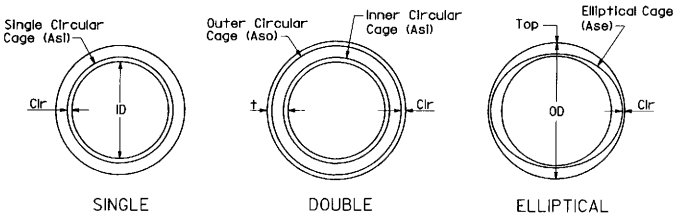

CAGE REINFORCEMENT

t = Pipe barrel wall thickness, mm

Asl = Inner cage reinforcement, or single circular cage reinforcement, square mm/m

Aso = Outer cage reinforcement, square mm/m

Ase = Elliptical single cage reinforcement, square mm/m

ID = Inside Diameter, mm

OD = Outside Diameter, mm

Clr = Design clearance, mm (see Note 6)

DESIGN NOTES

Design: Bridge Design Specifications (1983 AASHTO with Interims and revisions by Caltrans)

A. Earth Loading:
Earth Densities - Vertical: 2240 kg/m^3
Horizontal: Varies, see design lateral pressure chart (Circular Pipe only)

B. Unit Stresses: (Used in Design Tables)
fy = 450 MPa
f'c = See Tables

C. The RCP as shown on this sheet is not intended to be used in a corrosive environment. A special design may be required.

CONSTRUCTION NOTES

1. For details of the method of excavation, backfill and bedding (Method 1, Method 2, etc.), see Standard Plan A62D.
2. The tables for minimum allowable classes and D-loads of RCP on Standard Plan A62D shall not apply to direct design RCP.
3. Notes 3, 9 and 10 on Standard Plan A62D shall apply to direct design RCP.
4. Throughout the length of any given culvert, the direct design selected by the Contractor shall be the same, including the method of excavation, backfill and bedding.
5. The embankment height prior to excavation specified in note 5 of the Standard Plan A62D shall apply to the direct design RCP installation when Method 2, 3A or 3B are used.
6. For single circular cage reinforcement, minimum clearance shall be 40% of the wall thickness (t). For elliptical and double circular cage reinforcement where the wall thickness (t) is less than 65 mm, the minimum clearance (Clr) for reinforcement shall be 20 mm, and where the wall thickness (t) is 65 mm or more the minimum clearance (Clr) for reinforcement shall be 25 mm.
7. Minimum cover measured at the edge of pavement shall be 600 mm to top of AC pavement and 300 mm to top of rigid pavement.

STATE OF CALIFORNIA
DEPARTMENT OF TRANSPORTATION

PRECAST REINFORCED CONCRETE PIPE DIRECT DESIGN METHOD

NO SCALE

ALL DIMENSIONS ARE IN MILLIMETERS UNLESS OTHERWISE SHOWN

D79

STD. PLAN D79

Return to Table of Contents

SPAN (m)	1.2						1.5								1.8								2.1								2.4									
HEIGHT (m)	0.6		0.9		1.2		0.6		0.9		1.2		1.5		0.9		1.2		1.5		1.8		0.9		1.2		1.5		1.8		1.2		1.5		1.8		2.1		2.4	
Maximum Earth Cover (m)	3.0	6.0	3.0	6.0	3.0	6.0	3.0	6.0	3.0	6.0	3.0	6.0	3.0	6.0	3.0	6.0	3.0	6.0	3.0	6.0	3.0	6.0	3.0	6.0	3.0	6.0	3.0	6.0	3.0	6.0	3.0	6.0	3.0	6.0	3.0	6.0	3.0	6.0	3.0	6.0
Conc: Roof T_1 (mm)	180	180	180	180	180	180	190	190	190	190	190	190	190	190	205	205	205	205	205	205	205	205	205	230	205	230	205	230	205	230	215	240	215	240	215	255	215	255	215	255
Conc: Walls T_2 (mm)	150	150	150	150	150	165	150	150	150	150	150	180	165	190	150	150	150	180	165	190	180	215	150	150	150	180	165	190	180	215	205	240	150	180	165	190	180	215	205	240
Conc: Invert T_3 (mm)	150	150	150	150	150	165	165	180	165	180	165	180	165	180	180	205	180	205	180	205	180	205	205	230	205	230	205	230	205	230	205	230	205	240	205	255	205	255	205	255
Reinf: Spacing (mm)	175	175	175	175	175	175	215	150	215	140	215	140	215	140	190	125	190	125	190	125	190	115	165	125	165	115	165	140	165	140	165	140	150	125	150	125	150	115	150	125
Reinf: "a" Size Bar #	19	19	19	19	19	19	22	19	22	19	22	19	22	19	22	19	22	19	22	19	22	19	22	19	22	19	22	22	22	22	22	22	22	22	22	22	22	22	22	22
Reinf: "e" Size Bar #	13	13	13	16	16	19	13	13	13	13	16	16	19	19	13	13	16	16	19	19	22	19	13	13	16	16	19	19	19	19	19	19	16	16	16	19	19	19	22	22
Quantities: Concrete m^3/m	0.69	0.69	0.78	0.78	0.87	0.94	0.83	0.85	0.93	0.95	1.02	1.11	1.16	1.27	1.09	1.14	1.18	1.32	1.32	1.48	1.48	1.70	1.27	1.38	1.36	1.56	1.50	1.72	1.68	1.95	1.92	2.21	1.52	1.77	1.66	1.96	1.81	2.24	2.05	2.50	2.24	2.80
Quantities: Reinforcement kg/m	71	71	74	82	86	100	86	89	86	101	100	121	122	156	104	121	122	143	144	179	185	220	140	140	156	176	180	219	193	263	238	286	183	225	195	254	204	295	238	320	286	375

SPAN (m)	3.0														3.7												4.3															
HEIGHT (m)	1.5		1.8		2.1		2.4		2.7		3.0		1.8		2.1		2.4		2.7		3.0		3.4		3.7		2.1		2.4		2.7		3.0		3.4		3.7		4.0		4.3	
Maximum Earth Cover (m)	3.0	6.0	3.0	6.0	3.0	6.0	3.0	6.0	3.0	6.0	3.0	6.0	3.0	6.0	3.0	6.0	3.0	6.0	3.0	6.0	3.0	6.0	3.0	6.0	3.0	6.0	3.0	6.0	3.0	6.0	3.0	6.0	3.0	6.0	3.0	6.0	3.0	6.0	3.0	6.0	3.0	6.0
Conc: Roof T_1 (mm)	205	270	205	270	205	270	205	270	205	270	215	280	215	305	215	305	215	305	215	305	215	305	240	305	240	305	240	355	240	355	240	355	240	355	255	355	255	355	270	355	280	355
Conc: Walls T_2 (mm)	205	205	205	230	205	230	205	255	215	290	240	320	205	255	215	270	215	270	215	290	230	320	270	345	290	380	240	280	240	290	240	290	255	320	270	355	290	380	320	420	345	445
Conc: Invert T_3 (mm)	205	280	205	280	205	280	205	280	205	280	215	280	215	320	230	320	230	320	230	320	230	320	240	330	255	330	255	370	255	370	270	370	270	380	280	380	290	380	290	380	290	380
Reinf: Spacing (mm)	325	300	300	300	275	275	250	275	275	250	275	250	225	250	225	250	225	250	200	250	200	250	250	225	225	200	250	225	250	225	250	200	250	200	250	200	200	250	250	250	250	225
Reinf: •• "a" Size Bar #	19	22	19	22	19	22	19	22	19	19	19	19	19	22	19	22	19	22	19	22	19	22	19	19	19	19	22	22	22	22	22	22	22	22	22	22	19	22	19	22	19	22
Reinf: "b" Size Bar #	19	22	19	22	19	22	19	22	19	19	22	22	19	22	19	22	19	22	19	22	19	22	22	22	19	22	19	22	22	22	22	22	22	22	22	22	19	25	22	25	22	25
Reinf: "b" Dimension "B" (mm)	900	900	900	925	900	1150	900	1150	900	1150	900	1150	950	975	1150	1150	1150	1150	1100	1150	1100	1325	1100	1325	1325	1325	850	1275	1025	1325	1025	1375	1025	1375	1075	1375	1075	1375	1075	1375	1450	1850
Reinf: "b" Dimension "B_W" (mm)	1475	1525	1475	1525	1475	1525	1475	1525	1475	1525	1400	1400	1850	1800	1900	2025	1900	2025	1500	1500	1500	1500	1500	1500	1325	1325	1975	2150	2150	2550	2150	2550	1850	1850	1850	1850	1850	1850	1525	1850	1375	1850
Reinf: "c" Size Bar #	19	22	19	22	19	22	19	22	22	22	22	22	19	22	19	22	19	22	19	22	19	22	22	22	22	22	22	22	22	22	22	22	22	22	22	22	22	25	25	25	25	25
Reinf: "c" Dimension "C" (mm)	1025	1025	2250	1425	2325	1425	2500	1425	2325	1425	2325	1425	1325	1100	2475	1700	2475	1700	2475	1700	2475	1700	2475	1700	2475	1700	1225	1275	2075	2075	1800	1800	1850	1950	2725	1950	2725	1950	2725	1950	2725	1950
Reinf: • "e" Size Bar #	13	13	13	13	13	13	13	13	13	13	16	16	13	13	13	13	13	13	13	13	13	13	16	16	16	16	13	13	13	13	13	13	13	13	13	13	13	16	19	19	19	19
Quantities: Concrete m^3/m	2.01	2.50	2.14	2.74	2.26	2.88	2.38	3.17	2.58	3.50	2.98	3.93	2.49	3.50	2.72	3.73	2.81	3.89	3.00	4.22	3.21	4.63	3.78	5.04	4.22	5.56	3.36	4.73	3.51	4.93	3.67	5.10	3.89	5.45	4.26	5.95	4.64	6.46	5.17	7.04	5.72	7.55
Quantities: Reinforcement kg/m	284	397	347	424	387	484	446	504	467	487	536	555	439	539	525	609	543	625	598	615	618	631	655	701	696	795	557	701	668	777	663	874	668	863	732	887	799	900	839	943	899	1130

• See Note 5
•• See Note 6

"d" bars, for earth covers up to and including 3.0 m								
Span (meters)	1.2	1.5	1.8	2.1	2.4	3.0	3.7	4.3
Number	7	8	9	10	11	12	15	20

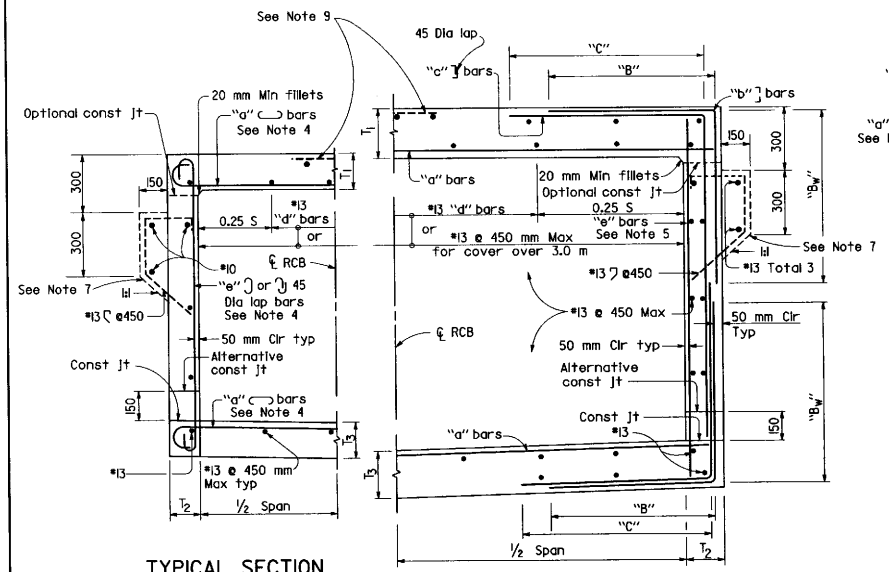

TYPICAL SECTION
SPANS 1.2 m THRU 2.4 m

TYPICAL SECTION
SPANS 3.0 m THRU 4.3 m

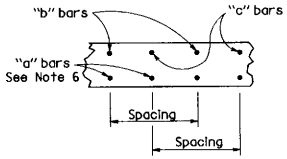

ROOF SECTION
SPANS 3.0 m THRU 4.3 m
INVERT SIMILAR

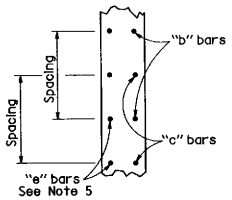

WALL SECTION
SPANS 3.0 m THRU 4.3 m

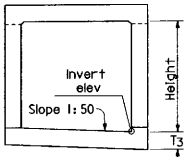

SLOPED INVERT

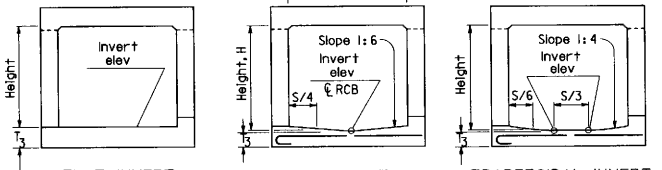

FLAT INVERT
V INVERT
TRAPEZOIDAL INVERT

ALTERNATIVE INVERTS

NOTES

1. For boxes with span or height less than any of those shown in table, use next greater size box concrete dimensions and reinforcement. Make necessary changes in bar lengths and quantities.
2. Quantities are approximate and for design purposes only.
3. For boxes with span or height or cover greater than those shown in tables, a special design is required.
4. It is permissable to eliminate the 180° hooks on every other bar.
5. "e" bars are at half spacing (spans 3 m - 4.3 m only).
6. "a" bars are at half spacing (spans 3 m - 4.3 m only).
7. Provide paving notch when top is exposed and when pavement is portland cement concrete, and adjust quantities.
8. For design and details not shown, see Standard Plan D82.
9. For exposed top, provide #13 @ 450 mm each way (600 mm lap "c" bars of full span and adjust).

STATE OF CALIFORNIA
DEPARTMENT OF TRANSPORTATION

CAST-IN-PLACE REINFORCED CONCRETE SINGLE BOX CULVERT

NO SCALE

ALL DIMENSIONS ARE IN MILLIMETERS UNLESS OTHERWISE SHOWN

D80

STD. PLAN D80

DIST	COUNTY	ROUTE	KILOMETER POST TOTAL PROJECT	SHEET NO.	TOTAL SHEETS

Caltrans Metric

Paul Cotter
REGISTERED CIVIL ENGINEER

July 1, 1997
PLANS APPROVAL DATE

REGISTERED PROFESSIONAL ENGINEER Paul Cotter No. 34509 Exp. 9-30-99 CIVIL STATE OF CALIFORNIA

The State of California or its officers or agents shall not be responsible for the accuracy or completeness of electronic copies of this plan sheet.

Return to Table of Contents

SPAN (m)	1.2						1.5							
HEIGHT (m)	0.6		0.9		1.2		0.6		0.9		1.2		1.5	
Maximum Earth Cover (m)	3	6	3	6	3	6	3	6	3	6	3	6	3	6
Conc — Roof T_1 (mm)	180	180	180	180	180	180	180	190	180	190	180	190	180	190
Conc — Exterior Walls T_2 (mm)	150	150	150	150	150	180	150	150	150	150	150	180	165	190
Conc — Invert T_3 (mm)	180	180	180	180	180	180	180	205	180	205	180	205	180	205
Reinf — Spacing (mm)	400	375	400	375	400	375	290	350	290	350	290	350	290	380
Reinf — "g" Size Bar #	13	22	13	22	13	22	13	22	13	22	13	22	13	22
Reinf — "f" Size Bar #	16	16	16	16	16	16	16	16	16	16	16	16	16	16
Reinf — "a" Size Bar #	19	13	19	13	19	13	19	13	19	13	19	13	19	13
Reinf — * "e" Size Bar #	13	13	13	16	16	19	13	13	13	16	16	19	16	22
Quantity — Concrete (m^3/m)	1.30	1.30	1.44	1.44	1.58	1.65	1.51	1.65	1.65	1.79	1.79	2.00	1.98	2.21
Quantity — Reinforcement (kg/m)	116	132	125	141	138	167	177	167	182	180	199	204	216	241

SPAN (m)	1.8								2.1									
HEIGHT (m)	0.9		1.2		1.5		1.8		0.9		1.2		1.5		1.8		2.1	
Maximum Earth Cover (m)	3	6	3	6	3	6	3	6	3	6	3	6	3	6	3	6	3	6
Conc — Roof T_1 (mm)	180	230	180	230	180	230	180	230	190	255	190	255	190	255	190	255	205	255
Conc — Exterior Walls T_2 (mm)	150	150	150	180	165	205	180	215	150	150	150	180	165	190	180	230	205	240
Conc — Invert T_3 (mm)	180	230	180	230	180	230	180	230	190	270	190	270	190	270	190	270	190	270
Reinf — Spacing (mm)	290	300	290	300	290	300	290	300	275	265	275	265	275	265	275	265	275	265
Reinf — "g" Size Bar #	19	22	19	22	19	22	19	22	19	22	19	22	19	22	19	22	19	22
Reinf — "f" Size Bar #	16	16	16	16	16	16	16	16	19	16	19	16	19	16	19	16	19	16
Reinf — "a" Size Bar #	22	13	22	13	22	13	22	13	19	13	19	13	19	13	19	13	19	13
Reinf — * "e" Size Bar #	13	16	13	19	16	19	19	22	13	16	16	16	16	19	19	22	19	22
Quantity — Concrete (m^3/m)	1.87	2.29	2.00	2.51	2.19	2.76	2.40	3.00	2.20	2.86	2.34	3.10	2.53	3.30	2.73	3.63	3.00	3.88
Quantity — Reinforcement (kg/m)	277	241	286	266	307	283	338	315	308	293	327	310	338	339	375	390	387	411

SPAN (m)	2.4									
HEIGHT (m)	1.2		1.5		1.8		2.1		2.4	
Maximum Earth Cover (m)	3	6	3	6	3	6	3	6	3	6
Conc — Roof T_1 (mm)	205	280	205	280	205	280	205	280	205	280
Conc — Exterior Walls T_2 (mm)	150	190	165	205	180	230	205	255	215	280
Conc — Invert T_3 (mm)	205	290	205	290	205	290	205	290	205	290
Reinf — Spacing (mm)	225	250	225	250	225	250	225	250	225	250
Reinf — "g" Size Bar #	22	22	22	22	22	22	22	22	22	22
Reinf — "f" Size Bar #	16	16	16	16	16	16	16	16	16	16
Reinf — "a" Size Bar #	19	13	19	13	19	13	19	13	19	13
Reinf — * "e" Size Bar #	13	16	16	19	19	19	19	22	19	22
Quantity — Concrete (m^3/m)	2.71	3.73	2.90	3.94	3.10	4.23	3.38	4.54	3.62	4.89
Quantity — Reinforcement (kg/m)	421	353	449	396	506	415	521	464	536	485

SPAN (m)	3.0											
HEIGHT (m)	1.5		1.8		2.1		2.4		2.7		3.0	
Maximum Earth Cover (m)	3	6	3	6	3	6	3	6	3	6	3	6
Conc — Roof T_1 (mm)	230	320	230	320	230	320	230	320	240	320	240	320
Conc — Exterior Walls T_2 (mm)	205	205	205	215	205	240	205	270	215	290	240	320
Conc — Invert T_3 (mm)	230	320	230	320	230	320	230	320	230	320	230	320
Reinf — Spacing (mm)	275	190	265	190	250	200	250	200	265	200	265	215
Reinf — "g" Size Bar #	22	22	22	22	22	22	22	22	22	22	22	22
Reinf — "f" Size Bar #	22	16	19	16	19	16	19	16	19	16	19	16
Reinf — "a" Size Bar #	13	13	13	13	13	13	13	13	13	13	13	13
Reinf — "b" Size Bar #	16	16	13	16	16	16	19	16	19	19	19	19
Reinf — "b" Dim "B" (mm)	1550	800	625	850	700	850	800	950	800	950	800	950
Reinf — "b" Dim "Bw" (mm)	1225	1500	1225	1500	1225	1500	1225	1500	1225	1500	1225	1500
Reinf — "c" Size Bar #	16	16	19	19	19	19	19	19	22	19	22	19
Reinf — "c" Dim "C" (mm)	950	850	1150	1000	1375	1300	1675	1375	1850	1450	1850	1450
Reinf — * "e" Size Bar #	13	13	13	13	13	13	13	13	13	13	16	16
Quantity — Concrete m^3/m	3.97	5.17	4.15	5.41	4.34	5.74	4.52	6.09	4.88	6.50	5.23	6.92
Quantity — Reinforcement kg/m	551	676	567	735	622	735	684	759	723	818	771	845

SPAN (m)	3.7													
HEIGHT (m)	1.8		2.1		2.4		2.7		3.0		3.4		3.7	
Maximum Earth Cover (m)	3	6	3	6	3	6	3	6	3	6	3	6	3	6
Conc — Roof T_1 (mm)	255	370	255	370	255	370	255	370	255	370	255	370	255	370
Conc — Exterior Walls T_2 (mm)	205	215	205	230	215	270	230	290	240	320	255	355	280	380
Conc — Invert T_3 (mm)	255	380	255	380	255	380	255	380	255	380	255	380	255	380
Reinf — Spacing (mm)	225	200	225	200	200	190	200	190	215	190	215	200	215	200
Reinf — "g" Size Bar #	22	22	22	22	22	22	22	22	22	22	22	22	22	22
Reinf — "f" Size Bar #	22	22	22	22	19	19	19	19	19	19	19	19	19	19
Reinf — "a" Size Bar #	13	13	13	13	13	13	13	13	13	13	13	13	13	13
Reinf — "b" Size Bar #	16	16	16	19	16	19	16	19	19	19	16	19	19	19
Reinf — "b" Dim "B" (mm)	800	950	925	975	1075	975	1075	1025	1150	1025	1150	1025	1150	1025
Reinf — "b" Dim "Bw" (mm)	1250	975	1250	1025	1250	1025	1250	1100	1150	1100	1150	1100	1100	1100
Reinf — "c" Size Bar #	19	19	19	19	19	19	19	19	19	19	22	22	22	22
Reinf — "c" Dim "C" (mm)	1175	1100	1375	1325	1700	1525	2000	1575	2200	1625	2275	1700	2275	1700
Reinf — * "e" Size Bar #	13	13	13	13	13	13	13	13	13	13	16	16	16	16
Quantity — Concrete m^3/m	5.11	7.09	5.30	7.35	5.56	7.79	5.82	8.18	6.12	8.61	6.42	9.18	6.85	9.66
Quantity — Reinforcement kg/m	808	899	838	961	892	987	914	1024	933	1028	1043	1115	1091	1137

SPAN (m)	4.3															
HEIGHT (m)	2.1		2.4		2.7		3.0		3.4		3.7		4.0		4.3	
Maximum Earth Cover (m)	3	6	3	6	3	6	3	6	3	6	3	6	3	6	3	6
Conc — Roof T_1 (mm)	290	420	290	420	290	420	290	420	290	420	290	420	290	420	290	420
Conc — Exterior Walls T_2 (mm)	215	240	215	270	230	290	240	320	270	355	290	380	320	420	330	445
Conc — Invert T_3 (mm)	290	430	290	430	290	430	290	430	290	430	290	430	290	430	290	430
Reinf — Spacing (mm)	215	200	215	200	215	200	215	200	215	200	215	200	225	200	225	200
Reinf — "g" Size Bar #	25	25	25	25	25	25	25	25	25	25	25	25	25	25	25	25
Reinf — "f" Size Bar #	19	19	19	19	19	19	19	19	19	19	19	19	19	19	19	19
Reinf — "a" Size Bar #	13	13	13	13	13	13	13	13	13	13	13	13	13	13	13	13
Reinf — "b" Size Bar #	16	19	19	19	16	19	19	19	19	19	19	22	22	22	22	22
Reinf — "b" Dim "B" (mm)	800	800	1000	1000	1225	1225	1225	1225	1400	1325	1400	1500	1600	1500	1600	1500
Reinf — "b" Dim "Bw" (mm)	1525	1150	1525	1375	1525	1525	1525	1525	1450	1675	1450	1875	1575	1875	1575	1875
Reinf — "c" Size Bar #	19	19	19	22	22	22	22	22	22	22	22	22	22	22	25	25
Reinf — "c" Dim "C" (mm)	1300	1200	1675	1575	2350	1725	2575	1950	2700	2000	2750	2075	2825	2075	2825	2075
Reinf — * "e" Size Bar #	13	13	13	13	13	13	13	13	13	13	16	16	16	16	19	19
Quantity — Concrete m^3/m	6.67	9.26	6.87	9.66	7.14	10.0	7.43	10.5	7.82	11.1	8.25	11.5	8.74	12.2	9.11	12.7
Quantity — Reinforcement kg/m	985	1056	1064	1165	1125	1220	1201	1259	1240	1299	1311	1426	1315	1455	1491	1652

* See Note 5

"d" bars, for earth covers up to and including 3 m								
Span (meters)	1.2	1.5	1.8	2.1	2.4	3.0	3.7	4.3
Number/Cell	5	6	8	10	13	14	16	19

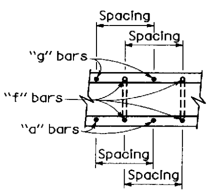

ROOF SECTION
SPANS 1.2 m THRU 2.4 m
INVERT SIMILAR

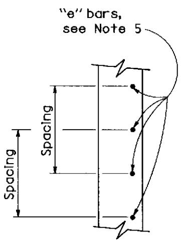

EXTERIOR WALL SECTION
SPANS 1.2 m THRU 2.4 m

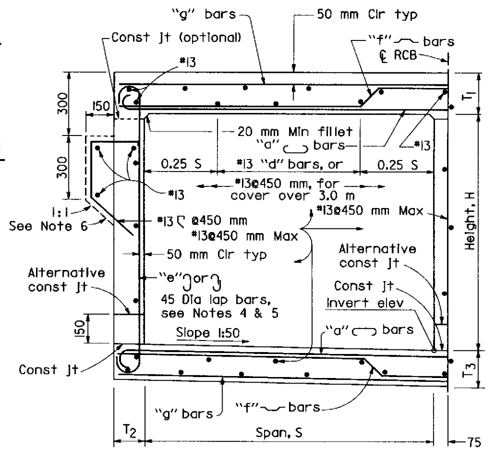

TYPICAL SECTION
SPANS 1.2 m THRU 2.4 m

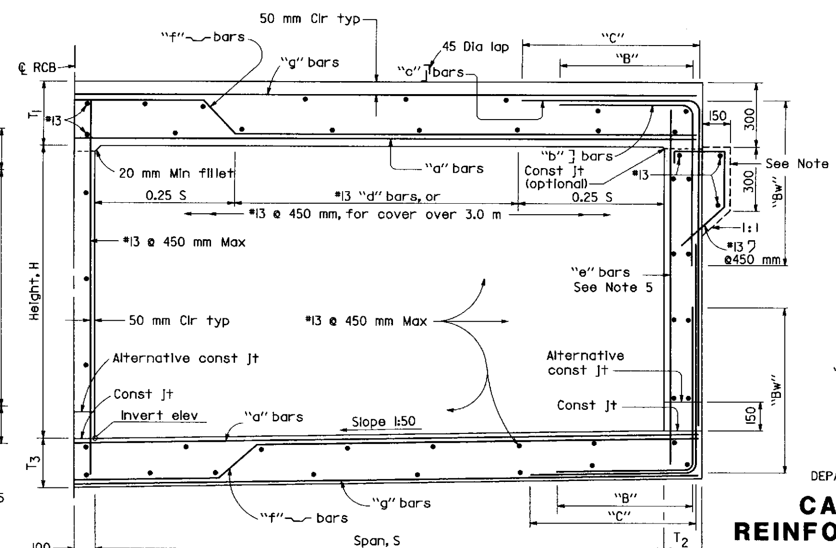

TYPICAL SECTION
SPANS 3.0 m THRU 4.3 m

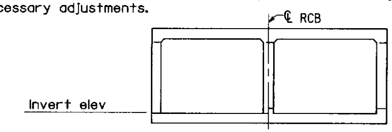

FLAT INVERT ALTERNATIVE

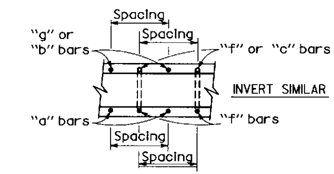

ROOF SECTION
SPANS 3.0 m THRU 4.3 m

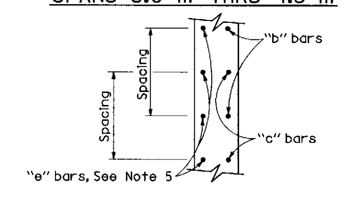

EXTERIOR WALL SECTION
SPANS 3.0 m THRU 4.3 m

NOTES

1. For boxes with span or height less than any of those shown in table, use next greater size box concrete dimensions and reinforcement. Make necessary changes in bar lengths and quantities.
2. For boxes with span or height or cover greater than those shown in tables, a special design is required.
3. Quantities are approximate and for design purposes only.
4. It is permissable to eliminate the 180° hooks on every other "e" bar.
5. "e" bars are at half spacing.
6. Provide paving notch when top is exposed and when pavement is portland cement concrete, and adjust quantities.
7. For design and details not shown, see Standard Plan D82.
8. This plan sheet may be used for multiple cell culverts by making necessary adjustments.

Caltrans Metric

DIST	COUNTY	ROUTE	KILOMETER POST TOTAL PROJECT	SHEET NO.	TOTAL SHEETS

Paul Cotter
REGISTERED CIVIL ENGINEER

July 1, 1997
PLANS APPROVAL DATE

REGISTERED PROFESSIONAL ENGINEER — Paul Cotter — No. 34509 — Exp. 9-30-99 — CIVIL — STATE OF CALIFORNIA

The State of California or its officers or agents shall not be responsible for the accuracy or completeness of electronic copies of this plan sheet.

STD. PLAN D81

STATE OF CALIFORNIA
DEPARTMENT OF TRANSPORTATION

CAST-IN-PLACE REINFORCED CONCRETE DOUBLE BOX CULVERT

NO SCALE

ALL DIMENSIONS ARE IN MILLIMETERS UNLESS OTHERWISE SHOWN

D81

Return to Table of Contents

DIST	COUNTY	ROUTE	KILOMETER POST TOTAL PROJECT	SHEET NO.	TOTAL SHEETS

Paul Cotter
REGISTERED CIVIL ENGINEER
July 1, 1997
PLANS APPROVAL DATE

REGISTERED PROFESSIONAL ENGINEER Paul Cotter No. 34509 Exp. 9-30-99 CIVIL STATE OF CALIFORNIA

The State of California or its officers or agents shall not be responsible for the accuracy or completeness of electronic copies of this plan sheet.

Caltrans Metric

DESIGN NOTES

Specifications:
Design:
Bridge Design Specification (1983 AASHTO Specifications with revisions by Caltrans)
Load Factors: 1.5 D + 1.5 E + 2.5 (L + I)
Where D=Dead Load
E=Earth Load
L=Live Load
I=Impact
Capacity reduction factor is included.

Loading:
Live load:
HS20-44 truck
Apply impact only to the roof slab.

Earth Cover (mm)	Impact (%)
Up to 300	30
301 to 600	20
601 to 900	10
Over 900	0

No surcharge on walls due to live load.
Earth load:
Earth densities for two conditions:
2240 kg/m³ vertical, 670 kg/m³ horizontal.
2240 kg/m³ vertical, 2240 kg/m³ horizontal.

Unit stresses:
f_c = 25 MPa
f_y = 400 MPa

Distribution "d" bars:
Up to and including 3.0 m cover
Expressed as a percent of main positive reinforcement required: $\frac{100}{\sqrt{S}}$, max 50% (unless traffic longitudinal).
Over 3.0 m cover
#13 @ 450 mm maximum.

Shear:
Maximum allowable shear, $v_c = .29\sqrt{f_c}$, MPa

Exclusions:
Compressive reinforcement and negative-moment reduction (for continuity) do not apply.
Axial loading on members has not been considered.

CONSTRUCTION NOTES

Construction loads:
Strutting required as shown on Standard Plan D88. Strutting may be required on culvert extensions when existing parapet is removed.

Expansion joints:
Invert:
No expansion joints shall be permitted.

Roof and Walls:
When cover is less than span length-
Place 13 mm expansion joint filler at 9 m± centers outside the paved roadway lanes and place Bridge Detail 3-2, Standard Plan B0-3, at 9 m centers under paved roadway lanes.
When cover is more than span length-
Place 13 mm expansion joint filler at 9 m± centers and additional 13 mm expansion joints at locations of change in foundation character, as directed by the Engineer.

Construction joints:
Temporary joints may be permitted if normal (or radial) to ℄ of RCB. Otherwise, the contractor is to submit a proposal for consideration.

Cutoff walls:
1.2 m cutoff walls are to be provided at inlet and/or outlet unless adjacent channel is lined and unless otherwise shown. These walls are to be extended if scour conditions warrant.

Earthwork:
See Standard Plan A62E.

Backfill:
See Standard Specifications, except that the difference in level of backfill (against outside walls) shall not exceed 600 mm.

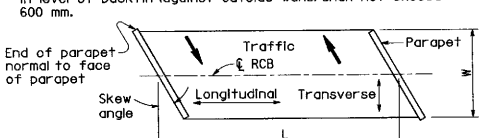

RCB TERMINOLOGY

GENERAL NOTES

Designation:
Standard single or multiple box culverts are shown on plans as span times height with maximum cover over roof thus: 2.4 m x 1.5 m RCB with 3 m or DBL 3m x 1.5 m RCB with 6 m, followed by alternatives.

Alternatives:
Single cell: Invert will be sloped unless "trapezoidal invert", "flat invert" or "V invert" is included in designation
Multiple cell: Invert will be vee unless "flat invert" is specified. Ends of culvert will be rounded unless "square ends" are designated. Parapets will be as shown unless designated in plans. Such designations may be different for inlet and outlet ends.

Quantities:
Quantities are for the sloped or vee invert and do not include "d" bars, nor splices in longitudinal bars, nor temperature reinforcement for exposed roof, nor concrete or reinforcement for parapets, cutoff walls or paving notches.

Reinforcement placement:
Main reinforcement is to be placed transverse or, for curved culverts, radial. When radial, reinforcing spacing of the "a", "f" and "g" bars is measured along the centerline. Stagger splices not shown. Hooks Hooks may be rotated or tilted, as necessary, for clearance.

Special reinforcement coverage:
Box standard plans are not to be used for culverts in a corrosive environment or where there is a severe abrasive flow condition or in freeze-thaw locations.

Special design:
Required for culverts with conditions, loads, design bearing pressures or sizes greater than those given on this plan or Standard Plans D80 & D81. Also required for multiple cell culverts with unequal spans. For culverts with railroad loading, see the current AREA design specification.

3 or more cells:
For culverts with more than two cells, use dimensions and reinforcement for the standard "double box culvert" and adjust quantities accordingly.

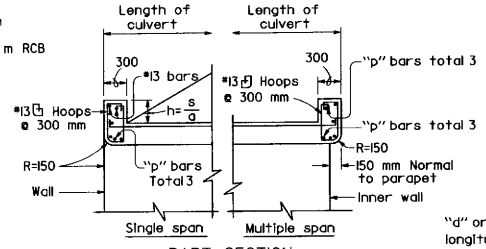

PART SECTION

s = Clear span (mm)
a = 12 cosine skew angle

PARAPET DETAIL

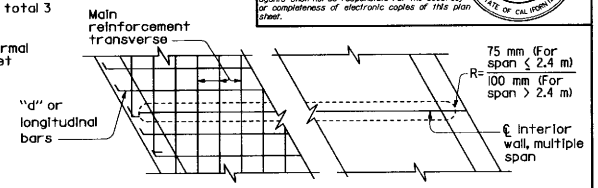

PART PLAN-SKEWED

Parapet "p" bars			
Span \ Skew Angle	0° TO 15°	16° TO 30°	31° TO 45°
1.2 m	#13	#13	#13
1.8 m	#13	#13	#16
2.4 m	#13	#16	#19
3.0 m	#16	#19	#22
3.7 m	#19	#22	#25
4.3 m	#22	#25	#29

PARAPET REINFORCEMENT

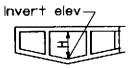

TYPICAL 3 CELL

Height \ Cover	3 m	6 m
1.8 m	95	150
2.4 m	105	160
3.0 m	115	170
3.7 m	125	180
4.3 m	135	190

DESIGN BEARING PRESSURE (KPa)

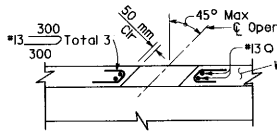

PART PLAN-SECTION

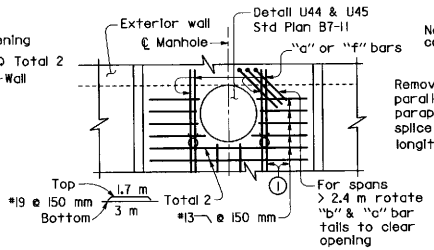

PART PLAN

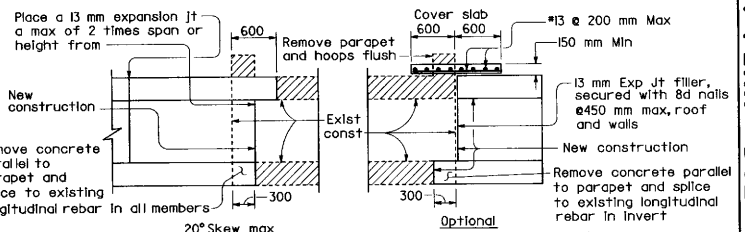

CULVERT EXTENSION

Bridge Detail 3-2 Std Plan B0-3, no expansion joint within 1.2 m of ℄ opening

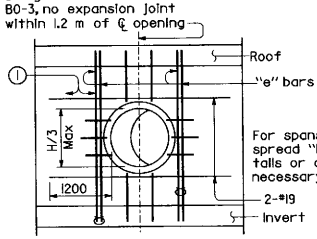

LONGITUDINAL SECTION

UTILITY OPENING-WALL

H= Height of box

(1) Adjacent to each side of the opening, place additional bars equivalent to half the interrupted main reinforcement.

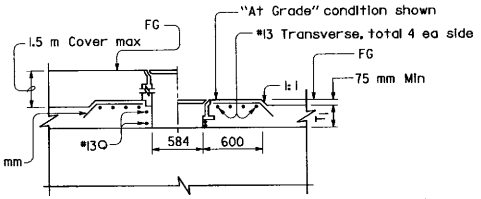

PART LONGITUDINAL SECTION

MANHOLE

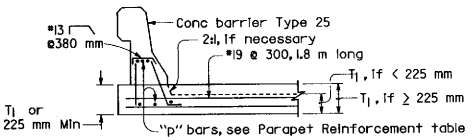

BARRIER SECTION (9.0 m MINIMUM)

STATE OF CALIFORNIA
DEPARTMENT OF TRANSPORTATION

SPECIAL DETAILS

CAST-IN-PLACE REINFORCED CONCRETE BOX CULVERT MISCELLANEOUS DETAILS

NO SCALE

ALL DIMENSIONS ARE IN MILLIMETERS UNLESS OTHERWISE SHOWN

D82

STD. PLAN D82

Return to Table of Contents

DIST	COUNTY	ROUTE	KILOMETER POST TOTAL PROJECT	SHEET NO.	TOTAL SHEETS

Paul Cotter
REGISTERED CIVIL ENGINEER

July 1, 1997
PLANS APPROVAL DATE

REGISTERED PROFESSIONAL ENGINEER Paul Cotter No. 34509 Exp. 9-30-99 CIVIL STATE OF CALIFORNIA

The State of California or its officers or agents shall not be responsible for the accuracy or completeness of electronic copies of this plan sheet.

Caltrans Metric

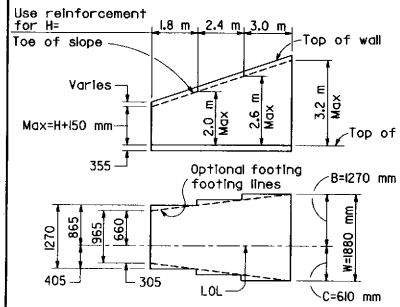

TYPICAL LAYOUT EXAMPLE

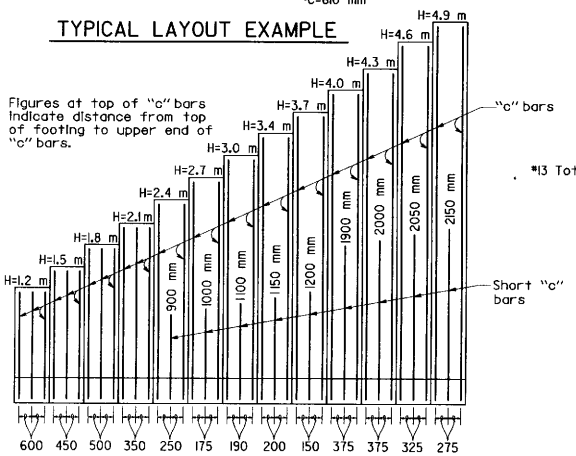

NOTE

Where 1:1.5 surcharge exceeds 1.5 m, use Type 2 retaining wall.

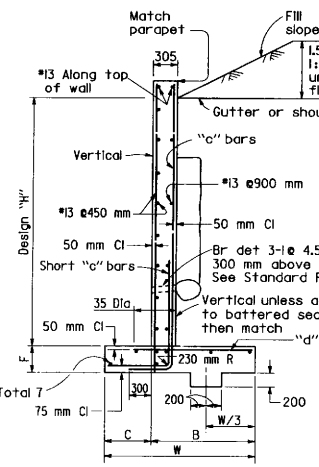

TYPICAL SECTION
H=1.2 m THRU 3.7 m

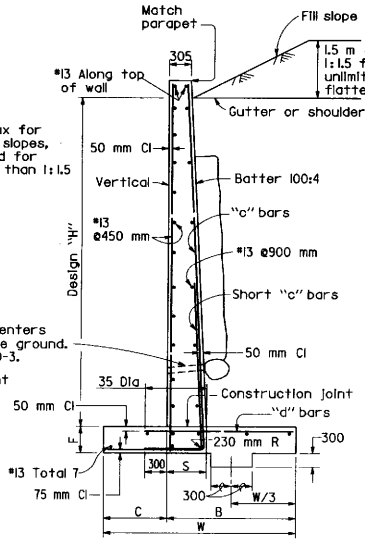

TYPICAL SECTION
H=4.0 m THRU 4.9 m

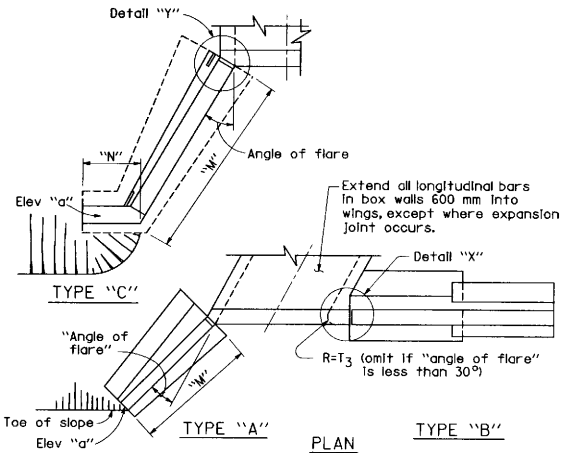

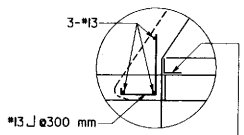

DETAIL "X"

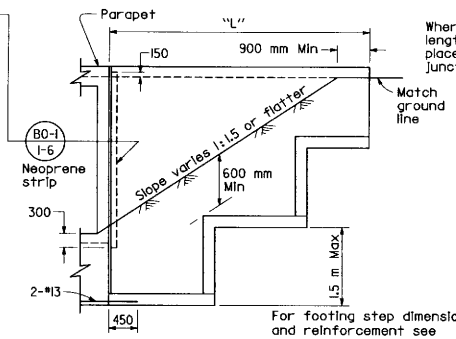

For footing step dimensions and reinforcement see "Footing Step" on Std Plan B3-8.

ELEVATION

Where design "H" exceeds 2.7 m or length of wingwall exceeds 1.5 "H", place 13 mm exp joint filler at junction of box and wall.

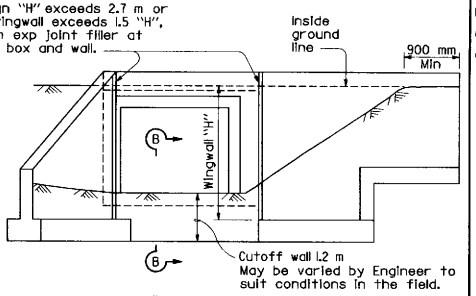

END ELEVATION

TYPE "A" TYPE "B"

STRAIGHT WINGWALLS

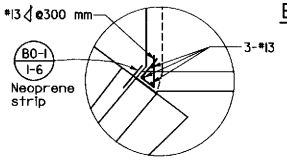

DETAIL "Y"

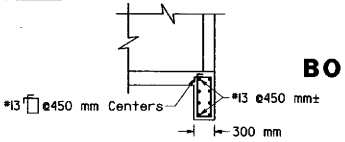

SECTION B-B

REINFORCED CONCRETE WINGWALLS

"H" (m)	1.2	1.5	1.8	2.1	2.4	2.7	3.0	3.4	3.7	4.0	4.3	4.6	4.9
W (mm)	965	1120	1270	1420	1575	1730	1880	2030	2185	2335	2490	2640	2795
C (mm)	305	355	405	455	510	560	610	660	710	760	815	865	915
B (mm)	660	765	865	965	1065	1170	1270	1370	1475	1575	1675	1775	1880
F (mm)	355												
Batter	None									4:100			
S (mm)	305	305	305	305	305	305	305	305	305	465	475	490	500
"c" Bars	*13@600	*13@450	*16@500	*16@350	@16@250	*16@175	*19@190	*22@200	*22@150	*29@375	*32@375	*32@325	*32@275
"d" Bars	*13@600	*13@450	*16@500	*16@350	@16@250	*19@350	*22@380	*25@400	*22@300	*25@375	*29@375	*29@325	*29@275
Conc m³/m	0.80	0.95	1.10	1.23	1.38	1.53	1.68	1.83	1.98	2.56	2.76	2.96	3.16
Reinf kg/m	19	24	28	37	45	55	73	92	113	109	134	155	186

Quantities do not include that portion above the design "H" limit.

NOTES

Unit Stresses: f_s=165 MPa, f_c=9 MPa, n=10

Maximum Toe Pressure = 140 kPa

Elevations, length and angle of flare of wings may be varied by the Engineer to suit conditions encountered in the field. Walls designed for 600 mm liveload surcharge, 1:1.5 sloping surcharge not to exceed 1.5 m in elevation plus 600 mm liveload surcharge, or unlimited 1:2 surcharge.

Dimensions "H","L","M","N", Elevation "a" and "Angle of flare" (as apply) are shown on the plans.

Wall height may be exceeded by 150 mm before going to next greater "H".

Eliminate cutoff wall if adjacent channel is paved and skew is 20° maximum.

For wall offset values, see Standard Plan B3-8.

STATE OF CALIFORNIA
DEPARTMENT OF TRANSPORTATION

BOX CULVERT WINGWALLS TYPES A, B AND C

NO SCALE

ALL DIMENSIONS ARE IN MILLIMETERS UNLESS OTHERWISE SHOWN

D84

STD. PLAN D84

Return to Table of Contents

DIST	COUNTY	ROUTE	KILOMETER POST TOTAL PROJECT	SHEET NO.	TOTAL SHEETS

Paul Cotter
REGISTERED CIVIL ENGINEER

July 1, 1997
PLANS APPROVAL DATE

REGISTERED PROFESSIONAL ENGINEER Paul Cotter No. 34509 Exp. 9-30-99 CIVIL STATE OF CALIFORNIA

The State of California or its officers or agents shall not be responsible for the accuracy or completeness of electronic copies of this plan sheet.

California Metric

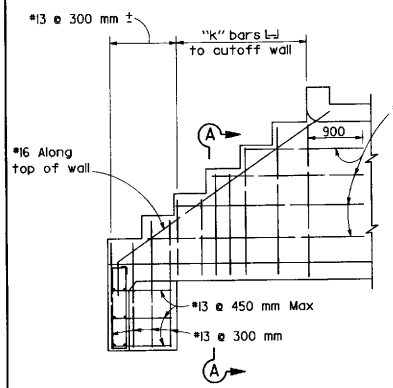

LONGITUDINAL SECTION
Showing reinforcement in outside face

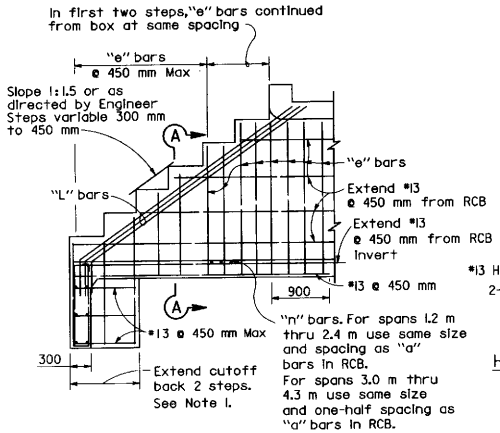

LONGITUDINAL SECTION
Showing reinforcement in inside face

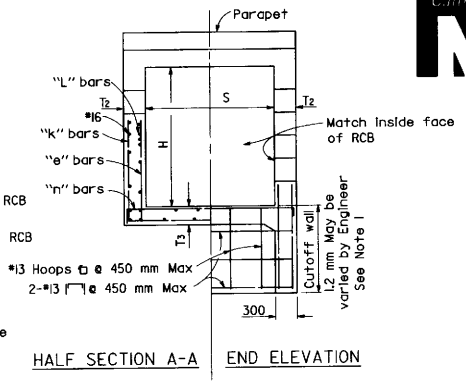

HALF SECTION A-A END ELEVATION

Dimensions S and T_3 to be same as adjacent RCB.
T_2 = Same as adjacent RCB (200 mm Min).

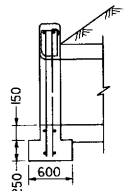

SECTION B-B

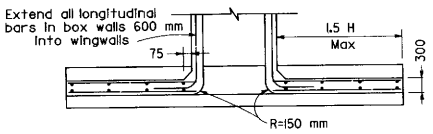

SECTION C-C

TYPE "E" STEPPED WINGWALL (SINGLE BOX CULVERT)

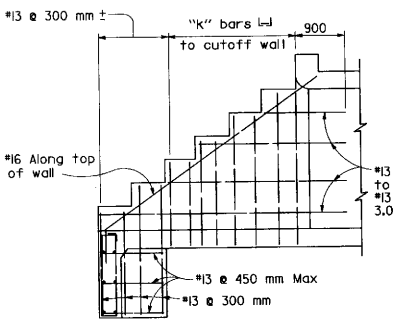

LONGITUDINAL SECTION
Showing reinforcement in outside face

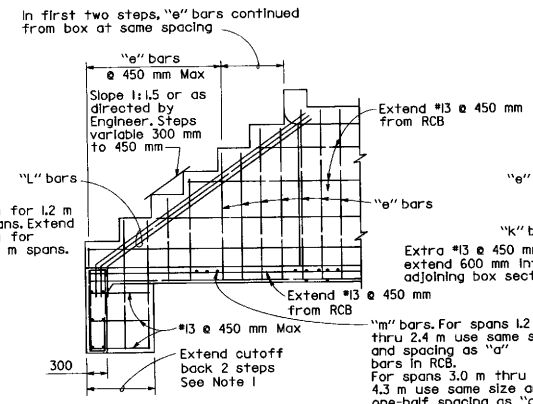

LONGITUDINAL SECTION
Showing reinforcement in inside face

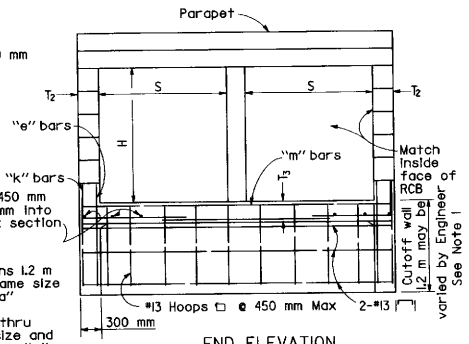

END ELEVATION

Dimensions S and T_3 to be same as adjacent RCB.
T_2 = Same as adjacent RCB (200 mm min).

TYPE "E" STEPPED WINGWALL (MULITPLE BOX CULVERT)

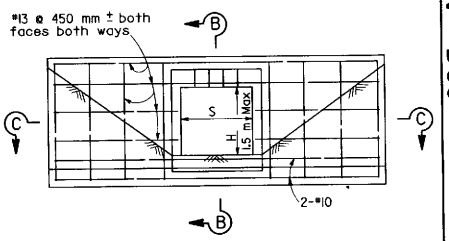

ELEVATION

TYPE "D" STRAIGHT WINGWALL

Details similar for multiple span boxes.
For Parapet Details not shown see Standard Plan D82.

NOTES

1. Eliminate cutoff walls if adjacent channel is paved.
2. For "H" not shown use reinforcement for next greater height.

TABLE OF REINFORCEMENT FOR TYPE "E" WINGWALLS

H (m) (See Note 2)		0.9	1.2	1.5	1.8	2.1	2.4	3.0	3.7	4.3
"k" Bars	Bar No	13	13	16	16	16	16	16	16	16
	Spacing(mm)	300	300	300	250	225	200	175	125	100
"L" Bars	Bar No	16	16	19	19	22	22	22	22	22
	Number each wall	2	2	3	3	3	3	3	3	3

STATE OF CALIFORNIA
DEPARTMENT OF TRANSPORTATION

BOX CULVERT WINGWALLS TYPES D AND E

NO SCALE

ALL DIMENSIONS ARE IN MILLIMETERS UNLESS OTHERWISE SHOWN

D85

STD. PLAN D85

Return to Table of Contents

DIST	COUNTY	ROUTE	KILOMETER POST TOTAL PROJECT	SHEET NO.	TOTAL SHEETS

California Metric

Paul Cotter
REGISTERED CIVIL ENGINEER

July 1, 1997
PLANS APPROVAL DATE

REGISTERED PROFESSIONAL ENGINEER Paul Cotter No. 34509 Exp. 9-30-99 CIVIL STATE OF CALIFORNIA

The State of California or its officers or agents shall not be responsible for the accuracy or completeness of electronic copies of this plan sheet.

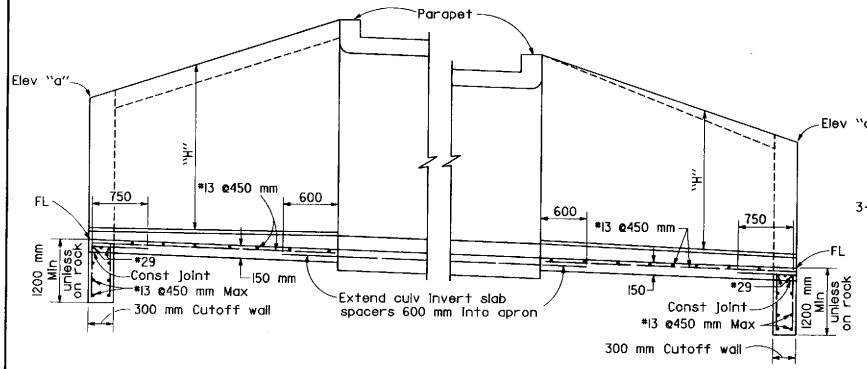

TYPICAL WITH STIFFENING BEAM TYPICAL WITHOUT STIFFENING BEAM

PART LONGITUDAL SECTION

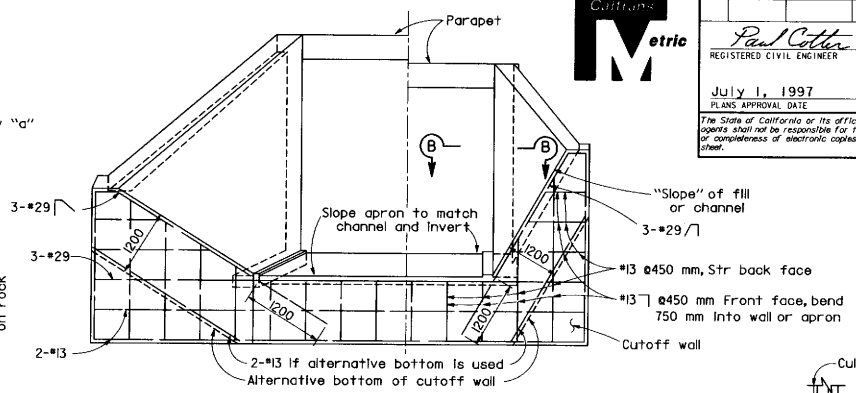

END ELEVATION

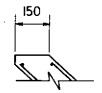

WITHOUT STIFFENING BEAM

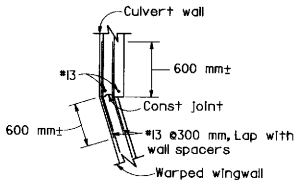

SECTION B-B

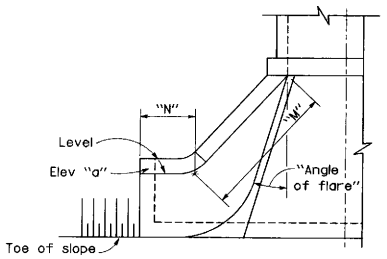

ALTERNATIVE WARPED WINGWALL

Use where additional protection to toe of embankment is required.

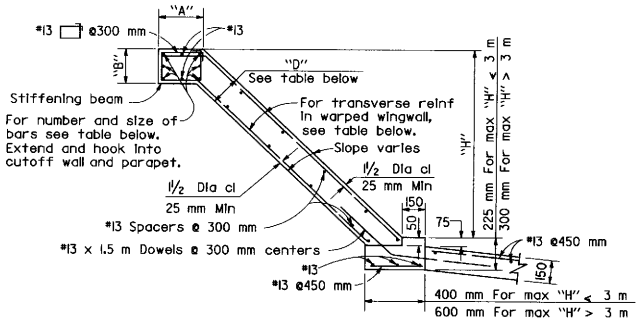

SECTION C-C

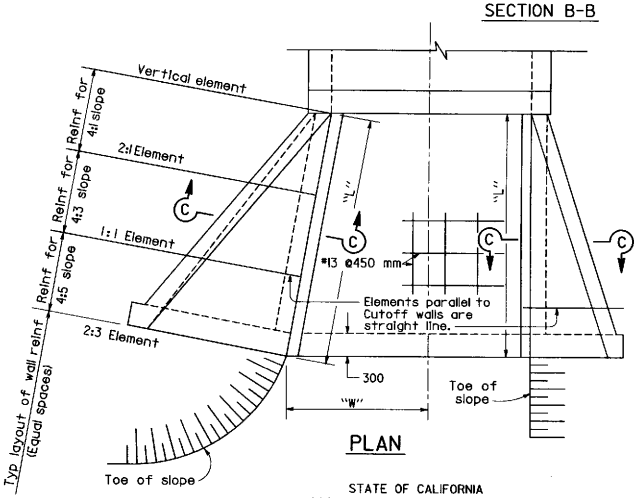

PLAN

STATE OF CALIFORNIA
DEPARTMENT OF TRANSPORTATION

BOX CULVERT WARPED WINGWALL

NO SCALE

ALL DIMENSIONS ARE IN MILLIMETERS UNLESS OTHERWISE SHOWN

D86A

WARPED WINGWALLS

WALL DIMENSIONS AND REINFORCING

Element Slope	"H"	2.4 m or less	3.0 m	3.7 m	4.3 m	4.9 m	5.5 m	6.1m
4:1	Front face reinf	#13@300	#13@175	#16@175	#16@125	#19@150	#22@175	#22@150
	Rear face reinf	#13@300	#13@300	#13@300	#13@300	#13@300	#13@300	#13@300
4:3	Front face reinf	#13@300	#13@300	#13@300	#13@300	#13@250	#13@200	#13@150
	Rear face reinf	#13@300	#13@300	#13@300	#13@250	#13@175	#13@150	#16@200
4:5	Front face reinf	#13@300	#13@300	#13@300	#13@300	#13@300	#13@300	#13@300
	Rear face reinf	#13@200	#13@200	#13@125	#16@150	#19@175	#19@150	#22@150
"D" at Cutoff Wall (mm)		150	150	150	190	200	240	280
"D" at Culvert (mm)		150	150	150	200	240	280	330

STIFFENING BEAM DIMENSIONS AND REINFORCING

"H" Max \ "L"	3.7 m	4.3 m	4.9 m	5.5 m	6.1 m	7.6 m	9.1 m	10.7 m	12.2 m or more
1.8 m	No beam. Place 2-#19 in each face along top of wall.								
2.4 m									
3.0 m				"A"= 300					
3.7 m				"B"= 225					
4.3 m	Total 6-#19					"A"= 450		"A"= 560	
4.9 m				"B"= 300			"B"= 300		"A"= 600
5.5 m			Total 6-#22			Total 6-#25		"B"= 450	
6.1 m							Total 8-#29		

NOTES
Walls designed for 600 mm surcharge; earth density = 1900 kg/m³ ; equivalent fluid pressure = 5.66 KPa/m.
Vary "D" of warped wall uniformly from that at cutoff wall to that at culvert, for maximum "H" > 3.7m.
Where abrasion is anticipated increase apron thickness to 175 mm minimum to provide 50 mm minimum reinforcement coverage.
Dimensions "L", "W", "H", "M", "N", Elevation "a", "Angle of flare", and end "Slope" (as apply) are shown on the plans.

STD. PLAN D86A

Return to Table of Contents

DIST	COUNTY	ROUTE	KILOMETER POST TOTAL PROJECT	SHEET NO.	TOTAL SHEETS

Paul Cotter
REGISTERED CIVIL ENGINEER

July 1, 1997
PLANS APPROVAL DATE

REGISTERED PROFESSIONAL ENGINEER Paul Cotter No. 34509 Exp. 9-30-99 CIVIL STATE OF CALIFORNIA

The State of California or its officers or agents shall not be responsible for the accuracy or completeness of electronic copies of this plan sheet.

California Metric

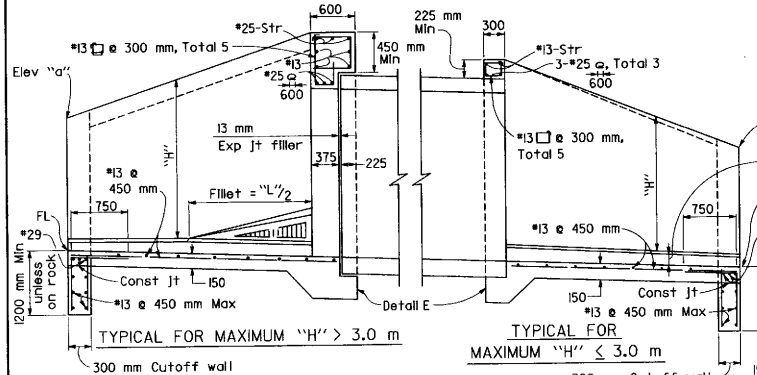

PART LONGITUDINAL SECTION

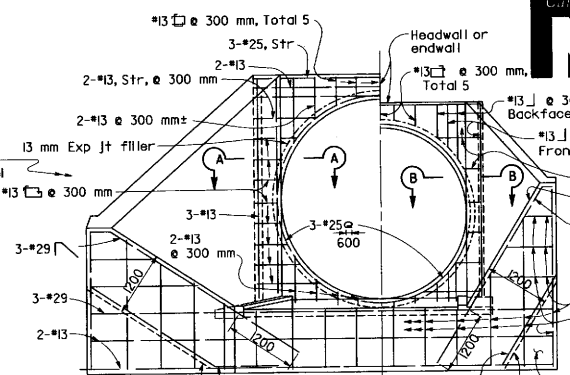

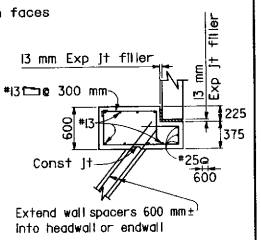

NOTE

RCP shown. Metal pipe similar except eliminate the expansion joint and use hook bolts @ 480 mm± spacing. Size and length provided by manufacturer.

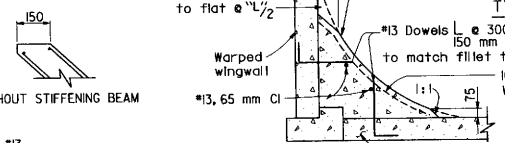

SECTION F-F

END ELEVATION

If at upstream end, fillet is not shown

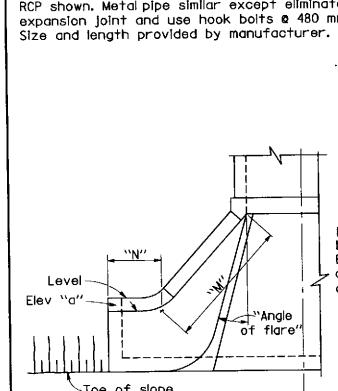

ALTERNATIVE WARPED WINGWALL

Use where additional protection to toe of embankment is required. If at upstream end, fillet is not shown.

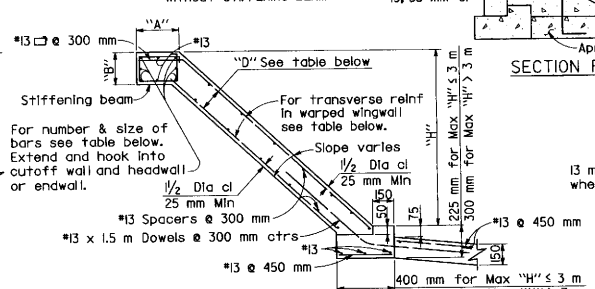

SECTION C-C

Where abrasion is anticipated, increase apron thickness to 175 mm minimum to provide 50 mm minimum reinforcement coverage.

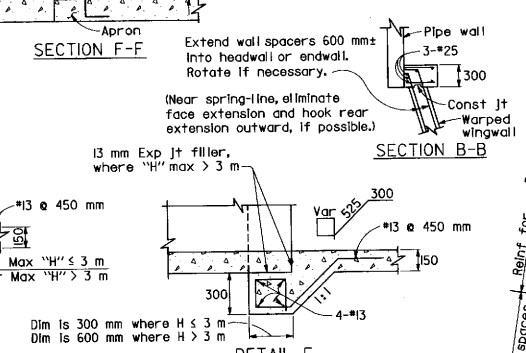

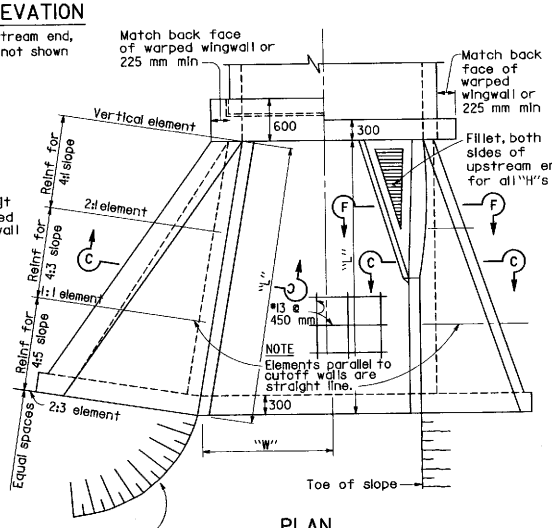

PLAN

STATE OF CALIFORNIA
DEPARTMENT OF TRANSPORTATION

PIPE CULVERT HEADWALLS, ENDWALLS AND WARPED WINGWALLS

NO SCALE

ALL DIMENSIONS ARE IN MILLIMETERS UNLESS OTHERWISE SHOWN

D86B

WARPED WINGWALLS

WALL DIMENSIONS AND REINFORCING

Element Slope	"H"	2.4 m or less	3.0 m	3.7 m	4.3 m	4.9 m	5.5 m	6.1 m
4:1	Front face reinf	*13@300	*13@175	*16@175	*16@125	*19@150	*22@175	*22@150
	Rear face reinf	*13@300	*13@300	*13@300	*13@300	*13@300	*13@300	*13@300
4:3	Front face reinf	*13@300	*13@300	*13@300	*13@300	*13@250	*13@200	*13@150
	Rear face reinf	*13@300	*13@300	*13@300	*13@250	*13@175	*13@150	*16@200
4:5	Front face reinf	*13@300	*13@300	*13@300	*13@300	*13@300	*13@300	*13@300
	Rear face reinf	*13@200	*13@200	*13@125	*16@150	*19@175	*19@150	*22@150
"D" at Cutoff Wall (mm)		150	150	150	190	200	240	280
"D" at Culvert (mm)		150	150	150	200	240	280	330

STIFFENING BEAM DIMENSIONS AND REINFORCING

"H" Max \ "L"	3.7 m	4.3 m	4.9 m	5.5 m	6.1 m	7.6 m	9.1 m	10.7 m	12.2 m or more
1.8 m	No beam. Place 2-*19 in each face along top of wall.								
2.4 m									
3.0 m									
3.7 m			"B"= 225			"A"= 450			
4.3 m					Total 6-*19			"A"= 560	
4.9 m				Total 6-*22		"B"= 300	"B"= 300		"A"= 600
5.5 m							Total 6-*25	"B"= 450	
6.1 m								Total 8-*29	

"A"= 300

NOTES Walls designed for 600 mm surcharge; earth density = 1900 kg/m³ ; equivalent fluid pressure = 5.66 kPa/m.
Vary "D" of warped wall uniformly from that at cutoff wall to that at headwall or endwall, for maximum "H" > 3.7m.
Dimensions "L", "W", "H", "M", "N", Elevation "a", "Angle of flare", and end "Slope" (as apply) are shown on the plans.

STD. PLAN D86B

Return to Table of Contents

DIST	COUNTY	ROUTE	KILOMETER POST TOTAL PROJECT	SHEET NO.	TOTAL SHEETS

Paul Cotter
REGISTERED CIVIL ENGINEER

July 1, 1997
PLANS APPROVAL DATE

REGISTERED PROFESSIONAL ENGINEER Paul Cotter No. 34509 Exp. 9-30-99 CIVIL STATE OF CALIFORNIA

The State of California or its officers or agents shall not be responsible for the accuracy or completeness of electronic copies of this plan sheet.

Caltrans Metric

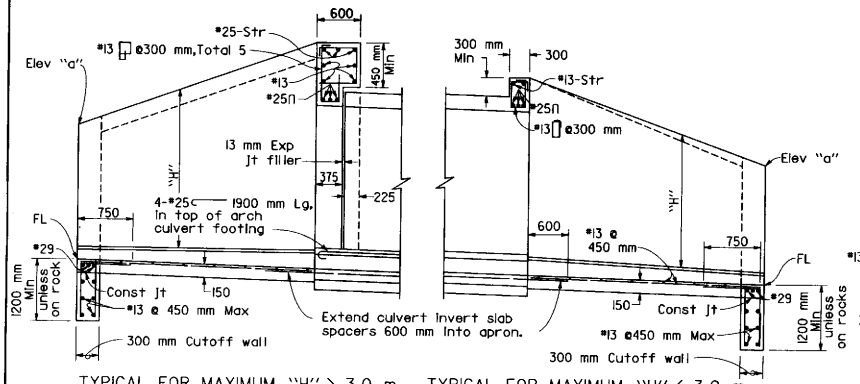

TYPICAL FOR MAXIMUM "H" > 3.0 m TYPICAL FOR MAXIMUM "H" ≤ 3.0 m

PART LONGITUDINAL SECTION

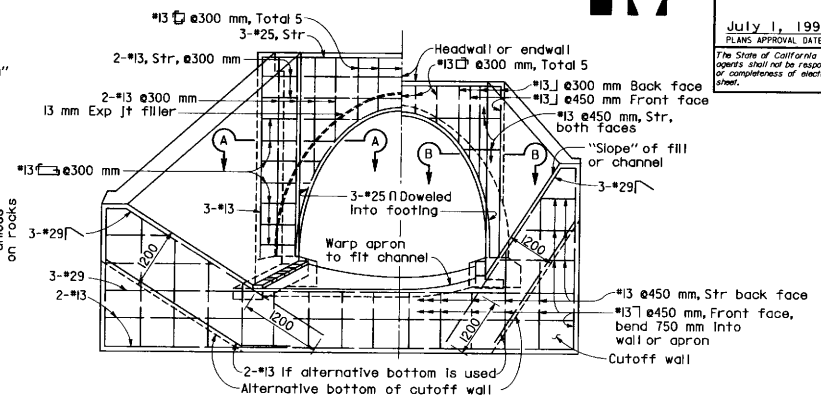

TYPICAL FOR MAXIMUM "H" > 3.0 m TYPICAL FOR MAXIMUM "H" ≤ 3.0 m

END ELEVATION

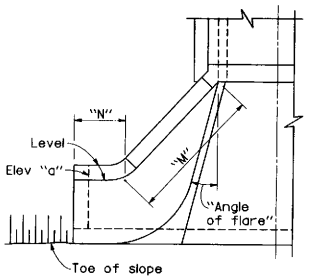

ALTERNATIVE WARPED WINGWALL

Use where additional protection to toe of embankment is required.

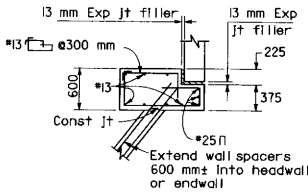

SECTION A-A

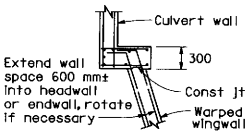

SECTION B-B

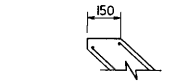

WITHOUT STIFFENING BEAM

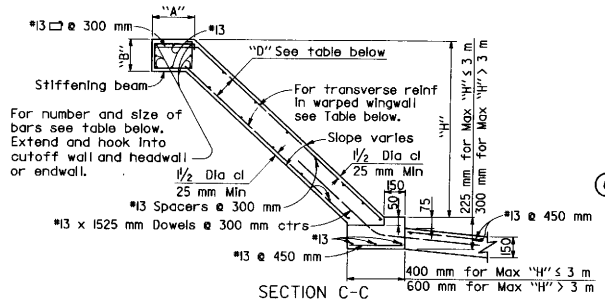

SECTION C-C

Where abrasion is anticipated, increase apron thickness to 175 mm minimum to provide 50 mm minimum reinforcement coverage.

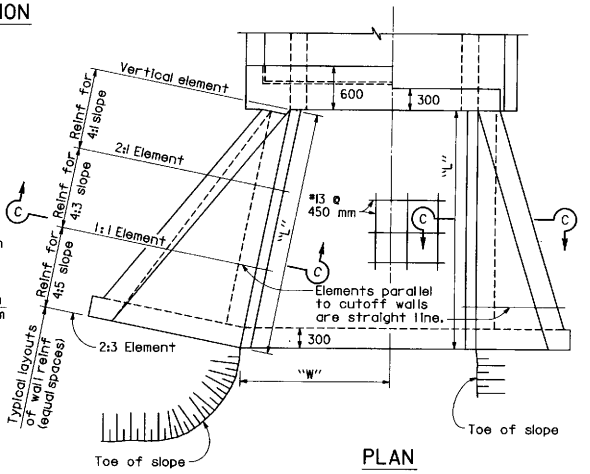

PLAN

WARPED WINGWALLS

WALL DIMENSIONS AND REINFORCING

Element Slope	"H"	2.4 m or less	3.0 m	3.7 m	4.3 m	4.9 m	5.5 m	6.1 m
4:1	Front face reinf	*13@300	*13@175	*16@175	*16@125	*19@150	*22@175	*22@150
	Rear face reinf	*13@300	*13@300	*13@300	*13@300	*13@300	*13@300	*13@300
4:3	Front face reinf	*13@300	*13@300	*13@300	*13@300	*13@250	*13@200	*13@150
	Rear face reinf	*13@300	*13@300	*13@300	*13@250	*13@175	*13@150	*16@200
4:5	Front face reinf	*13@300	*13@300	*13@300	*13@300	*13@300	*13@300	*13@300
	Rear face reinf	*13@200	*13@200	*13@125	*16@150	*19@175	*19@150	*22@150
"D" at Cutoff Wall (mm)		150	150	150	190	200	240	280
"D" at Culvert (mm)		150	150	150	200	240	280	330

STIFFENING BEAM DIMENSIONS AND REINFORCING

"H" Max \ "L"	3.7 m	4.3 m	4.9 m	5.5 m	6.1 m	7.6 m	9.1 m	10.7 m	12.2 m or more
1.8 m	No beam. Place 2-*19 in each face along top of wall.								
2.4 m				"A"= 300					
3.0 m				"B"= 225					
3.7 m	Total 6-*19					"A"= 450			
4.3 m				"B"= 300				"A"= 560	
4.9 m			Total 6-*22				"B"= 300		"A"= 600
5.5 m						Total 6-*25	"B"= 450		
6.1 m							Total 8-*29		

NOTES

Walls designed for 600 mm surcharge; earth load = 1900 kg/m^3 ; equivalent fluid pressure = 5.66 KPa/m.
Vary "D" of warped wall uniformly from that at cutoff wall to that at headwall or endwall, for maximum "H" > 300 mm.
Dimensions "L", "W", "H", "M", "N", Elev "a", "Angle of flare", and end "Slope" (as apply) are shown on the plans.

STATE OF CALIFORNIA
DEPARTMENT OF TRANSPORTATION

ARCH CULVERT HEADWALL, ENDWALL AND WARPED WINGWALL

NO SCALE

ALL DIMENSIONS ARE IN MILLIMETERS UNLESS OTHERWISE SHOWN

D86C

STD. PLAN D86C

Return to Table of Contents

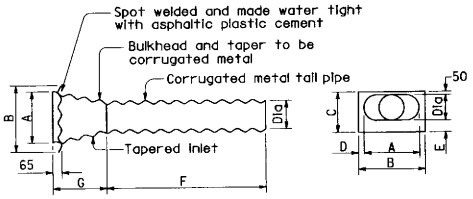

Bulkhead and taper of same thickness as tail pipe with 2.0 mm maximum. Tail pipe of same thickness as downdrain pipe.

ENTRANCE TAPER - TYPE 1 ALTERNATIVE A

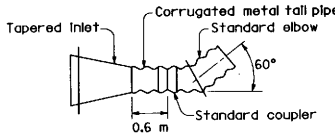

Tapered inlet of same construction and dimensions as Type 1- Alternative A or B except tail pipe length will be 0.6 m.

ENTRANCE TAPER - TYPE 2

Taper joints may be welded or riveted. Dimensions to be as tabulated below for Type 1 Alternatives A and B.

DIA (mm)	A (mm)	B (mm)	C (mm)	D (mm)	E (mm)	F (m)	G (m)
200	410	650	380	120	130	1.8	0.6
300	460	650	485	95	135	1.8	0.6
375	540	770	585	115	160	1.8	0.6
450	610	860	685	125	185	1.8	0.6
600	870	1170	890	150	240	1.2	1.2

ENTRANCE TAPER - TYPE 1 ALTERNATIVE A AND B

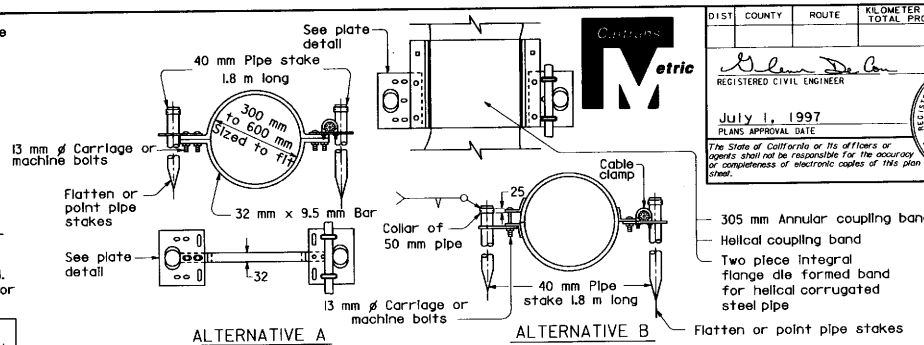

ANCHOR ASSEMBLY

Cable and cable clamps to be used when required by the Special Provisions.

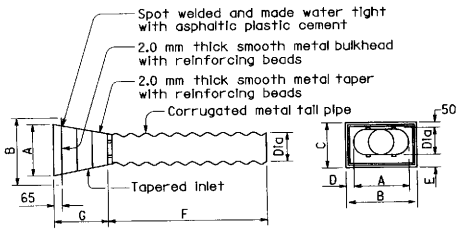

Tail pipe of same thickness as downdrain pipe.

ENTRANCE TAPER - TYPE 1 ALTERNATIVE B

CMP dimensions as tabulated below

P (mm)	250	375	450	525	675
Q (mm)	200	300	375	450	600

Slip joint to be same thickness as downdrain pipe.

DIA (mm)	MIN L	M (mm)	N (mm)
200	3 m	450	200
300	5 m	500	300
375	8 m	600	375
450	9 m	750	400
600	12 m	900	450

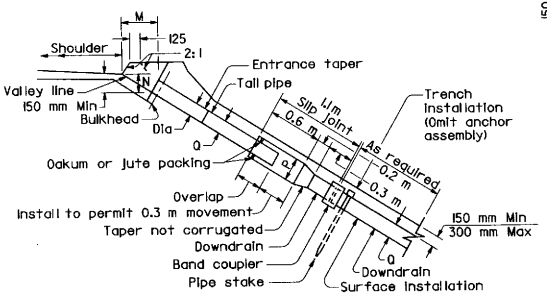

SECTION A-A (TYPE 1)

NOTES

1. All hardware to be galvanized after fabrication. All pipe stakes to be either galvanized after fabrication, or be fabricated from pre-galvanized pipe. If pre-galvanized pipe is used, weld areas shall be cleaned, and painted with zinc-rich primer.
2. Either Alternative A or Alternative B anchor assemblies and pipe stakes may be used at Contractor's option for corrugated steel pipe or corrugated aluminum pipe. Alternative A anchor assembly only to be placed in annular corrugation. Alternative A anchor assembly may be placed on annular coupling band if securely fastened on downstream side of joint. Alternative B anchor assembly to be fastened to pipe sections and not to a band coupler used to join sections.

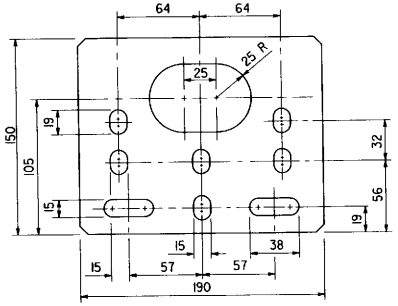

PLATE DETAIL

Material to be 6.4 mm plate galvanized after fabrication.

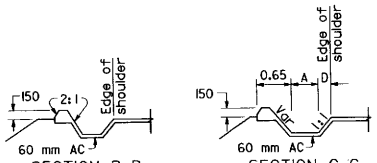

NOTE

1. Cable, slip joint or anchor assembly to be placed when specified.
2. Slip joint to be omitted when completely buried.
3. Slip joint for Type 1 entrance taper shown. Type 2 similar.

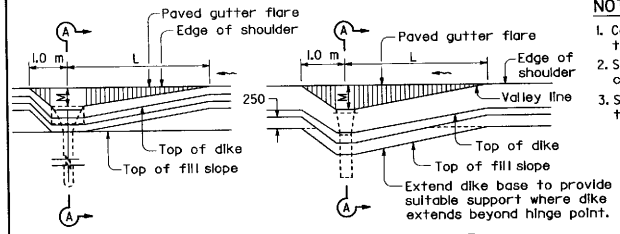

PLAN

TYPE 1

DIA D	MIN L
200 mm	5 m
300 mm	6 m
375 mm	9 m
450 mm	11 m
600 mm	14 m

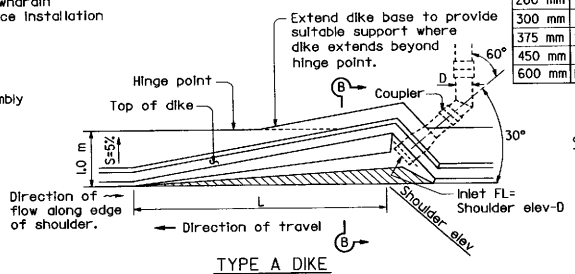

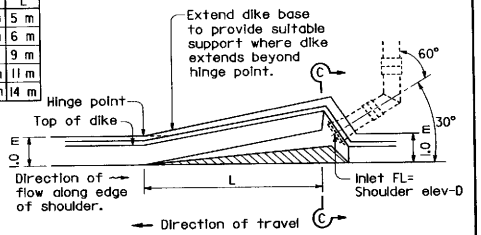

PLAN

TYPE 2

(For use on full freeway sections ONLY with grades OF 2% or greater.)

ENTRANCE TAPER AND PIPE DOWNDRAIN

DIST	COUNTY	ROUTE	KILOMETER POST TOTAL PROJECT	SHEET NO.	TOTAL SHEETS

REGISTERED CIVIL ENGINEER

July 1, 1997

PLANS APPROVAL DATE

REGISTERED PROFESSIONAL ENGINEER Glenn DeCou No. C34547 Exp. 9-30-99 CIVIL STATE OF CALIFORNIA

The State of California or its officers or agents shall not be responsible for the accuracy or completeness of electronic copies of this plan sheet.

STATE OF CALIFORNIA
DEPARTMENT OF TRANSPORTATION

OVERSIDE DRAINS

NO SCALE

ALL DIMENSIONS ARE IN MILLIMETERS UNLESS OTHERWISE SHOWN

D87A

STD. PLAN D87A

Return to Table of Contents

DIST	COUNTY	ROUTE	KILOMETER POST TOTAL PROJECT	SHEET NO.	TOTAL SHEETS

REGISTERED CIVIL ENGINEER

July 1, 1997
PLANS APPROVAL DATE

Glenn DeCou No. C34547 Exp. 9-30-99 CIVIL

The State of California or its officers or agents shall not be responsible for the accuracy or completeness of electronic copies of this plan sheet.

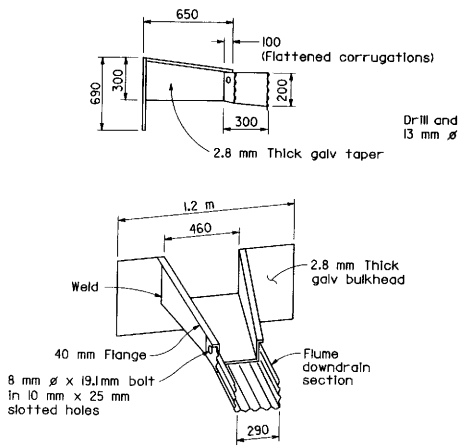

TAPERED INLET

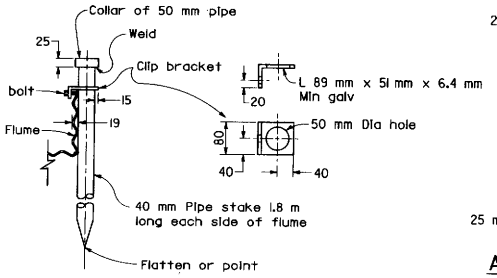

PIPE STAKE ANCHOR DETAIL

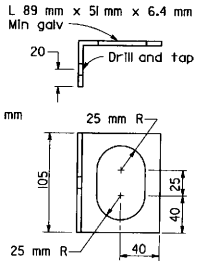

ALTERNATIVE CLIP BRACKET DETAIL

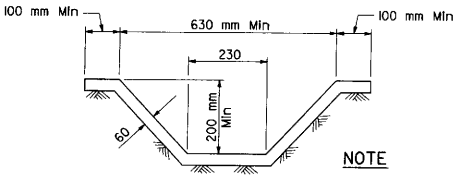

SECTION C-C
See Note 1

NOTE

1. Cross section of slope ditch may be semicircular, vee or trapezoidal.

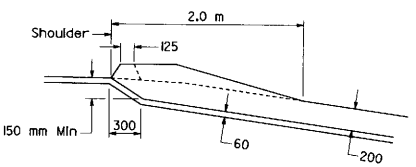

SECTION E-E

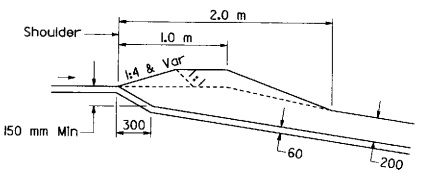

SECTION G-G

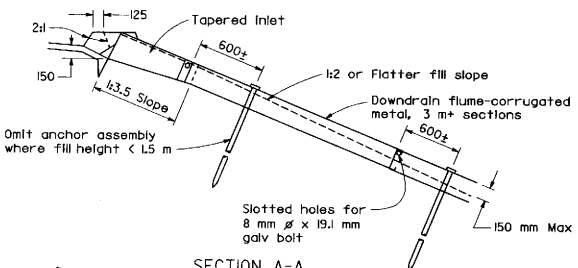

SECTION A-A

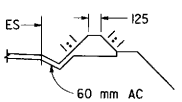

SECTION D-D

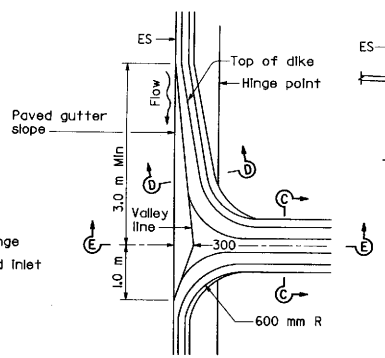

PLAN
TYPE A DIKE

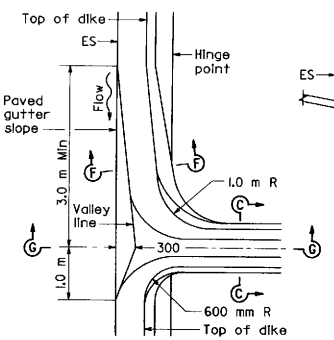

PLAN
MOUNTABLE DIKE

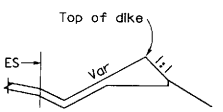

SECTION F-F

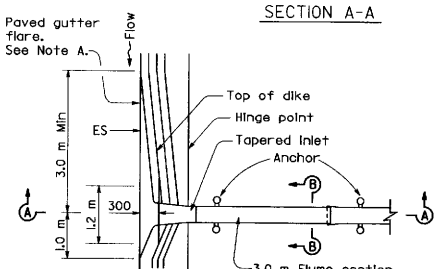

NOTE A
In sag location, use 3.0 m length of paved gutter flare on both sides of inlet.

PLAN

TAPERED INLET AND FLUME DOWNDRAIN

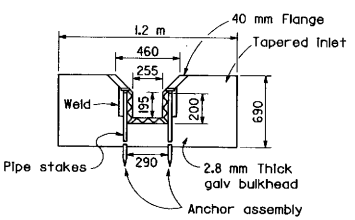

SECTION B-B

ASPHALT CONCRETE OVERSIDE DRAINS

STATE OF CALIFORNIA
DEPARTMENT OF TRANSPORTATION

OVERSIDE DRAINS

NO SCALE

ALL DIMENSIONS ARE IN MILLIMETERS UNLESS OTHERWISE SHOWN

D87B

STD. PLAN D87B

Return to Table of Contents

DIST	COUNTY	ROUTE	KILOMETER POST TOTAL PROJECT	SHEET NO.	TOTAL SHEETS

Caltrans Metric

REGISTERED CIVIL ENGINEER

July 1, 1997
PLANS APPROVAL DATE

REGISTERED PROFESSIONAL ENGINEER Glenn DeCou No. C34547 Exp. 9-30-99 CIVIL STATE OF CALIFORNIA

The State of California or its officers or agents shall not be responsible for the accuracy or completeness of electronic copies of this plan sheet.

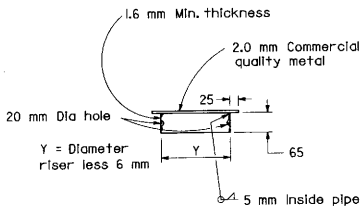

WELDED METAL COVER

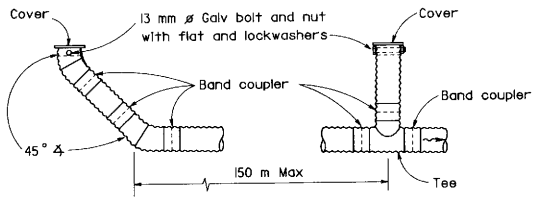

TERMINAL RISER VERTICAL RISER

Metal pipe risers and perforated metal pipe underdrain shown. Use type of pipe specified.

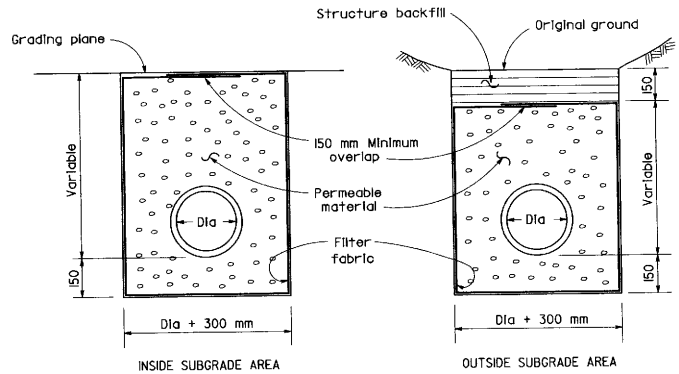

EXCAVATION AND BACKFILL

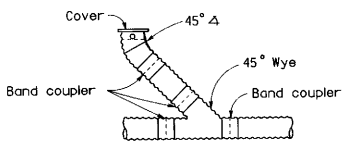

45° RISER

UNDERDRAIN RISERS

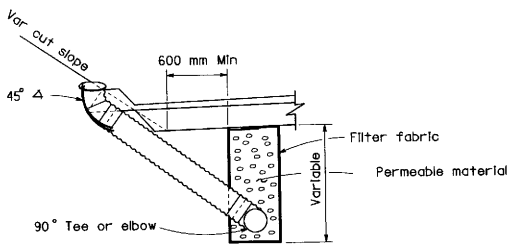

UNDERDRAIN LOCATION AND RISERS ANGLED TO CUT SLOPE

STATE OF CALIFORNIA
DEPARTMENT OF TRANSPORTATION

UNDERDRAINS

NO SCALE

ALL DIMENSIONS ARE IN MILLIMETERS UNLESS OTHERWISE SHOWN

D87C

STD. PLAN D87C

Return to Table of Contents

DIST	COUNTY	ROUTE	KILOMETER POST TOTAL PROJECT	SHEET NO.	TOTAL SHEETS

Metric

Paul Cotter
REGISTERED CIVIL ENGINEER

July 1, 1997
PLANS APPROVAL DATE

REGISTERED PROFESSIONAL ENGINEER Paul Cotter No. 34509 Exp. 9-30-99 CIVIL STATE OF CALIFORNIA

The State of California or its officers or agents shall not be responsible for the accuracy or completeness of electronic copies of this plan sheet.

TABLE OF MINIMUM COVER AND STRUTTING REQUIREMENTS FOR CONSTRUCTION LOADS

TYPE					80-222 kN AXLE		222-334 kN AXLE		334-489 kN AXLE		489-667 kN AXLE	
	MAXIMUM DESIGN FILL	SPAN	CELLS	MIN COVER	STRUTS REQUIRED	STRUT SIZE AND SPACING	STRUTS REQUIRED	STRUT SIZE AND SPACING	STRUTS REQUIRED	STRUT SIZE AND SPACING	STRUTS REQUIRED	STRUT SIZE AND SPACING
BOX CULVERTS	3.0 m and 6.0 m	1.2 m to 2.4 m	Single and Multiple	1.5 m	—	—	—	—	—	—	—	—
	3.0 m	3.0 m to 4.3 m	Single and Multiple	1.5 m	—	—	1/3 Points	Struts 140x140 mm @ 1.0 m Sills 140x184 mm	1/3 Points	Struts 140x184 mm @ 1.0 m Sills 140x184 mm	1/3 Points	Struts 140x184 mm @ 1.0 m Sills 140x184 mm
	6.0 m	3.0 m to 4.3 m	Single and Multiple	1.5 m	—	—	—	—	—	—	—	—

TABLE OF MINIMUM COVER FOR CONSTRUCTION LOADS

TYPE		DIA OR SPAN	80-222kN AXLE	222-334 kN AXLE	334-489 kN AXLE	489-667 kN AXLE
REINFORCED CONCRETE CULVERTS	Pipes	Dia 300 mm to 1000 mm	600 mm	900 mm	900 mm	900 mm
		Dia 1050 mm to 2700 mm	$\frac{Dia}{1.75}$ or 900 mm	$\frac{Dia}{1.75}$ or 900 mm	$\frac{Dia}{1.75}$ or 900 mm	$\frac{Dia}{1.75}$ or 900 mm
	Arches	Spans to 4.3 m	$\frac{Span}{2.5}$ or 1.2 m	$\frac{Span}{2.5}$ or 1.2 m	$\frac{Span}{2.5}$ or 1.2 m	$\frac{Span}{2.5}$ or 1.2 m
		Spans 4.6 m to 6.7 m	$\frac{Span}{3.5}$ or 1.8 m	$\frac{Span}{3.5}$ or 1.8 m	$\frac{Span}{3.5}$ or 1.8 m	$\frac{Span}{3.5}$ or 1.8 m
METAL CULVERTS	Pipes	Dia to 3000 mm	$\frac{Dia}{1.75}$ or 1.2 m	$\frac{Dia}{1.75}$ or 1.2 m	$\frac{Dia}{1.75}$ or 1.2 m	$\frac{Dia}{1.75}$ or 1.2 m
		Dia over 3000 mm	$\frac{Dia}{3}$ or 1.8 m	$\frac{Dia}{3}$ or 1.8 m	$\frac{Dia}{3}$ or 1.8 m	$\frac{Dia}{3}$ or 1.8 m
	Pipe Arches	All Spans	$\frac{Span}{3}$ or 1.2 m	$\frac{Span}{3}$ or 1.2 m	$\frac{Span}{3}$ or 1.2 m	$\frac{Span}{3}$ or 1.2 m
	Structural Plate Pipe, Arches and Vehicular Undercrossings	All Spans	$\frac{Span}{3}$ or 1.5 m	$\frac{Span}{3}$ or 1.5 m	$\frac{Span}{3}$ or 1.5 m	$\frac{Span}{3}$ or 1.5 m
Plastic Pipe		Dia 300 mm to 1200 mm	$\frac{Dia}{1.75}$ or 1.2 m	$\frac{Dia}{1.75}$ or 1.2 m	$\frac{Dia}{1.75}$ or 1.2 m	$\frac{Dia}{1.75}$ or 1.2 m

NOTE Minimum cover shall be the greater value of alternatives shown. The diameter and spans shown in the table to calculate the minimum cover (Example: $\frac{Dia}{1.75}$) are the diameter or span of the facility expressed in number of meters.

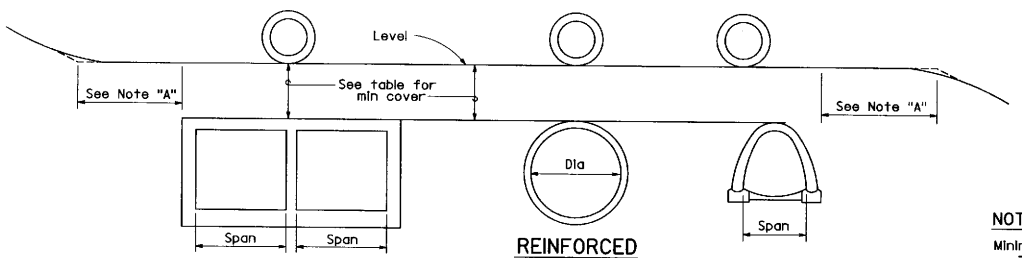

BOX CULVERTS

REINFORCED CONCRETE PIPES, PLASTIC PIPES AND METAL CULVERTS

REINFORCED CONCRETE ARCH CULVERTS

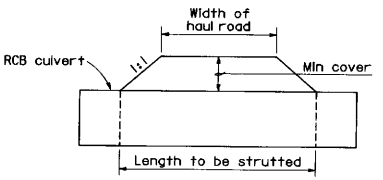

MINIMUM LENGTH OF STRUTTING

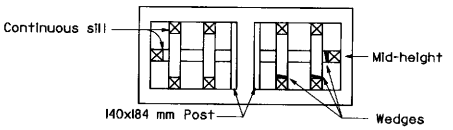

RCB STRUTTING DETAILS

NOTES

Length of strutting to be determined by the Engineer, but shall not be less than as shown in the sketch above.

Assumed tire patterns:

222 kN axle	610x460 mm
334 kN axle	910x610 mm
489 kN axle	910x760 mm
667 kN axle	910x910 mm

Impact = 10%

Sills to be glue-laminated or solid timber.

For strutting requirements of Structural Steel Plate Vehicular Undercrossing, Structural Steel Plate Arches and Structural Steel Plate Pipes during construction, see Standard Plans D88A.

NOTE "A"

Minimum distance equals 3 times the span or 3 times the diameter.

STATE OF CALIFORNIA
DEPARTMENT OF TRANSPORTATION

CONSTRUCTION LOADS ON CULVERT

NO SCALE

ALL DIMENSIONS ARE IN MILLIMETERS UNLESS OTHERWISE SHOWN

D88

STD. PLAN D88

Return to Table of Contents

DIST	COUNTY	ROUTE	KILOMETER POST TOTAL PROJECT	SHEET NO.	TOTAL SHEETS

Caltrans Metric

Paul Cotter
REGISTERED CIVIL ENGINEER

July 1, 1997
PLANS APPROVAL DATE

REGISTERED PROFESSIONAL ENGINEER Paul Cotter No. 34509 Exp. 9-30-99 CIVIL STATE OF CALIFORNIA

The State of California or its officers or agents shall not be responsible for the accuracy or completeness of electronic copies of this plan sheet.

TABLE B

TIMBER STRUTS FOR STRUCTURAL STEEL PLATE VEHICULAR UNDERCROSSING		
SPAN (mm)	STRUT SIZE (mm)	SILL SIZE (mm)
4013 - 4724	89x89	89x140
4800 -5258	89x89	89x184
Over 5258	140x140	140x184

Tabular data in Table B based on 152x51mm corrugations, (Structural steel plate)

TABLE A

TIMBER STRUTS FOR STRUCTURAL STEEL PLATE PIPE			
PIPE DIA (mm)	STRUT SIZE (mm)	HEIGHT OF FILL	
		0 to 6.1 m	GREATER THAN 6.1 m
6100 Thru 6400	184x184	1.5 m SPACING	1.0 m SPACING
	235x235	2.5 m SPACING	1.4 m SPACING

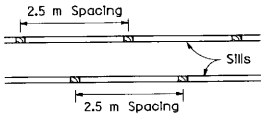

SECTION B-B

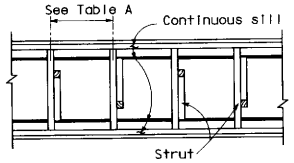

SECTION A-A

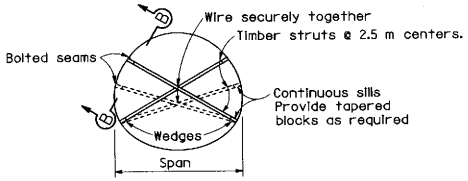

TYPICAL SECTION

STRUCTURAL STEEL PLATE VEHICULAR UNDERCROSSING

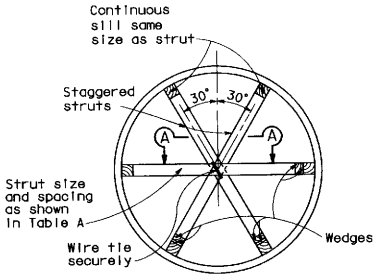

TYPICAL SECTION

STRUCTURAL STEEL PLATE PIPES

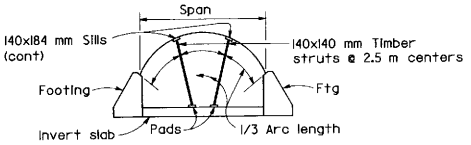

TYPICAL SECTION

STRUCTURAL STEEL PLATE ARCHES

Struts required when span of structural steel plate arch exceeds 5.5 m. Pad size as directed by Engineer.

NOTES

1. Struts shown are minimum required during construction and are for earth loads only.
2. Backfill shall be brought up uniformly on both sides of the structure.
3. For minimum cover over structure for construction loads, see Standard Plan D88.

STATE OF CALIFORNIA
DEPARTMENT OF TRANSPORTATION

STRUT DETAILS FOR STRUCTURAL STEEL PIPES, ARCHES AND VEHICLAR UNDERCROSSING

NO SCALE

ALL DIMENSIONS ARE IN MILLIMETERS UNLESS OTHERWISE SHOWN

D88A

STD. PLAN D88A

Return to Table of Contents

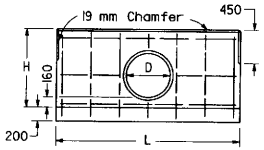

FRONT ELEVATION
SINGLE HEADWALL

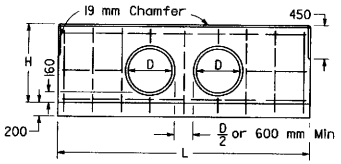

FRONT ELEVATION
DOUBLE HEADWALL

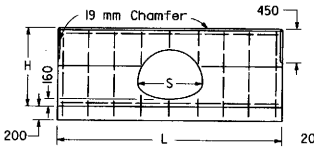

FRONT ELEVATION
SINGLE HEADWALL

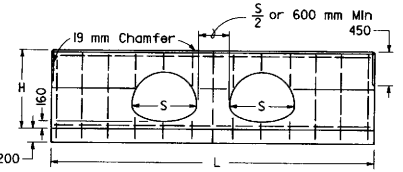

FRONT ELEVATION
DOUBLE HEADWALL

D	H	SINGLE			DOUBLE		
		L	Steel	Conc	L	Steel	Conc
mm	mm	mm	kg	m^3	mm	kg	m^3
300	810	1500	16	0.45	2500	24	0.74
375	885	1800	18	0.56	2950	28	0.91
450	960	2100	22	0.68	3250	34	1.04
525	1035	2250	26	0.76	3550	40	1.18
600	1110	2550	34	0.90	3850	46	1.32
675	1185	2850	38	1.04	4300	52	1.53
750	1260	3000	40	1.13	4600	54	1.69
825	1335	3300	44	1.29	4900	58	1.86
900	1410	3600	46	1.46	5200	66	2.03
975	1485	3750	58	1.57	5500	78	2.21
1050	1560	4050	62	1.75	5800	84	2.39
1125	1635	4350	66	1.94	6100	88	2.58
1200	1710	4500	70	2.06	6400	90	2.78
1275	1785	4800	80	2.26	6850	102	3.06
1350	1860	5100	84	2.47	7150	108	3.27

STRAIGHT HEADWALLS

Omit rounding for pipes less than 1200 mm diameter

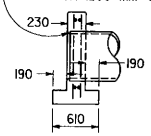

SECTION, SINGLE & DOUBLE HEADWALLS

CMP ARCH SIZE	SINGLE				DOUBLE		
	H	L	Steel	Conc	L	Steel	Conc
mm	mm	mm	kg	m^3	mm	kg	m^3
530x380	885	2000	20	0.61	3000	28	0.91
610x460	960	2300	22	0.74	3500	32	1.10
710x510	1010	2600	28	0.85	4100	40	1.32
885x610	1110	3200	38	1.11	4700	54	1.58
1060x740	1235	3800	50	1.40	5500	66	1.95
1240x840	1335	4400	58	1.70	6400	78	2.37
1440x970	1460	5200	70	2.13	7450	96	2.91
1620x1100	1585	5800	80	2.50	8200	104	3.36
1800x1200	1685	6400	88	2.89	9100	116	3.88

STRAIGHT HEADWALLS

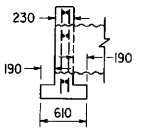

SECTION, SINGLE & DOUBLE HEADWALLS

NOTES

1. No deduction made in quantities for thickness of pipe walls.
2. All reinforcing steel #13 bars. All vertical and horizontal tie bars 450 mm maximum spacing.
3. Length of wall "W" may be varied to suit conditions encountered in the field, and straight line interpolation may be used to calculate quantities.
4. Quantities are for design purposes only.

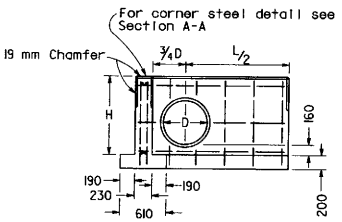

FRONT ELEVATION "L" HEADWALL

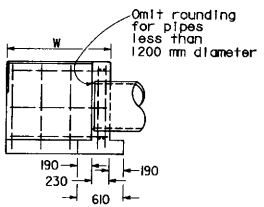

SECTION "L" HEADWALL

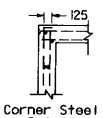

SECTION A-A

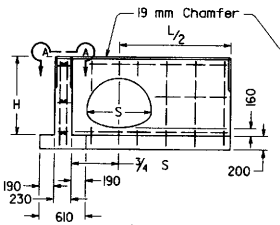

FRONT ELEVATION
"L" HEADWALL

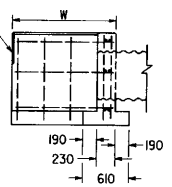

SECTION "L"
HEADWALL

D	H	L/2	LENGTH OF W									
			1000		1450		1900		2350		2800	
			Steel	Conc	Steel	Conc	Steel	Conc	Steel	Conc	Steel	Conc
mm	mm	mm	kg	m^3	kg	m^3	kg	m^3	kg	m^3	kg	m^3
300	810	750	22	0.59	26	0.73	—	—	—	—	—	—
375	885	900	24	0.68	28	0.83	—	—	—	—	—	—
450	960	1050	28	0.78	32	0.94	—	—	—	—	—	—
525	1035	1125	32	0.86	40	1.02	—	—	—	—	—	—
600	1110	1275	38	0.96	44	1.13	48	1.30	—	—	—	—
675	1185	1425	40	1.07	46	1.25	50	1.43	—	—	—	—
750	1260	1500	42	1.16	48	1.34	52	1.53	60	1.72	—	—
825	1335	1650	46	1.28	52	1.47	60	1.67	66	1.86	—	—
900	1410	1800	48	1.40	54	1.61	62	1.81	68	2.01	74	2.21
975	1485	1875	—	—	66	1.71	74	1.92	80	2.13	88	2.33
1050	1560	2025	—	—	68	1.85	76	2.07	84	2.28	92	2.50
1125	1635	2175	—	—	—	—	78	2.22	88	2.45	94	2.67
1200	1710	2250	—	—	—	—	84	2.34	94	2.57	100	2.81
1275	1785	2400	—	—	—	—	—	—	96	2.75	102	2.98
1350	1860	2550	—	—	—	—	—	—	102	2.92	110	3.17

"L" HEADWALLS

CIRCULAR PIPE CULVERT HEADWALLS

CMP ARCH SIZE	H	LENGTH OF W										
		L/2	1000		1450		1900		2350		2800	
			Steel	Conc	Steel	Conc	Steel	Conc	Steel	Conc	Steel	Conc
mm	mm	mm	kg	m^3	kg	m^3	kg	m^3	kg	m^3	kg	m^3
530x380	885	1000	26	0.74	30	0.89	34	1.04	40	1.18	44	1.33
610x460	960	1150	28	0.84	32	1.00	36	1.15	42	1.30	50	1.46
710x510	1010	1300	32	0.93	36	1.09	40	1.25	44	1.41	52	1.57
885x610	1110	1600	44	1.13	50	1.30	54	1.47	62	1.64	70	1.81
1060x740	1235	1900	52	1.36	58	1.54	62	1.72	70	1.90	76	2.09
1240x840	1335	2200	58	1.58	64	1.77	70	1.96	76	2.16	82	2.35
1440x970	1460	2600	64	1.89	72	2.09	78	2.30	84	2.51	92	2.71
1620x1100	1585	2900	84	2.16	90	2.38	96	2.60	104	2.82	112	3.04
1800x1200	1685	3200	90	2.44	96	2.66	104	2.89	112	3.12	120	3.35

"L" HEADWALLS

CORRUGATED METAL PIPE ARCH CULVERT HEADWALLS

DIST	COUNTY	ROUTE	KILOMETER POST TOTAL PROJECT	SHEET NO.	TOTAL SHEETS

REGISTERED CIVIL ENGINEER

July 1, 1997
PLANS APPROVAL DATE

REGISTERED PROFESSIONAL ENGINEER Glenn DeCou No. C34547 Exp. 9-30-99 CIVIL STATE OF CALIFORNIA

The State of California or its officers or agents shall not be responsible for the accuracy or completeness of electronic copies of this plan sheet.

STATE OF CALIFORNIA
DEPARTMENT OF TRANSPORTATION

PIPE HEADWALLS

NO SCALE

ALL DIMENSIONS ARE IN MILLIMETERS UNLESS OTHERWISE SHOWN

D89

STD. PLAN D89

Return to Table of Contents

DIST	COUNTY	ROUTE	KILOMETER POST TOTAL PROJECT	SHEET NO.	TOTAL SHEETS

Caltrans Metric

Paul Cotter
REGISTERED CIVIL ENGINEER

July 1, 1997
PLANS APPROVAL DATE

REGISTERED PROFESSIONAL ENGINEER — Paul Cotter No. 34509 Exp. 9-30-99 CIVIL — STATE OF CALIFORNIA

The State of California or its officers or agents shall not be responsible for the accuracy or completeness of electronic copies of this plan sheet.

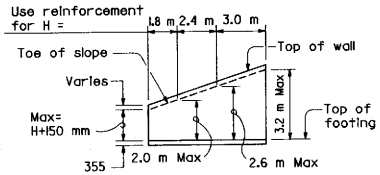

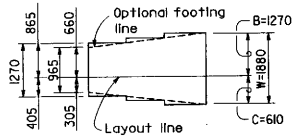

TYPICAL LAYOUT EXAMPLE

Number above "b" & "c" bars indicates distance from top of footing to upper end of bars. Bar cutoffs may be varied in increments of 150 mm.

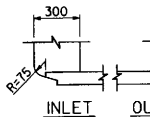

RC PIPE DETAILS

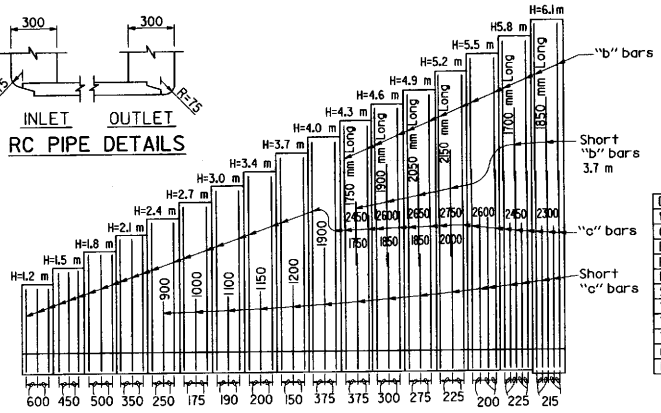

REINFORCED CONCRETE WINGWALLS

Design "H"	1.2 m	1.5 m	1.8 m	2.1 m	2.4 m	2.7 m	3.0 m	3.4 m	3.7 m	4.0 m	4.3 m	4.6 m	4.9 m	5.2 m	5.5 m	5.8 m	6.1 m
W (mm)	965	1120	1270	1420	1575	1730	1880	2030	2185	2335	2440	2640	2845	3050	3250	3455	3660
C (mm)	305	355	405	455	510	560	610	660	710	760	815	915	1015	1120	1220	1320	1425
B (mm)	660	765	865	965	1065	1170	1270	1370	1475	1575	1625	1725	1830	1930	2030	2135	2235
F (mm)	355																405
Batter	None									4:100							
S (mm)	305									470	480	490	500	520	530	550	560
"b" bars	None										#16@375	#16@300	#16@275	#16@225	#19@600	#19@450	#22@430
"c" bars	#13@600	#13@450	#16@500	#16@350	#16@250	#16@175	#19@190	#22@200	#22@150	#29@375	#32@375	#32@300	#32@275	#32@225	#32@200	#36@225	#36@215
"d" bars	#13@600	#13@450	#16@500	#16@350	#16@250	#19@350	#22@380	25@400	#22@300	#25@375	#29@375	#29@300	#29@275	#29@225	#29@200	#32@225	#32@215
Conc m3/m	0.80	0.95	1.10	1.23	1.38	1.53	1.68	1.83	1.98	2.56	2.76	2.96	3.16	3.41	3.64	3.89	4.31
Reinf kg/m	19	24	28	37	45	55	73	92	113	109	134	155	183	210	253	281	307

NOTES

Unit Stresses: f_s = 165 MPa, f_c = 9 MPa, n = 10
Maximum Toe Pressure = 144 kPa.
Elevation, length and angle of flare of wings may be varied by the Engineer to suit conditions encountered in the field. Walls designed for 600 mm live load surcharge, 1:1.5 sloping surcharge not to exceed 1.5 m in elevation plus 600 mm live load surcharge, or unlimited 1:2 surcharge. If 1:1.5 slope exceeds 1.5 m, use Type 2 retaining wall. Wall height may be exceeded by 150 mm before going to the next greater "H".

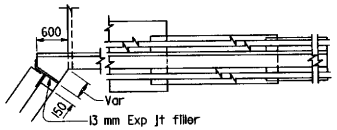

PART PLAN A-A

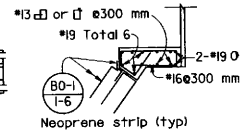

SECTION B-B

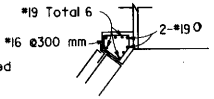

SECTION C-C

If required, slope protection details are shown elsewhere in the road plans, or as directed by the Engineer.

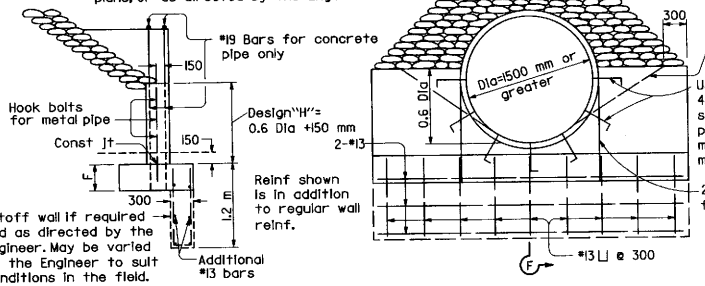

SECTION F-F

TYPE C WALL

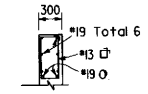

SECTION D-D

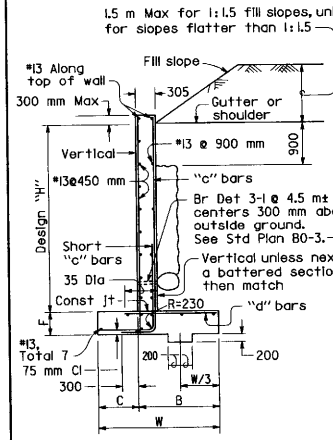

TYPICAL SECTION
H=1.2 m THRU 3.7 m

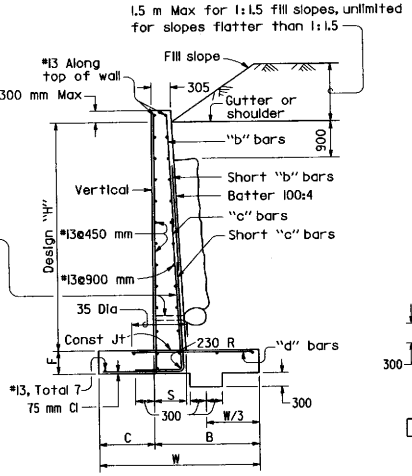

TYPICAL SECTION
H=4.0 m THRU 6.1m

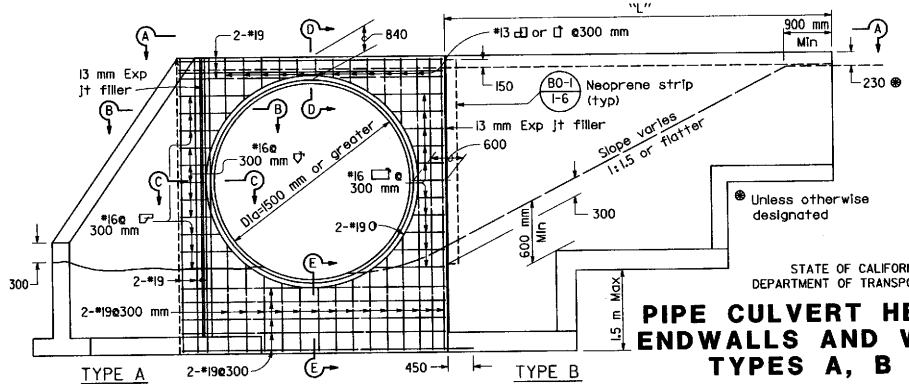

TYPE A

END ELEVATION
STRAIGHT WINGWALLS

TYPE B

For footing step dimensions and reinforcement see "Footing Step" on Std Plan B3-8.

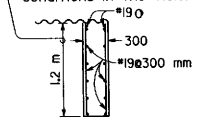

SECTION E-E

STATE OF CALIFORNIA
DEPARTMENT OF TRANSPORTATION

PIPE CULVERT HEADWALLS, ENDWALLS AND WINGWALLS TYPES A, B AND C

NO SCALE

ALL DIMENSIONS ARE IN MILLIMETERS UNLESS OTHERWISE SHOWN

D90

STD. PLAN D90

Return to Table of Contents

DIST	COUNTY	ROUTE	KILOMETER POST TOTAL PROJECT	SHEET NO.	TOTAL SHEETS

REGISTERED CIVIL ENGINEER

July 1, 1997
PLANS APPROVAL DATE

REGISTERED PROFESSIONAL ENGINEER Glenn DeCou No. C34547 Exp. 9-30-99 CIVIL STATE OF CALIFORNIA

The State of California or its officers or agents shall not be responsible for the accuracy or completeness of electronic copies of this plan sheet.

California Metric

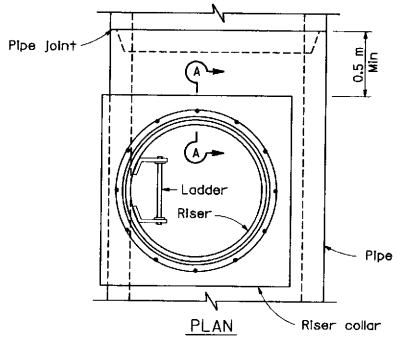

PLAN

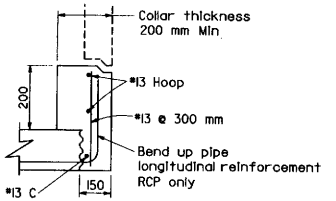

SECTION A-A

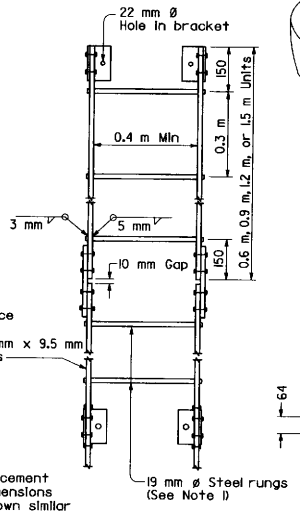

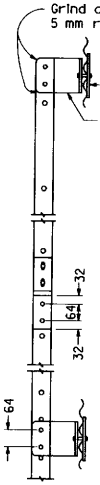

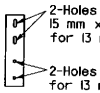

LADDER SPLICE PLATE
64 mm x 9.5 mm x 0.25 m
See Note 4

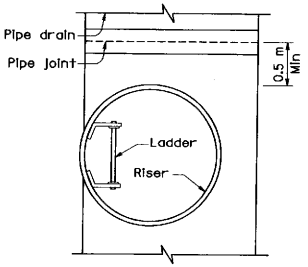

PLAN

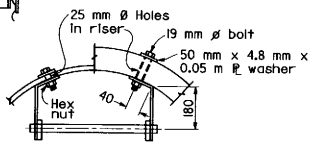

LADDER CONNECTION TO RISER

LADDER DETAILS
See Notes 2, 3 and 7

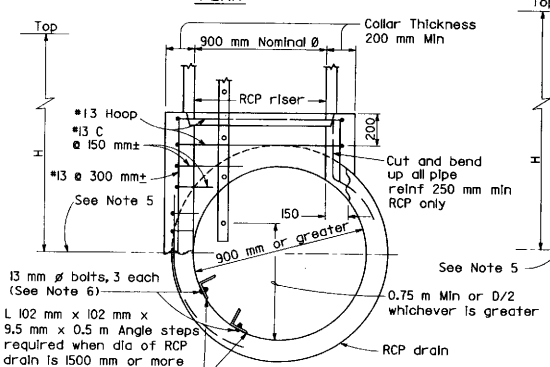

WITH 900 mm RCP RISER

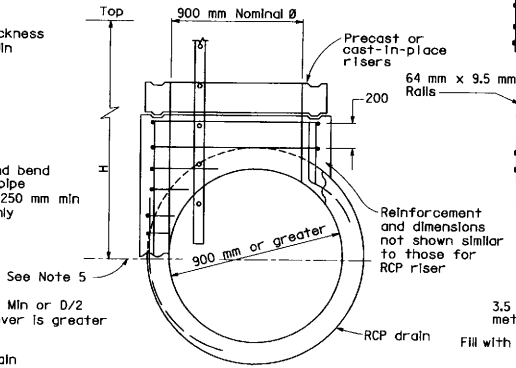

WITH 900 mm PRECAST RISERS

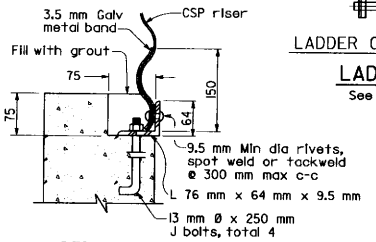

DETAIL A

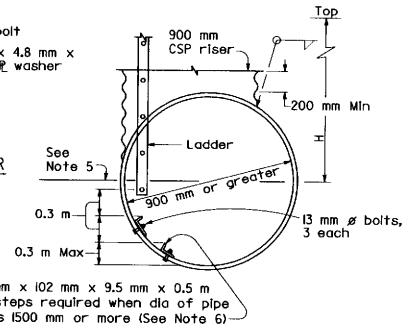

WITH 900 mm CSP RISER

CORRUGATED STEEL PIPE OR STRUCTURAL PLATE PIPE DRAIN

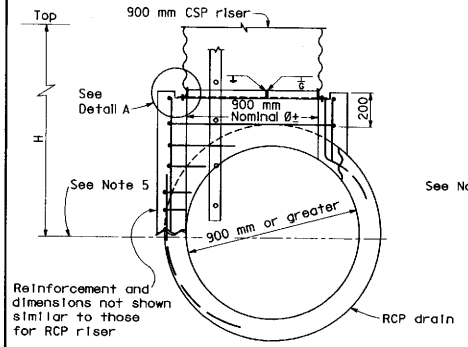

WITH 900 mm CSP RISER

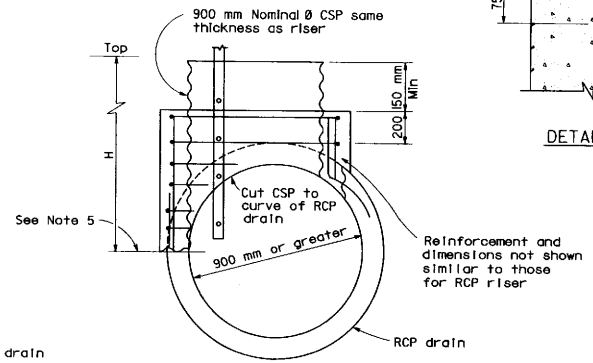

WITH 900 mm CSP RISER
ALTERNATIVE COLLAR DETAIL

REINFORCED CONCRETE PIPE DRAIN

NOTES

1. Galvanizing: See Standard Specifications or Special Provisions. All hardware to be galvanized after fabrication.
2. Ladder may be constructed in one length at contractor's option on reinforced concrete pipe risers.
3. On corrugated steel pipe riser, connect ladder splice plate so joint can compress 10 mm.
4. Ladder splice plate to be connected with 13 mm Ø bolts with double nuts.
5. Pay limit for 900 mm risers to centerline of cross pipe.
6. Where angle steps are required, the lowest angle shall not be more than 0.3 m above the flowline of the drain. The distance between angle steps and between the uppermost angle step and the lowest rung of the ladder shall not exceed 0.3 m. Power driven fasteners, equivalent to the 13 mm Ø bolts shown, may be used for fixing the angle steps to the wall of the reinforced concrete pipe drain.
7. Install ladder so that the highest rung is not more than 0.3 m below the top of the riser.

STATE OF CALIFORNIA
DEPARTMENT OF TRANSPORTATION

PIPE RISER CONNECTIONS

NO SCALE

ALL DIMENSIONS ARE IN MILLIMETERS UNLESS OTHERWISE SHOWN

D93A

STD. PLAN D93A

Return to Table of Contents

DIST	COUNTY	ROUTE	KILOMETER POST TOTAL PROJECT	SHEET NO.	TOTAL SHEETS

Metric

REGISTERED CIVIL ENGINEER

July 1, 1997
PLANS APPROVAL DATE

REGISTERED PROFESSIONAL ENGINEER
Glenn DeCou
No. C34547
Exp. 9-30-99
CIVIL
STATE OF CALIFORNIA

The State of California or its officers or agents shall not be responsible for the accuracy or completeness of electronic copies of this plan sheet.

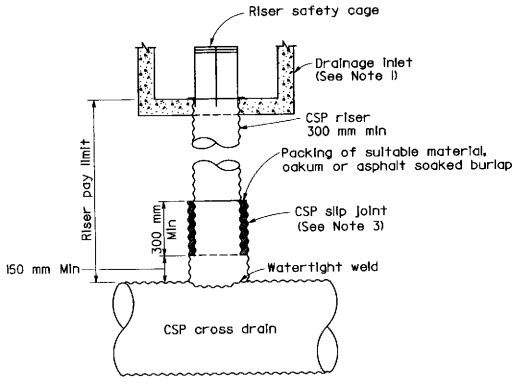

CSP RISER FOR DRAINAGE INLET

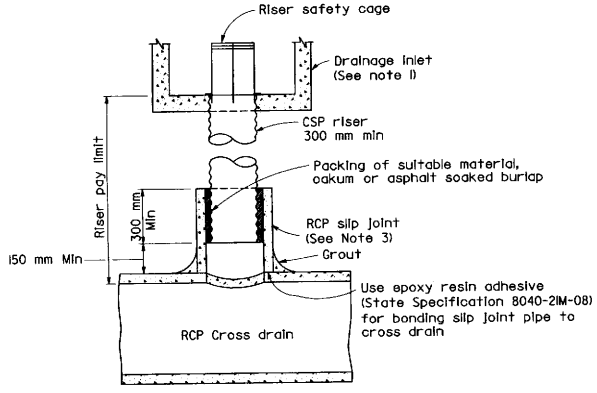

CSP RISER FOR DRAINAGE INLET

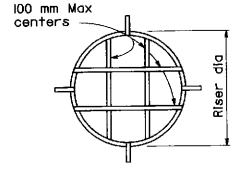

PLAN

*10 Bars throughout with welded joints

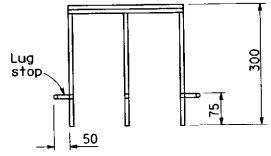

ELEVATION

RISER SAFETY CAGE DETAIL

NOTES

1. Structure at top of riser may be any standard drainage inlet or pipe inlet
2. Galvanizing: See Standard Specifications or Special Provision.
3. Diameter of slip joint to be 75 mm greater than diameter of riser.

STATE OF CALIFORNIA
DEPARTMENT OF TRANSPORTATION

DRAINAGE INLET RISER CONNECTIONS

NO SCALE

ALL DIMENSIONS ARE IN MILLIMETERS UNLESS OTHERWISE SHOWN

D93B

STD. PLAN D93B

Return to Table of Contents

DIST	COUNTY	ROUTE	KILOMETER POST TOTAL PROJECT	SHEET NO.	TOTAL SHEETS

REGISTERED CIVIL ENGINEER

July 1, 1997
PLANS APPROVAL DATE

Glenn DeCou No. C34547 Exp. 9-30-99 CIVIL STATE OF CALIFORNIA REGISTERED PROFESSIONAL ENGINEER

The State of California or its officers or agents shall not be responsible for the accuracy or completeness of electronic copies of this plan sheet.

California Metric

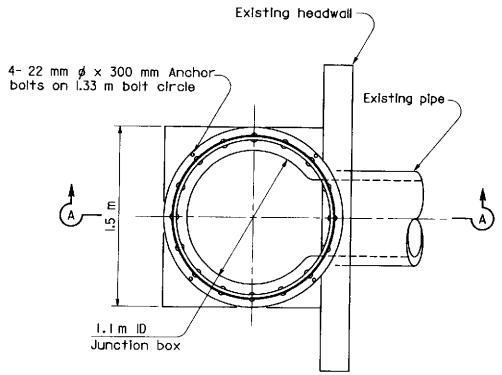

PLAN

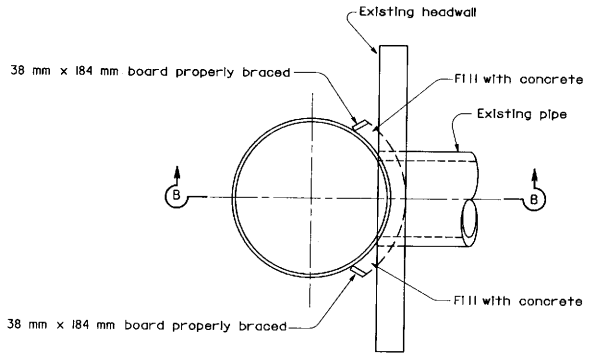

PLAN

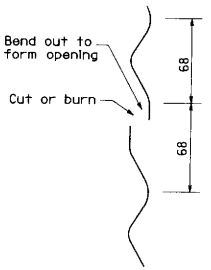

DETAIL A

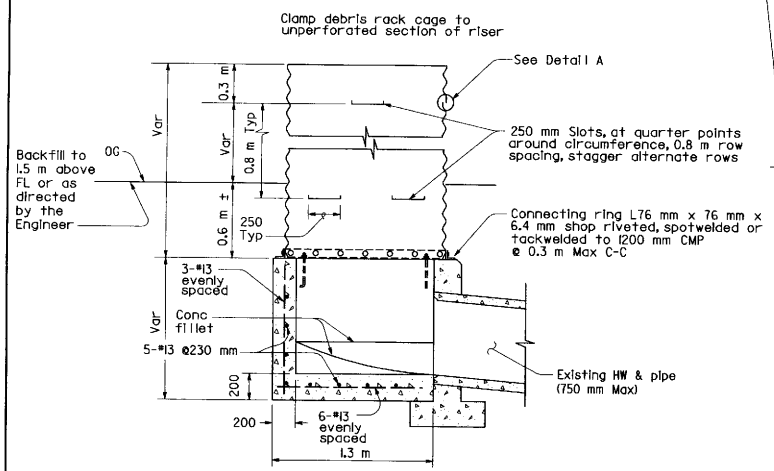

SECTION A-A

CMP RISER

AND JUNCTION BOX

TYPE A

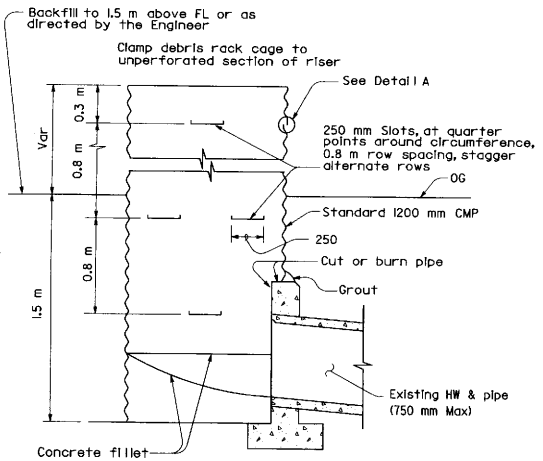

SECTION B-B

CMP RISER

TYPE B

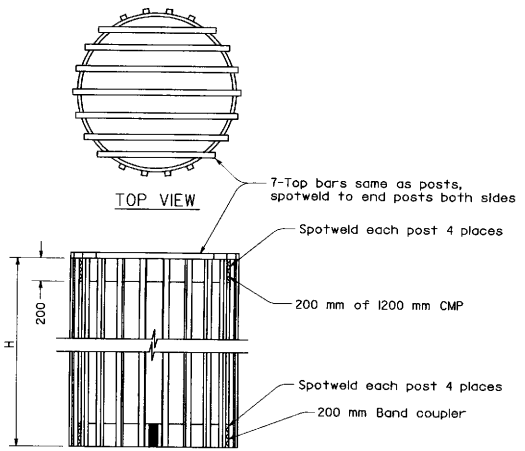

H = 22 Posts- 1.8 m or 2.4 m lengths use 50 mm pipe or ∟51mm x 51mm x 4.8 mm (Galvanized steel or aluminum)

DEBRIS RACK CAGE

STATE OF CALIFORNIA
DEPARTMENT OF TRANSPORTATION

PIPE RISER WITH DEBRIS RACK CAGE

NO SCALE

ALL DIMENSIONS ARE IN MILLIMETERS UNLESS OTHERWISE SHOWN

D93C

STD. PLAN D93C

Return to Table of Contents

DIST	COUNTY	ROUTE	KILOMETER POST TOTAL PROJECT	SHEET NO.	TOTAL SHEETS

Caltrans Metric

REGISTERED CIVIL ENGINEER

July 1, 1997
PLANS APPROVAL DATE

REGISTERED PROFESSIONAL ENGINEER Glenn DeCou No. C34547 Exp. 9-30-99 CIVIL STATE OF CALIFORNIA

The State of California or its officers or agents shall not be responsible for the accuracy or completeness of electronic copies of this plan sheet.

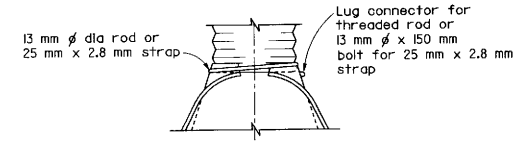

TYPE I

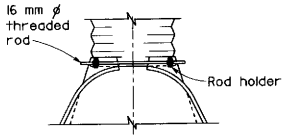

TYPE II

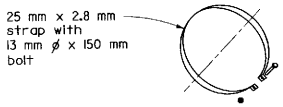

CONNECTOR STRAP DETAIL

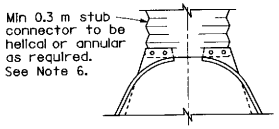

TYPE III

ALTERNATIVE CONNECTIONS FOR PIPE TO METAL FLARED END SECTIONS

See Note 7

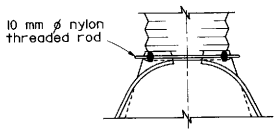

TYPE A
300 mm - 600 mm

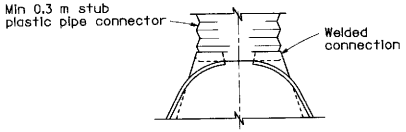

TYPE B
750 mm - 900 mm

ALTERNATIVE CONNECTIONS FOR PIPE TO PLASTIC FLARED END SECTIONS

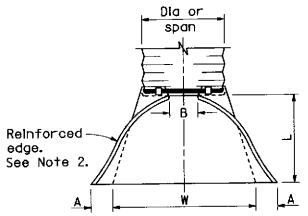

PLAN

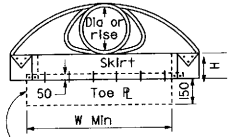

ELEVATION

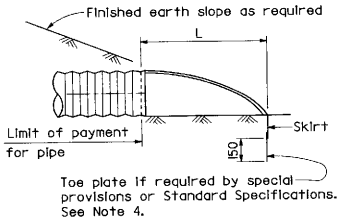

TYPICAL CROSS-SECTION

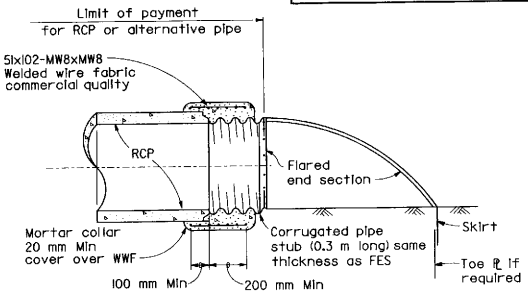

FLARED END SECTION CONNECTION TO RCP

NOTES

1. All 3-piece bodies to have 2.8 mm thick sides and 3.5 mm thick center panels. Width of center panels to be greater than 20% of the pipe periphery. Multiple panel bodies to have lap seams which are to be tightly joined by rivets or bolts.
2. Reinforced edges to be supplemented with stiffener angles for the 1500 mm thru 2100 mm round, 1925 mm x 1300 mm and 2075 mm x 1425 mm pipe-arch sizes. The angles will be 51mm x 51mm x 6.4 mm for the 1500 mm thru 1800 mm round, 1925 mm x 1300 mm and 2075 mm x 1425 mm pipe-arch sizes and 64 mm x 64 mm x 6.4 mm for 1950 mm and 2100 mm round. The angles to be attached by 10 mm ø nuts and bolts.
3. Angle reinforcement shall be placed under the center panel seams on the 1925 mm x 1300 mm and 2075 mm x 1425 mm pipe-arch sizes.
4. Toe plate to be available as an accessory when specified.
5. End of pipe to be finished with annular corrugations to conform flared end section so that minimal leakage results from the connection. Other designs may be used with approval of the Engineer.
6. For 300 mm thru 600 mm helical end section connection, a universal coupling band attached to the metal end section by rivets, bolts or 25 mm long shop tack welds spaced at same intervals as dimples may be used in place of the 0.3 m stub. See Standard Plan D97C.
7. The types of alternative connections for pipe to metal flared end sections shall conform to the following:

CIRCULAR PIPES -
300 mm thru 600 mm Type I or III
750 mm thru 2100 mm Type II or III

PIPE-ARCHES -
525 mm x 375 mm thru 1425 mm x 950 mm Type II or III
1600 mm x 1075 mm thru 2075 mm x 1425 mm Type III

CIRCULAR PIPES						
PIPE DIA (mm)	END SECTION THICKNESS (mm)	DIMENSION-MILLIMETERS				
		A	B	H	L	W
		25 mm±	Max	25 mm±	40 mm±	50 mm±
300*	1.6	150	150	150	530	610
375*	1.6	180	200	150	660	760
450*	1.6	200	250	150	790	910
525	1.6	230	300	150	910	1070
600*	1.6	250	330	150	1040	1220
750*	2.0	300	410	200	1300	1520
900*	2.0	360	480	230	1520	1830
1050	2.8	410	560	280	1750	2130
1200	2.8	460	690	300	1980	2290
1350	2.8	460	760	300	2130	2590
1500	2.8	460	840	300	2210	2900
1650	2.8	460	910	300	2210	3050
1800	2.8	460	990	300	2210	3200
1950	2.8	460	1070	300	2210	3350
2100	2.8	460	1140	300	2210	3510

*Equivalent plastic FES to meet AASHTO M-294 and ASTM D-1248 Specifications, and shall conform to all dimensions shown above except for end section thickness, which may be 0.1mm thinner.

PIPE-ARCHES							
DESIGNATION (mm)		END SECTION THICKNESS (mm)	DIMENSION-MILLIMETERS				
			A	B	H	L	W
SPAN	RISE		25 mm±	Max	25 mm±	40 mm±	50 mm±
525	375	1.6	180	250	150	580	910
600	450	1.6	200	300	150	710	1070
700	500	1.6	230	360	150	810	1220
875	600	2.0	250	410	150	990	1520
1050	725	2.0	300	460	200	1170	1910
1225	825	2.8	330	530	230	1350	2160
1425	950	2.8	460	660	300	1600	2290
1600	1075	2.8	460	760	300	1780	2590
1775	1175	2.8	460	840	300	1960	2900
1925	1300	2.8	460	910	300	1960	3200
2075	1425	2.8	460	990	300	1960	3510

FLARED END SECTIONS FOR CORRUGATED METAL AND PLASTIC PIPE CULVERTS

STATE OF CALIFORNIA
DEPARTMENT OF TRANSPORTATION

METAL AND PLASTIC FLARED END SECTIONS

NO SCALE

ALL DIMENSIONS ARE IN MILLIMETERS UNLESS OTHERWISE SHOWN

D94A

STD. PLAN D94A

Return to Table of Contents

DIST	COUNTY	ROUTE	KILOMETER POST TOTAL PROJECT	SHEET NO.	TOTAL SHEETS

California Metric

REGISTERED CIVIL ENGINEER

July 1, 1997
PLANS APPROVAL DATE

Glenn DeCou
No. C34547
Exp. 9-30-99
CIVIL
STATE OF CALIFORNIA
REGISTERED PROFESSIONAL ENGINEER

The State of California or its officers or agents shall not be responsible for the accuracy or completeness of electronic copies of this plan sheet.

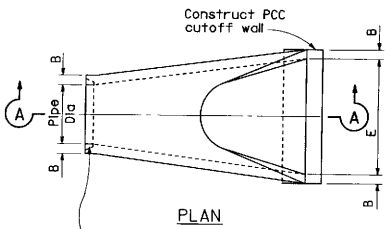

PLAN

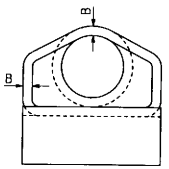

END VIEW

Tongue end on inlet section
Groove end on outlet section

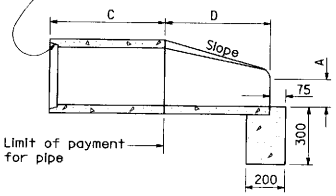

SECTION A-A

MINIMUM DIMENSIONS						
PIPE DIA	A	B	C	D	E	SLOPE
300	100	45	See Note 2	600	600	1:2 or flatter
450	225	58		675	910	
600	240	70		1100	1210	
750	300	83		1370	1520	
900	375	95		1600	1820	
1050	525	107		1600	1980	
1200	600	119		1820	2130	
1350	675	131		1650	2280	

PRECAST CONCRETE FLARED END SECTION TYPE A

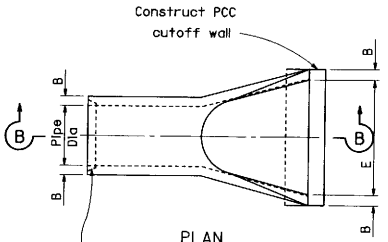

PLAN

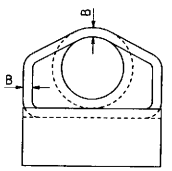

END VIEW

Tongue end on inlet section.
Groove end on outlet section

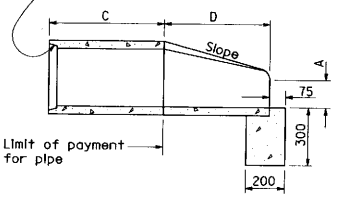

SECTION B-B

MINIMUM DIMENSIONS						
PIPE DIA	A	B	C	D	E	SLOPE
300	100	39	See Note 2	550	600	1:2 or flatter
450	225	45		630	910	
600	240	58		1060	1210	
750	300	71		1340	1520	
900	375	81		1570	1820	
1050	525	90		1600	1980	
1200	600	103		1820	2130	
1350	675	112		1670	2080	

PRECAST CONCRETE FLARED END SECTION TYPE B

NOTES

1. Contractor has the option of using either Type A or B precast concrete flared end section.
2. C dimension varies by manufacturer and will be paid for as concrete pipe.

STATE OF CALIFORNIA
DEPARTMENT OF TRANSPORTATION

CONCRETE FLARED END SECTIONS

NO SCALE

ALL DIMENSIONS ARE IN MILLIMETERS UNLESS OTHERWISE SHOWN

D94B

STD. PLAN D94B

Return to Table of Contents

DIST	COUNTY	ROUTE	KILOMETER POST TOTAL PROJECT	SHEET NO.	TOTAL SHEETS

Caltrans Metric

Paul Cotter
REGISTERED CIVIL ENGINEER

July 1, 1997
PLANS APPROVAL DATE

REGISTERED PROFESSIONAL ENGINEER Paul Cotter No. 34509 Exp. 9-30-99 CIVIL STATE OF CALIFORNIA

The State of California or its officers or agents shall not be responsible for the accuracy or completeness of electronic copies of this plan sheet.

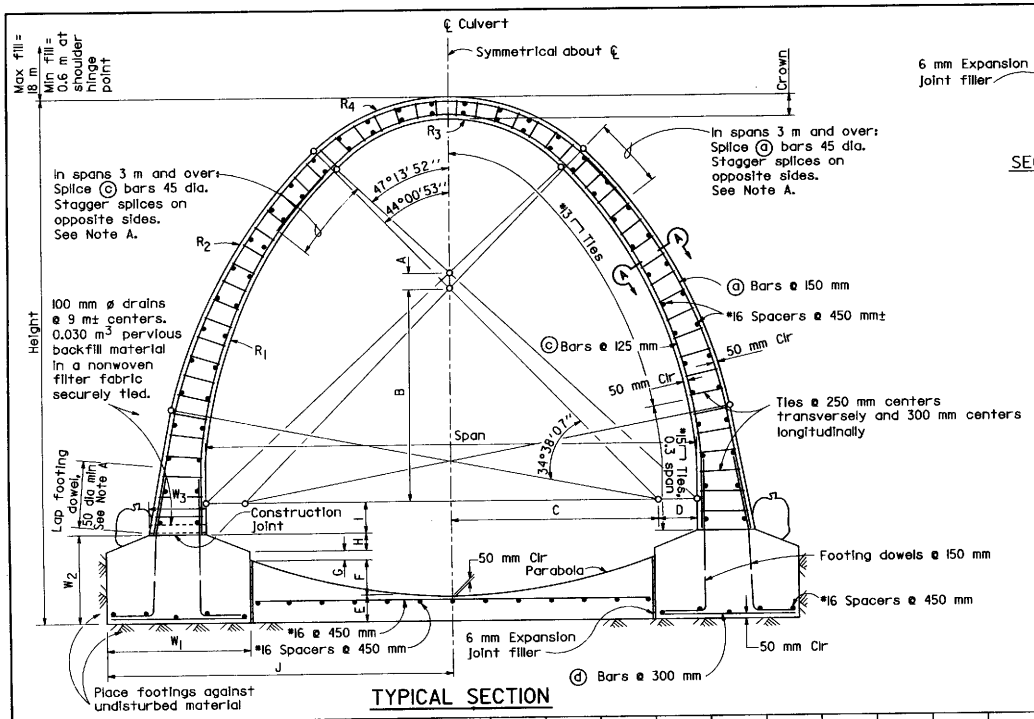

TYPICAL SECTION

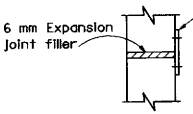

1.3 mm galvanized flashing 450 mm wide at expansion joints. Tack to concrete to prevent movement during backfilling.

Place expansion joints in arch rib only at 9 m± centers. None in footings and invert slab.

SECTION A-A

FOOTING PRESSURE																		
Span (meter)		1.8	2.1	2.4	2.7	3.0	3.4	3.7	4.0	4.3	4.6	4.9	5.2	5.5	5.8	6.1	6.4	6.7
Footing Pressure Kilopascal (kPa)	Fill 6 m	230	230	240	240	250	260	270	270	290	290	290	300	310	310	320	330	340
	12 m	400	410	420	430	440	450	460	460	480	480	480	490	500	500	510	520	530
	18 m	580	600	600	620	630	640	650	650	670	670	670	680	690	690	700	710	720

NOTES

DESIGN:
Bridge Design Specifications (1983 AASHTO Specifications with revisions by Caltrans).

EARTH LOADING:
Earth Densities - 2240 kg/m³ vert, 2240 kg/m³ horiz
- 2240 kg/m³ vert, 670 kg/m³ horiz

UNIT STRESSES:
F_y = 400 MPa
F'_c = 22.5 MPa

SPECIAL COVERAGE:
This Standard Plan is not to be used for culverts in a corrosive environment or where there is a severe abrasive flow condition.

LOAD FACTORS:
1.5D+1.5E+2.5L, capacity modification factor = 1.00

NOTE A

If lap splicing is used, main reinforcement shall be placed so that in any 4 adjacent bars, no two bars are spliced at the same level. Splice levels shall be separated a minimum of 300 mm measured in the circumferential direction.

MAXIMUM OVERFILL:
18 m

EXCAVATION AND BACKFILL:
See Standard Plan A62E

Span (Meter)	Waterway Area (m²)	Height (Meter)	Crown (mm)	W1 (mm)	W2 (mm)	W3 (mm)	R1 (mm)	R2 (mm)	R3 (mm)	R4 (mm)	A (mm)	B (mm)	C (mm)	D (mm)	E (mm)	F (mm)	G (mm)	H (mm)	I (mm)	J (mm)	ⓐ Bars	ⓒ Bars	ⓓ Bars	Footing Dowels	Reinf Steel kg/m	Concrete m³/m
1.8	2.5	2.103	152	610	394	279	1829	1889	584	794	57	789	762	152	152	140	38	64	127	1359	#19	#19	#16	#19	302	1.48
2.1	3.4	2.410	152	686	445	295	2134	2178	679	902	70	921	889	178	152	165	51	76	143	1556	#19	#19	#16	#19	330	1.86
2.4	4.5	2.702	152	762	483	314	2438	2470	778	1006	76	1051	1016	203	152	191	51	89	162	1756	#19	#19	#16	#19	369	2.23
2.7	5.7	2.989	152	838	508	337	2743	2759	876	1114	86	1183	1143	229	152	203	51	102	184	1959	#19	#19	#16	#19	397	2.63
3.0	6.9	3.305	162	914	559	356	3048	3058	972	1229	95	1314	1270	254	152	254	51	102	203	2159	#22	#22	#16	#22	595	3.19
3.4	8.5	3.621	168	1016	610	391	3353	3353	1067	1343	108	1446	1397	279	152	254	76	127	222	2380	#22	#22	#16	#22	641	3.66
3.7	10.2	3.921	184	1118	635	432	3658	3658	1168	1464	111	1578	1524	305	152	279	76	127	244	2604	#22	#22	#16	#22	680	4.27
4.0	11.8	4.245	200	1219	686	464	3962	3962	1264	1588	124	1708	1651	330	178	305	76	127	264	2823	#22	#22	#19	#22	750	5.07
4.3	13.7	4.545	213	1295	711	498	4267	4267	1359	1708	137	1840	1778	356	178	305	76	152	286	3031	#22	#22	#19	#22	818	5.67
4.6	15.7	4.867	229	1372	762	533	4572	4572	1457	1829	143	1972	1905	381	178	356	76	152	305	3239	#22	#22	#19	#22	870	6.50
4.9	17.8	5.193	244	1473	813	568	4877	4877	1556	1953	152	2103	2032	406	178	381	76	178	324	3459	#22	#22	#19	#22	917	7.33
5.2	20.2	5.547	260	1575	889	610	5182	5182	1651	2076	165	2235	2159	432	203	406	102	178	346	3683	#25	#25	#19	#25	1184	8.48
5.5	22.7	5.867	279	1651	940	641	5486	5486	1749	2197	168	2365	2286	457	203	432	102	203	365	3889	#25	#25	#19	#25	1248	9.44
5.8	25.2	6.193	289	1740	991	676	5791	5791	1848	2318	181	2497	2413	483	229	457	102	203	387	4104	#25	#25	#19	#25	1347	10.51
6.1	28.0	6.490	305	1829	1016	711	6096	6096	1943	2438	191	2629	2540	508	229	457	102	229	406	4318	#25	#25	#19	#25	1394	11.44
6.4	31.0	6.841	321	1921	1092	746	6401	6401	2042	2562	200	2761	2667	533	229	533	102	229	425	4534	#25	#25	#19	#25	1463	12.77
6.7	33.7	7.118	337	2007	1092	787	6706	6706	2140	2686	210	2892	2794	559	229	533	102	229	448	4750	#25	#25	#19	#25	1518	13.72

STATE OF CALIFORNIA
DEPARTMENT OF TRANSPORTATION

CONCRETE ARCH CULVERTS

NO SCALE

ALL DIMENSIONS ARE IN MILLIMETERS UNLESS OTHERWISE SHOWN

D95

STD. PLAN D95

Return to Table of Contents

DIST	COUNTY	ROUTE	KILOMETER POST TOTAL PROJECT	SHEET NO.	TOTAL SHEETS

Metric

REGISTERED CIVIL ENGINEER

July 1, 1997
PLANS APPROVAL DATE

The State of California or its officers or agents shall not be responsible for the accuracy or completeness of electronic copies of this plan sheet.

REGISTERED PROFESSIONAL ENGINEER Glenn DeCou No. C34547 Exp. 9-30-99 CIVIL STATE OF CALIFORNIA

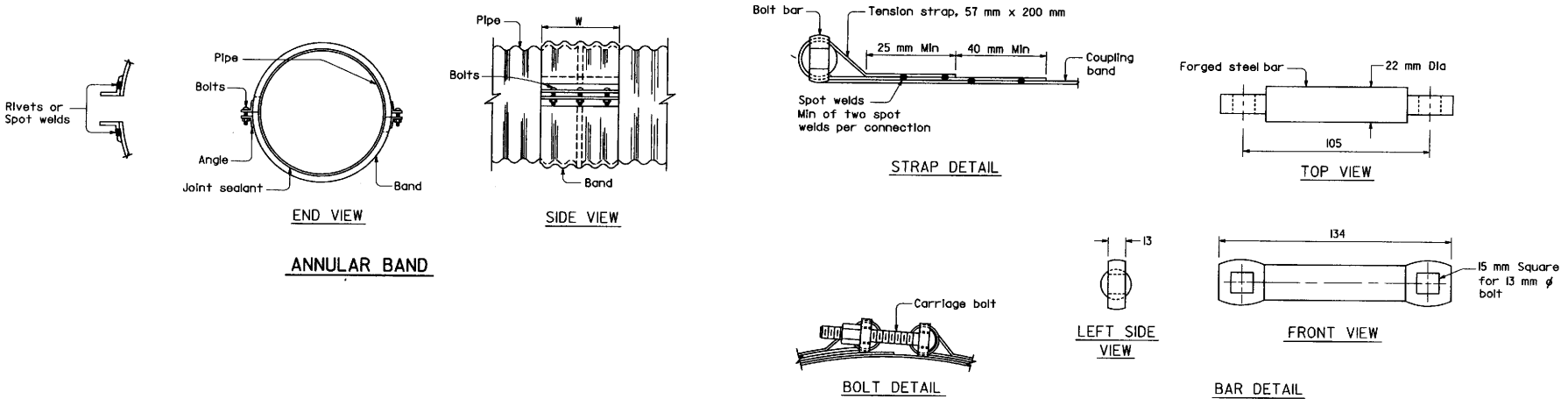

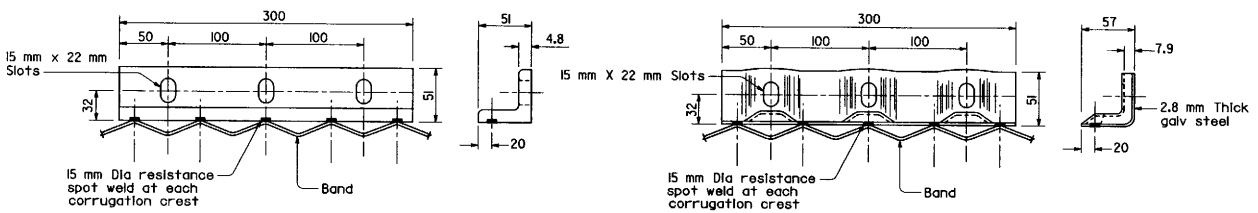

51mm X 51mm X 4.8 mm ANGLE

See tables on Standard Plans D97E, D97F and D97G for width, W=305 mm shown

DIE-FORMED ANGLE

See tables on Standard Plans D97E and D97G for width, W=305 mm shown.

Alternate only for standard joints on pipes through 1800 mm diameter and downdrains through 600 mm diameter.

ANGLE CONNECTORS

NOTES

1. All ferrous metal coupling band connection hardware shall be galvanized or electroplated in accordance with the Standard Specifications.
2. Dimensions and thicknesses shown are minimum.
3. Spot welds shall develop minimum required strength of strap.
4. Fillet welds of equivalent strength may be substituted for spot welds or rivets.

STATE OF CALIFORNIA
DEPARTMENT OF TRANSPORTATION

CORRUGATED METAL PIPE COUPLING DETAILS NO. 1 ANNULAR COUPLING BAND BAR AND STRAP AND ANGLE CONNECTIONS

NO SCALE

ALL DIMENSIONS ARE IN MILLIMETERS UNLESS OTHERWISE SHOWN

D97A

STD. PLAN D97A

Return to Table of Contents

DIST	COUNTY	ROUTE	KILOMETER POST TOTAL PROJECT	SHEET NO.	TOTAL SHEETS

California Metric

REGISTERED CIVIL ENGINEER

July 1, 1997
PLANS APPROVAL DATE

REGISTERED PROFESSIONAL ENGINEER Glenn DeCou No. C34547 Exp. 9-30-99 CIVIL STATE OF CALIFORNIA

The State of California or its officers or agents shall not be responsible for the accuracy or completeness of electronic copies of this plan sheet.

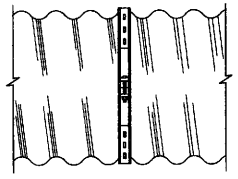

SIDE VIEW

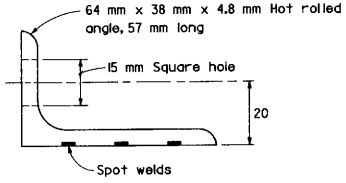

ANGLE

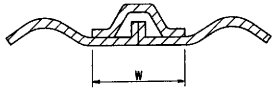

HAT BAND

NOTES

1. All ferrous metal coupling band connection hardware shall be galvanized or electroplated in accordance with the Standard Specifications.
2. Dimensions and thicknesses shown are minimum.
3. Spot welds shall develop minimum required strength of strap.
4. Fillet welds of equivalent strength may be substituted for spot welds or rivets.

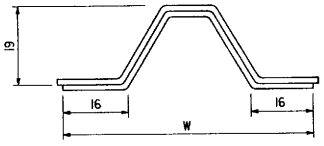

SECTIONAL VIEW

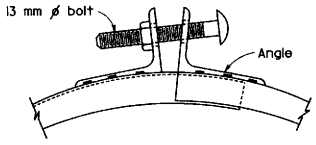

BOLT DETAIL

HAT BAND COUPLER

Angle connector shown

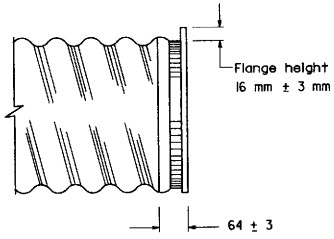

SIDE VIEW

FLANGE DETAILS

Required for Hat band coupler

STATE OF CALIFORNIA
DEPARTMENT OF TRANSPORTATION

CORRUGATED METAL PIPE COUPLING DETAILS NO. 2 HAT BAND COUPLER AND FLANGE DETAILS

NO SCALE

ALL DIMENSIONS ARE IN MILLIMETERS UNLESS OTHERWISE SHOWN

D97B

STD. PLAN D97B

Return to Table of Contents

DIST	COUNTY	ROUTE	KILOMETER POST TOTAL PROJECT	SHEET NO.	TOTAL SHEETS

REGISTERED CIVIL ENGINEER

July 1, 1997
PLANS APPROVAL DATE

Glenn DeCou
No. C34547
Exp. 9-30-99
CIVIL
REGISTERED PROFESSIONAL ENGINEER
STATE OF CALIFORNIA

The State of California or its officers or agents shall not be responsible for the accuracy or completeness of electronic copies of this plan sheet.

Caltrans Metric

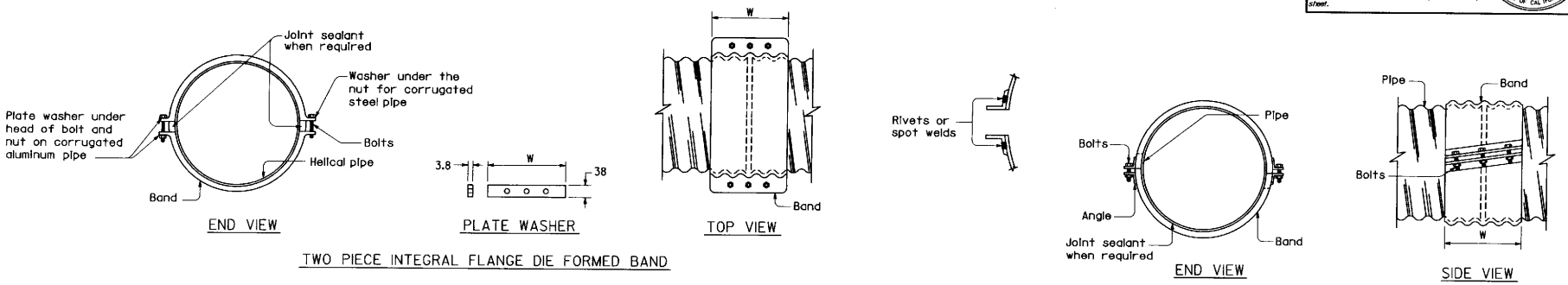

HELICAL COUPLING BANDS

HELICAL BAND

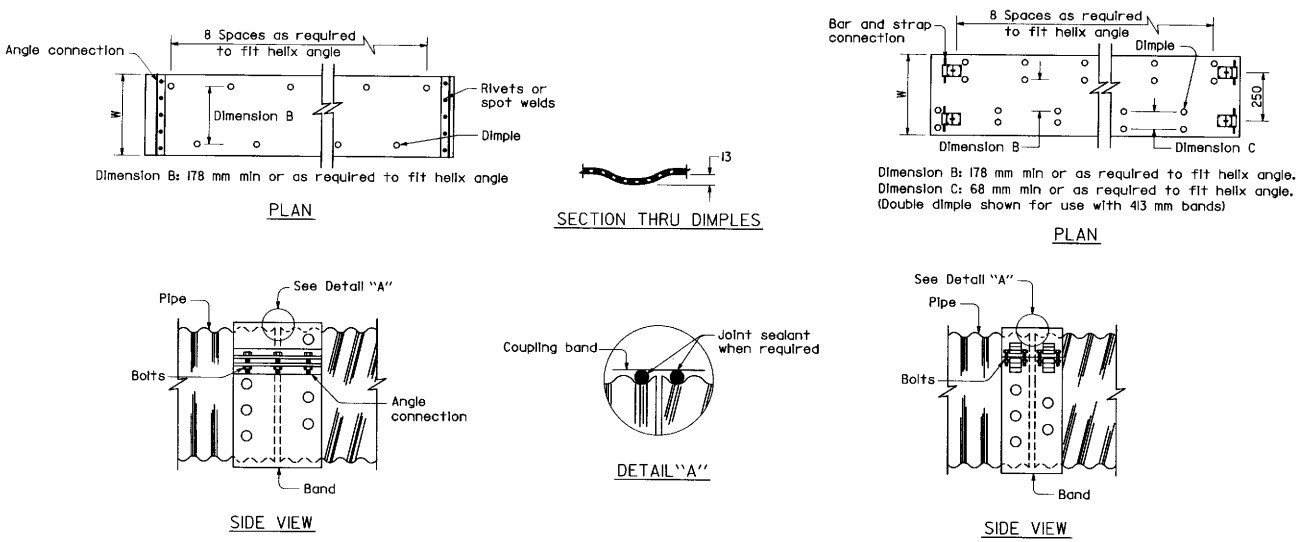

UNIVERSAL COUPLING BANDS

NOTES

1. All ferrous metal coupling band connection hardware shall be galvanized or electroplated in accordance with the Standard specifications.
2. Dimensions and thicknesses shown are minimum.
3. Spot welds shall develop minimum required strength of strap.
4. Fillet welds of equivalent strength may be substituted for spot welds or rivets.

STATE OF CALIFORNIA
DEPARTMENT OF TRANSPORTATION

CORRUGATED METAL PIPE COUPLING DETAILS NO. 3 HELICAL AND UNIVERSAL COUPLERS

NO SCALE

ALL DIMENSIONS ARE IN MILLIMETERS UNLESS OTHERWISE SHOWN

D97C

STD. PLAN D97C

Return to Table of Contents

DIST	COUNTY	ROUTE	KILOMETER POST TOTAL PROJECT	SHEET NO.	TOTAL SHEETS

Metric

REGISTERED CIVIL ENGINEER

July 1, 1997
PLANS APPROVAL DATE

Glenn DeCou No. C34547 Exp. 9-30-99 CIVIL
REGISTERED PROFESSIONAL ENGINEER
STATE OF CALIFORNIA

The State of California or its officers or agents shall not be responsible for the accuracy or completeness of electronic copies of this plan sheet.

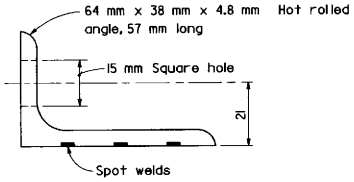

ANGLE

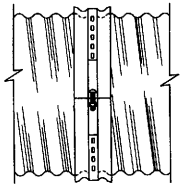

SIDE VIEW
ANGLE

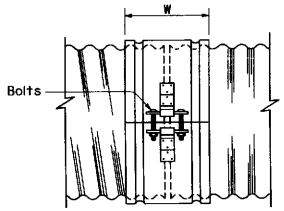

SIDE VIEW
SINGLE BAR AND STRAP

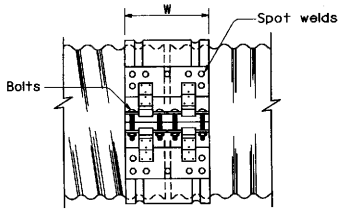

SIDE VIEW
DOUBLE BAR AND STRAP

NOTES

1. All ferrous metal coupling band connection hardware shall be galvanized or electroplated in accordance with the Standard Specifications.
2. Dimensions and thicknesses shown are minimum.
3. Spot welds shall develop minimum required strength of strap.
4. Fillet welds of equivalent strength may be substituted for spot welds or rivets.
5. Dimension depends upon whether end condition is lips up or lips down.

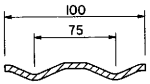

SECTION

H-100 HUGGER BAND

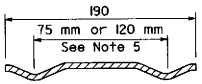

SECTION

H-190 HUGGER BAND

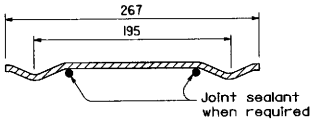

SECTION

H-267 HUGGER BAND

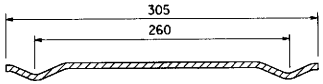

SECTION

H-305 HUGGER BAND

HUGGER COUPLING BANDS

STATE OF CALIFORNIA
DEPARTMENT OF TRANSPORTATION

CORRUGATED METAL PIPE COUPLING DETAILS NO. 4 HUGGER COUPLING BANDS

NO SCALE

ALL DIMENSIONS ARE IN MILLIMETERS UNLESS OTHERWISE SHOWN

D97D

STD. PLAN D97D

Return to Table of Contents

DIST	COUNTY	ROUTE	KILOMETER POST TOTAL PROJECT	SHEET NO.	TOTAL SHEETS

Caltrans Metric

REGISTERED CIVIL ENGINEER

July 1, 1997
PLANS APPROVAL DATE

REGISTERED PROFESSIONAL ENGINEER Glenn DeCou No. C34547 Exp. 9-30-99 CIVIL STATE OF CALIFORNIA

The State of California or its officers or agents shall not be responsible for the accuracy or completeness of electronic copies of this plan sheet.

COUPLING TYPE	PIPE CORRUGATION (mm)	PIPE SIZE (mm)	W OR A (mm)	PIPE WALL THICKNESS CSP (mm)	PIPE WALL THICKNESS CAP (mm)	BAND THICKNESS CSP (mm)	BAND THICKNESS CAP (mm)	BAR AND STRAP (CSP ONLY) STRAP THICKNESS (mm)	BAR AND STRAP (CSP ONLY) BOLTS (mm ø)	BAR AND STRAP (CSP ONLY) BAR DIA (mm)	BAR AND STRAP (CSP ONLY) BAR YIELD STRENGTH (MPa)	ANGLE DIMENSIONS CSP (mm)	ANGLE DIMENSIONS CAP (mm)	ANGLE BOLTS (No.-mm ø) CSP	ANGLE BOLTS (No.-mm ø) CAP	ANGLE RIVETS ANGLE TO BAND CSP	ANGLE RIVETS ANGLE TO BAND CAP	ANGLE SPOT WELDS ANGLE TO BAND CSP
TWO PIECE INTEGRAL FLANGE	38 x 6.5	150 - 250	178	1.32 - 2.01	1.22 - 1.52	1.32	1.52							2-10	2-10			
		300 - 450	178	1.32 - 2.01		1.63								2-13				
	68 x 13	300 - 600	178	1.32 - 2.01	1.52 - 2.67	1.63	1.52							2-13	2-13			
UNIVERSAL	68 x 13	THROUGH 900	305	1.32 - 3.51	1.52 - 3.43	1.32	1.52					51x 51x 4.8	51x 51x 4.8	3-13	3-13	3-9.5 mm	3-9.5 mm	3-15 mm
		1050 - 1500	305	1.32 - 4.27	1.91 - 4.17	1.32	1.52					51x 51x 4.8	51x 51x 4.8	3-13	3-13	3-9.5 mm	3-9.5 mm	5-15 mm
		THROUGH 1800	305	1.32 - 4.27	4.17	1.32	2.67	2.01	13	22	220	51x 51x 4.8	51x 51x 4.8	3-13	3-13	3-9.5 mm	3-9.5 mm	5-15 mm
		1950 - 2100	413	4.27		2.01		DOUBLE 2.01	13	22	220							
ANNULAR	68 x 13	THROUGH 900	178	1.63 - 3.51	1.52 - 3.43	1.32	1.52	2.01	13	22	220	51x 51x 4.8	51x 51x 4.8	2-13	2-13	3-9.5 mm	3-9.5 mm	3-15 mm
		1050 - 1800	305	1.63 - 4.27	1.91 - 4.17	1.32	2.67	2.01	13	22	220	51x 51x 4.8	51x 51x 4.8	3-13	3-13	3-9.5 mm	3-9.5 mm	5-15 mm
		1950 - 2100	305	4.27		2.01		2.77	13	22	310	51x 51x 4.8		3-13		3-9.5 mm		5-15 mm
	75 x 25	1200 - 2250	355	1.63 - 2.77		1.32		2.01	13	22	220	51x 51x 4.8		3-13		3-9.5 mm		5-15 mm
		2400 - 3000	355	2.01 - 2.77		1.32		2.77	13	22	310	51x 51x 4.8		3-13		4-9.5 mm		
		1050 - 2700	355		1.52 - 3.43		1.52						51x 51x 4.8		3-13		3-9.5 mm	
HELICAL	68 x 13	THROUGH 900	305	1.32 - 3.51	1.52 - 3.43	1.32	1.52	2.01	13	22	220	51x 51x 4.8	51x 51x 4.8	3-13	3-13	3-9.5 mm	3-9.5 mm	3-15 mm
		1050 - 1800	305	1.32 - 4.27	1.91 - 4.17	1.32	1.52	2.01	13	22	220	51x 51x 4.8	51x 51x 4.8	3-13	3-13	3-9.5 mm	3-9.5 mm	5-15 mm
		1950 - 2100	305	4.27		2.01		2.77	13	22	310	51x 51x 4.8		3-13		3-9.5 mm		5-15 mm
	75 x 25	1200 - 2250	355	1.63 - 2.77		1.32		2.01	13	22	220	51x 51x 4.8		3-13		3-9.5 mm		5-15 mm
		2400 - 3000	355	2.01 - 2.77		1.32		2.77	13	22	310	51x 51x 4.8		3-13		4-9.5 mm		
		1050 - 2700	355		1.52 - 3.43		1.52						51x 51x 4.8		3-13		3-9.5 mm	
HUGGER	68 x 13 REROLLED END	300 - 1350	100	1.32 - 2.77		1.32						64 x 38 x 4.8	64 x 38 x 4.8	1-13				3-15 mm
		1500 - 1650	100	2.77		1.63						64 x 38 x 4.8	64 x 38 x 4.8	1-13				3-15 mm
		900 - 1200	100	3.51		1.63						64 x 38 x 4.8	64 x 38 x 4.8	1-13				3-15 mm
		THROUGH 1800	267	1.32 - 4.27		1.32		2.01	13	22	220							
		1950 - 2100	267	4.27		2.01		2.77	13	22	310							
	75 x 25 REROLLED END	1200 - 2250	267	1.63 - 2.77		1.32		2.01	13	22	220							
		2400 - 3000	267	2.01 - 2.77		1.32		2.77	13	22	310							
	125 x 25 REROLLED END	1200 - 1650	190	1.63 - 2.77		1.63		2.01	13	22	220	64 x 38 x 4.8	64 x 38 x 4.8	1-13				3-15 mm
		1800 - 2250	190	1.63 - 2.01		1.63		2.01	13	22	220	64 x 38 x 4.8	64 x 38 x 4.8	1-13				3-15 mm
		1200 - 2250	190	1.63 - 3.51		1.63		2.01	13	22	220							
		1200 - 3000	305 SEE	1.63 - 2.77		1.63		2.01	13	22	220							
		1200 - 2100	305 NOTE	3.51		1.63		2.01	13	22	220							
		2250 - 3000	305 11	3.51		1.63		DOUBLE 2.01	13	22	220							
HAT BAND	68 x 13 REROLLED END	300 - 1350	70	1.32 - 2.77		1.63						64 x 38 x 4.8		1-13				
		1500 - 1650	70	2.77		1.63						64 x 38 x 4.8	64 x 38 x 4.8	1-13				3-15 mm
		THROUGH 1050	70	3.51		1.63						64 x 38 x 4.8	64 x 38 x 4.8	1-13				3-15 mm
		THROUGH 1650	70	3.51		1.63		2.01	13	22	220							
		THROUGH 1650	70	4.27		2.01		2.01	13	22	220							
	75 x 25 REROLLED END	1200 - 1800	70	1.63 - 2.01		1.63						64 x 38 x 4.8		1-13				3-15 mm
		1950 - 2250	70	1.63 - 2.01		1.63						64 x 38 x 4.8		1-13				3-15 mm
		1200 - 1650	70	2.77		1.63						64 x 38 x 4.8		1-13				3-15 mm
		1800 - 2700	70	2.77		2.01		2.77	13	22	220							

NOTES

1. All ferrous metal coupling band connection hardware shall be galvanized or electro-plated in accordance with the Standard Specifications.
2. For helically corrugated coupling bands, the connection angles may be oriented parallel to the pipe axis, provided connecting holes are slotted lengthwise sufficiently to allow adjustment for the helix angle.
3. Tension strap may be connected to band with either spot welds or fillet welds that develop minimum required strength of strap.
4. Use 32 mm gage line dimension on attached angle leg for rivets and spot welds.
5. Band thickness shall not be less than:
   (I) 3 standard thicknesses lighter than the thickness of the pipe for Corrugated Steel Pipe.
   (II) 2 standard thicknesses lighter than the thickness of the pipe and in no case lighter than 1.5 mm for Corrugated Aluminum Pipe.
6. Dimensions, thicknesses and strengths shown are minimum.
7. For pipe arches use same width band as for round pipe of equal periphery.
8. Fillet welds of equivalent strenght may be substituted for spot welds or rivets.
9. Spot welds shall develop minimum required strength of strap.
10. Pipe with rerolled ends having at least two 68 mm x 13 mm annular corrugations at each end with or without an upturned flange may be connected with any of the annular coupling bands shown for pipe of the same diameter and wall thickness and having 68 mm x 13 mm corrugations.
11. In the case of H-305 huggerbands, two piece bands are required for diameters through 2400 mm and three piece bands are required for diameters 2550 mm through 3000 mm.
12. Two piece bands are required for pipes greater than 1050 mm diameter.
13. The 57 mm x 51mm x 2.8 mm thick galvanized die-formed angle connector may be used in lieu of the 51mm x 51mm 4.8 mm angle connector for standard joints only on pipes through 1800 mm diameter.

STATE OF CALIFORNIA
DEPARTMENT OF TRANSPORTATION

CORRUGATED METAL PIPE COUPLING DETAILS NO. 5 STANDARD JOINT

NO SCALE

ALL DIMENSIONS ARE IN MILLIMETERS UNLESS OTHERWISE SHOWN

D97E

STD. PLAN D97E

Return to Table of Contents

DIST	COUNTY	ROUTE	KILOMETER POST TOTAL PROJECT	SHEET NO.	TOTAL SHEETS

Caltrans Metric

REGISTERED CIVIL ENGINEER

July 1, 1997
PLANS APPROVAL DATE

REGISTERED PROFESSIONAL ENGINEER Glenn DeCou No. C34547 Exp. 9-30-99 CIVIL STATE OF CALIFORNIA

The State of California or its officers or agents shall not be responsible for the accuracy or completeness of electronic copies of this plan sheet.

COUPLING TYPE	PIPE CORRUGATION (mm)	PIPE SIZE (mm)	W OR A (mm)	PIPE WALL THICKNESS CSP (mm)	PIPE WALL THICKNESS CAP (mm)	BAND THICKNESS CSP (mm)	BAND THICKNESS CAP (mm)	BAR AND STRAP (CSP ONLY) STRAP THICKNESS (mm)	BAR AND STRAP BOLTS (mm ø)	BAR AND STRAP BAR DIA (mm)	BAR AND STRAP BAR YIELD STRENGTH (MPa)	ANGLE DIMENSIONS CSP (mm)	ANGLE DIMENSIONS CAP (mm)	ANGLE BOLTS (No. - mm ø) CSP	ANGLE BOLTS (No. - mm ø) CAP	ANGLE RIVETS ANGLE TO BAND CSP (mm)	ANGLE RIVETS ANGLE TO BAND CAP (mm)	ANGLE SPOT WELDS ANGLE TO BAND CSP (mm)
TWO PIECE INTEGRAL FLANGE	38 x 6.5	150-250	178	1.63-2.01	1.52	1.63	1.52							2-10	2-10			
	68 x 13	300-600	305		1.52-2.67		1.52								3-13			
UNIVERSAL	68 x 13	THROUGH 900	305	1.63-3.51	1.52-3.43	1.63	1.52	2.01	13	22	220	51x 51x 4.8	51x 51x 4.8	3-13	3-13	3-9.5	3-9.5	5-15
		1050-1500	413	1.63-4.27	1.52-4.17	1.63	1.52	DOUBLE 2.01	13	22	220	51x 51x 6.4	51x 51x 6.4	4-13	4-13	5-9.5	5-9.5	
ANNULAR	68 x 13	THROUGH 900	305	1.63-3.51	1.52-3.43	1.63	1.52					51x 51x 4.8	51x 51x 4.8	3-13	3-13	3-9.5	3-9.5	5-15
		1050-1500	305	1.63-2.01		1.63						51x 51x 4.8		3-13		3-9.5		5-15
		1050-1500	305	2.77-4.27	3.43-4.17	1.63	1.91					51x 51x 6.4	51x 51x 6.4	3-13	3-13	5-9.5	5-9.5	
		1650-1800	610		4.17		2.67						51x 51x 6.4		5-13		5-9.5	
		1650-2100	610	2.77-4.27		1.63						51x 51x 6.4		5-13		7-9.5		
		1050-1350	305		1.52-2.67		1.52						51x 51x 4.8		3-13		3-9.5	
	75 x 25	1200-1500	355	1.63-2.01		1.63						51x 51x 4.8		3-13		3-9.5		5-15
		1200-1500	355	2.77		1.63						51x 51x 4.8		3-13		5-9.5		
		1650-3000	635	1.63-2.77		1.63						51x 51x 4.8		5-13		9-9.5		
		1050-1500	355		1.52-2.67		1.52						51x 51x 4.8		3-13		5-9.5	
		1050-1500	355		3.43		1.91						51x 51x 6.4		3-13		5-9.5	
		1650-2400	635		1.52-3.43		1.52						51x 51x 6.4		5-13		7-9.5	
		2400-2700	635		3.43		1.91						51x 51x 6.4		5-13		7-9.5	
HELICAL	68 x 13	THROUGH 900	305	1.63-3.51	1.52-3.43	1.63	1.52					51x 51x 4.8	51x 51x 4.8	3-13	3-13	3-9.5	3-9.5	5-15
		1050-1350	305		1.52-2.67		1.52						51x 51x 4.8		3-13		3-9.5	
		1050-1500	305	1.63-2.01		1.63						51x 51x 4.8		3-13		3-9.5		5-15
		1050-1500	305	2.77-4.27	3.43-4.17	1.63	1.91					51x 51x 6.4	51x 51x 6.4	3-13	3-13	5-9.5	5-9.5	
		1650-2100	610	2.77-4.27		1.63						51x 51x 6.4		5-13		7-9.5		
		1650-1800	610		4.17		2.67						51x 51x 6.4		5-13		5-9.5	
	75 x 25	1200-1500	355	1.63-2.01		1.63						51x 51x 4.8		3-13		3-9.5		5-15
		1200-1500	355	2.77		1.63						51x 51x 4.8		3-13		5-9.5		
		1650-3000	635	1.63-2.77		1.63						51x 51x 4.8		5-13		9-9.5		
		1050-1500	355		1.52-2.67		1.52						51x 51x 4.8		3-13		5-9.5	
		1050-1500	355		3.43		1.91						51x 51x 6.4		3-13		5-9.5	
		1650-2400	635		1.52-3.43		1.52						51x 51x 6.4		5-13		7-9.5	
		2400-2700	635		3.43		1.91						51x 51x 6.4		5-13		7-9.5	

NOTES

1. All ferrous metal coupling band connection hardware shall be galvanized or electro-plated in accordance with the Standard Specifications.
2. For helically corrugated coupling bands, the connection angles may be oriented parallel to the pipe axis, provided connecting holes are slotted lengthwise sufficiently to allow adjustment for the helix angle.
3. Tension strap may be connected to band with either spot welds or fillet welds that develop minimum required strength of strap.
4. Use 32 mm gage line dimension on attached angle leg for rivets and spot welds.
5. Band thickness shall not be less than:
   (I) 3 standard thicknesses lighter than the thickness of the pipe for corrugated steel pipe.
   (II) 2 standard thicknesses lighter than the thickness of the pipe and in no case lighter than 1.5 mm for corrugated aluminum pipe.
6. Dimensions, thicknesses and strengths shown are minimum.
7. For pipe arches use same width band as for round pipe of equal periphery.
8. Fillet welds of equivalent strength may be substituted for spot welds or rivets.
9. Spot welds shall develop minimum required strength of strap.
10. Pipe with rerolled ends having at least two 68 mm x 13 mm annular corrugations at each end with or without an upturned flange may be connected with any of the annular coupling bands shown for pipe of the same diameter and wall thickness and having 68 mm x 13 mm corrugations.
11. In the case of H-305 huggerbands, two piece bands are required for diameters through 2400 mm and three piece bands are required for diameters 2550 mm through 3000 mm.
12. Two piece bands are required for pipes greater than 1050 mm diameter.

STATE OF CALIFORNIA
DEPARTMENT OF TRANSPORTATION

CORRUGATED METAL PIPE COUPLING DETAILS NO. 6 POSITIVE JOINT

NO SCALE

ALL DIMENSIONS ARE IN MILLIMETERS UNLESS OTHERWISE SHOWN

D97F

STD. PLAN D97F

Return to Table of Contents

DIST	COUNTY	ROUTE	KILOMETER POST TOTAL PROJECT	SHEET NO.	TOTAL SHEETS

Metric

REGISTERED CIVIL ENGINEER

July 1, 1997
PLANS APPROVAL DATE

REGISTERED PROFESSIONAL ENGINEER Glenn DeCou No. C34547 Exp. 9-30-99 CIVIL STATE OF CALIFORNIA

The State of California or its officers or agents shall not be responsible for the accuracy or completeness of electronic copies of this plan sheet.

STD. PLAN D97G

POSITIVE JOINTS

COUPLING TYPE	PIPE CORRUGATION (mm)	PIPE SIZE (mm)	W OR A (mm)	PIPE WALL THICKNESS CSP (mm)	PIPE WALL THICKNESS CAP (mm)	BAND THICKNESS CSP (mm)	BAND THICKNESS CAP (mm)	BAR AND STRAP (CSP ONLY) STRAP THICKNESS (mm)	BOLTS (mm ø)	BAR DIA (mm)	BAR YIELD STRENGTH (MPa)	ANGLE DIMENSIONS CSP (mm)	ANGLE DIMENSIONS CAP (mm)	BOLTS (No. -mm ø) CSP	BOLTS (No. -mm ø) CAP	RIVETS ANGLE TO BAND CSP	RIVETS ANGLE TO BAND CAP	SPOT WELDS ANGLE TO BAND CSP
HUGGER	68 x 13 REROLLED END	THROUGH 1200	267	2.77		1.63		2.01	13	22	220							
		1350 - 1650	267	2.77		1.63		DOUBLE 2.01	13	22	220							
		THROUGH 1350	267	1.63 - 2.01		1.63		2.01	13	22	220							
		THROUGH 1500	267	3.51		2.01		DOUBLE 2.01	13	22	220							
		1650 - 1800	267	3.51		2.77		DOUBLE 2.01	13	22	220							
		THROUGH 1800	267	4.27		2.77		DOUBLE 2.77	13	22	310							
	75 x 25 REROLLED END	1200 - 2100	267	2.77		2.01		DOUBLE 2.01	13	22	220							
		1200 - 2250	267	1.63 - 2.01		1.63		DOUBLE 2.01	13	22	220							
		2400 - 2550	267	2.01		2.01		DOUBLE 2.01	13	22	220							
		2250 - 3000	267	2.77		2.77		DOUBLE 2.77	13	22	310							
HAT BAND	68 x 13 REROLLED END	300 - 750	70	1.63 - 2.01		1.63						64 x 38 x 4.8		1-13				3-15 mm
		900 - 1200	70	1.63		1.63						64 x 38 x 4.8		1-13		3-12.7 mm		3-15 mm
		900 - 1200	70	2.01		2.01		2.01	13	22	220							
		THROUGH 1050	70	2.77		2.01		2.01	13	22	220							

DOWNDRAIN

COUPLING TYPE	PIPE CORRUGATION (mm)	PIPE SIZE (mm)	W OR A (mm)	PIPE WALL THICKNESS CSP (mm)	PIPE WALL THICKNESS CAP (mm)	BAND THICKNESS CSP (mm)	BAND THICKNESS CAP (mm)	BAR AND STRAP (CSP ONLY) STRAP THICKNESS (mm)	BOLTS (mm ø)	BAR DIA (mm)	ANGLE DIMENSIONS CSP (mm)	ANGLE DIMENSIONS CAP (mm)	BOLTS (No. -mm ø) CSP	BOLTS (No. -mm ø) CAP	RIVETS ANGLE TO BAND CSP	RIVETS ANGLE TO BAND CAP	SPOT WELDS ANGLE TO BAND CSP
TWO PIECE INTEGRAL FLANGE	38 x 6.5	150	178	1.63		1.32							3-10				
	38 x 6.5	200 - 250	178	1.63	1.52	1.63	1.52						3-10	3-10			
ANNULAR	68 x 13	THROUGH 600	305	1.63	1.52	1.63	1.52				51 x 51 x 4.8	51 x 51 x 4.8	3-13	3-13	3-9.5 mm	3-9.5 mm	3-15 mm
HUGGER	68 x 13 REROLLED END	THROUGH 600	267	1.63		1.63		2.01	13	22	51 x 51 x 4.8	51 x 51 x 4.8	3-13	3-13	3-9.5 mm	3-9.5 mm	3-15 mm

NOTES

1. All ferrous metal coupling band connection hardware shall be galvanized or electroplated in accordance with the Standard Specifications.
2. For helically corrugated coupling bands, the connection angles may be oriented parallel to the pipe axis, provided connecting holes are slotted lengthwise sufficiently to allow adjustment for the helix angle.
3. Tension straps may be connected to band with either spot welds or fillet welds that develop minimum required strength of strap..
4. Use 32 mm gage line dimension on attached angle leg for rivets and spot welds.
5. Band thickness shall not be less than:
   (I) 3 standard thickness lighter than the thickness of the pipe for corrugated steel pipe.
   (II) 2 standard thickness lighter than the thickness of the pipe and in no case lighter than 1.5 mm for corrugated aluminum pipe.
6. Dimensions, thickness and strengths shown are minimum.
7. For pipe arches use same width band as for round pipe of equal periphery.
8. Fillet welds of equivalent strength may be substituted for spot welds or rivets.
9. Spot welds shall develop minimum required strength of strap.
10. Pipe with rerolled ends having at least two 68 mm x 13 mm annular corrugations at each end with or without an upturned flange may be connected with any of the annular coupling bands shown for pipe of the same diameter and wall thickness and having 68 mm x 13 mm corrugations.
11. Two piece bands are required for pipes greater than 1050 mm diameter.
12. For downdrain applications, two piece integral flange couplers shall have factory applied sleeve type rubber gaskets with a minimum length pf 175 mm measured along the length of the pipe.

STATE OF CALIFORNIA
DEPARTMENT OF TRANSPORTATION

CORRUGATED METAL PIPE COUPLING DETAILS NO. 7 POSITIVE JOINTS AND DOWNDRAINS

NO SCALE

ALL DIMENSIONS ARE IN MILLIMETERS UNLESS OTHERWISE SHOWN

D97G

Return to Table of Contents

DIST	COUNTY	ROUTE	KILOMETER POST TOTAL PROJECT	SHEET NO.	TOTAL SHEETS

REGISTERED CIVIL ENGINEER

July 1, 1997
PLANS APPROVAL DATE

Glenn DeCou
No. C34547
Exp. 9-30-99
CIVIL
REGISTERED PROFESSIONAL ENGINEER
STATE OF CALIFORNIA

The State of California or its officers or agents shall not be responsible for the accuracy or completeness of electronic copies of this plan sheet.

Metric

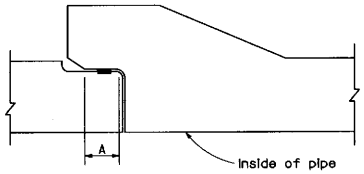

CONCRETE JOINT-FLARED BELL DESIGN

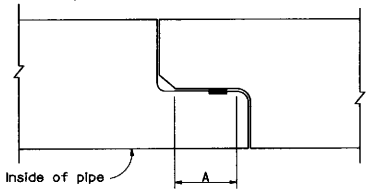

CONCRETE JOINT-FLUSH BELL DESIGN

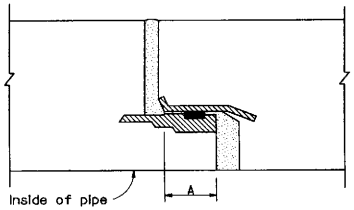

STEEL JOINT-FLUSH BELL DESIGN

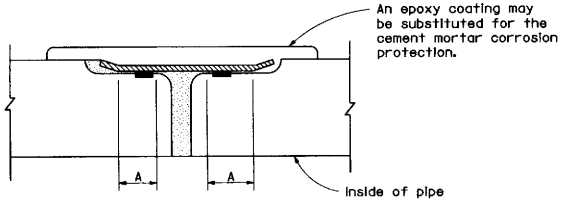

CONCRETE JOINT-DOUBLE GASKET DESIGN

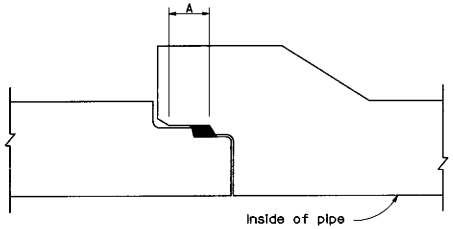

CONCRETE JOINT-FLARED BELL DESIGN
(TYPE R-3)

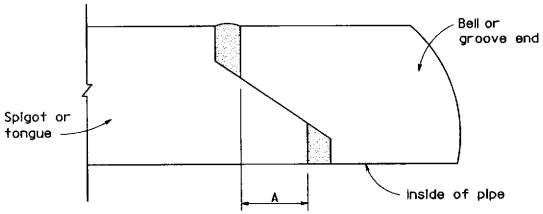

SELF-CENTERING TONGUE & GROOVE

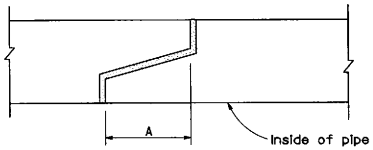

TONGUE & GROOVE DESIGN

LEGEND

- Cement Mortar
- Rubber Gasket
- Steel

DIMENSION	STANDARD	POSITIVE	PIPE DIAMETER LIMITS
A	6 mm Min	13 mm Min	150 mm through 300 mm Dia
A	13 mm Min	19 mm Min	375 mm through 825 mm Dia
A	19 mm Min	25 mm Min	Greater than 825 mm Dia

STATE OF CALIFORNIA
DEPARTMENT OF TRANSPORTATION

REINFORCED CONCRETE PIPE OR NON-REINFORCED CONCRETE PIPE STANDARD AND POSITIVE JOINTS

NO SCALE

ALL DIMENSIONS ARE IN MILLIMETERS UNLESS OTHERWISE SHOWN

D97H

STD. PLAN D97H

Return to Table of Contents

DIST	COUNTY	ROUTE	KILOMETER POST TOTAL PROJECT	SHEET NO.	TOTAL SHEETS

REGISTERED CIVIL ENGINEER

July 1, 1997
PLANS APPROVAL DATE

Glenn DeCou No. C34547 Exp. 9-30-99 CIVIL — REGISTERED PROFESSIONAL ENGINEER — STATE OF CALIFORNIA

The State of California or its officers or agents shall not be responsible for the accuracy or completeness of electronic copies of this plan sheet.

California Metric

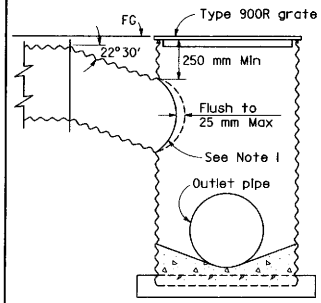

TYPE GMP INLET

See Standard Plans D75 and D77B for additional inlet details

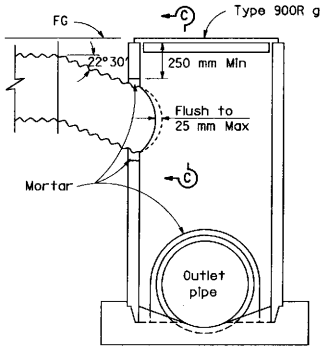

TYPE GCP INLET

See Standard Plans D75 and D77B for additional inlet details

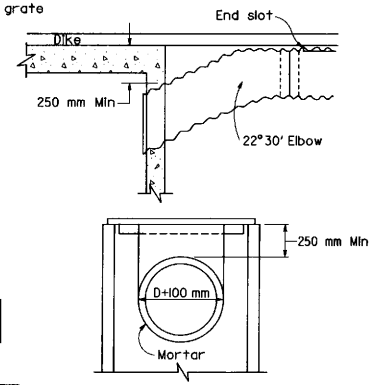

SECTION C-C

SLOTTED DRAIN CONNECTIONS TO STANDARD INLET STRUCTURES

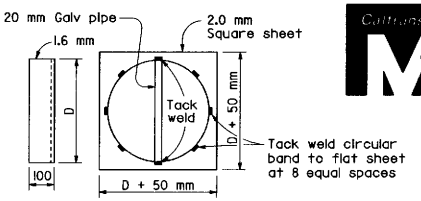

METAL CAP DETAIL

See Note 2

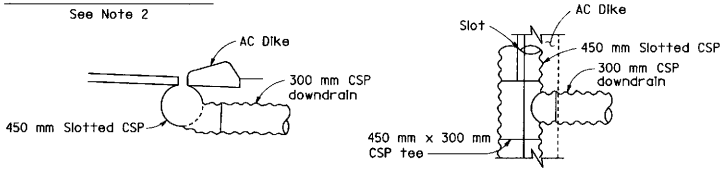

ELEVATION

PLAN

SHOULDER INSTALLATION 450 mm SLOTTED CSP TO 300 mm CSP DOWNDRAIN

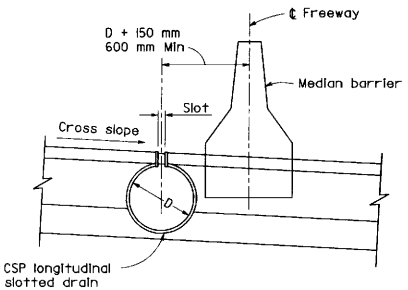

TYPICAL CROSS SECTION

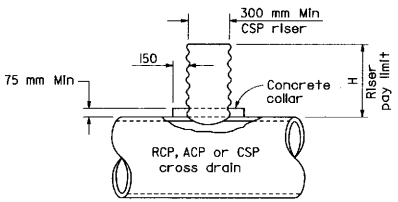

RISER CONNECTION DETAIL

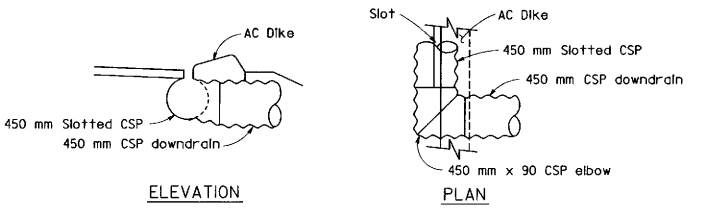

ELEVATION

PLAN

SHOULDER INSTALLATION 450 mm SLOTTED CSP TO 450 mm CSP DOWNDRAIN

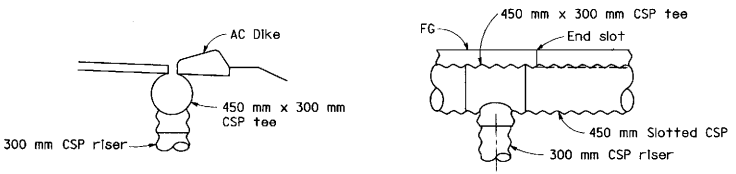

ELEVATION-END VIEW

ELEVATION-SIDE VIEW

SHOULDER INSTALLATION 450 mm SLOTTED CSP TO 300 mm CSP RISER

NOTES

1. Either field joint sealed with a pliable mixture of sand, portland cement and emulsified asphalt (mixture of 1 part portland cement, 3-5 parts sand and 1½ parts SS1 emulsified asphalt), or continuous weld.
2. "D" equals nominal pipe diameter.
3. Length of elbows and tees is included in the linear feet of pipe involved shown on the Drainage List of the project plans.
4. Watertight joints required on all slotted CSP connections.

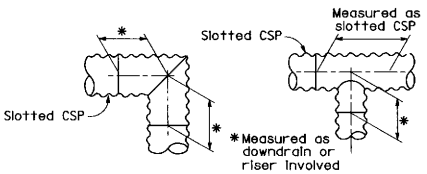

MEASUREMENT OF CORRUGATED STEEL PIPE ELBOWS AND TEES USED WITH SLOTTED DRAINS

See Note 3

STATE OF CALIFORNIA
DEPARTMENT OF TRANSPORTATION

SLOTTED CORRUGATED STEEL PIPE DRAIN DETAILS

NO SCALE

ALL DIMENSIONS ARE IN MILLIMETERS UNLESS OTHERWISE SHOWN

D98A

STD. PLAN D98A

Return to Table of Contents

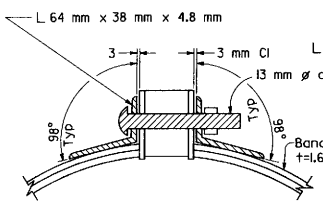

SECTION B-B

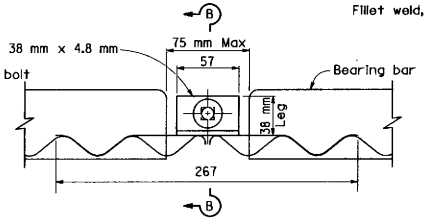

ELEVATION

MODIFIED HUGGER BAND

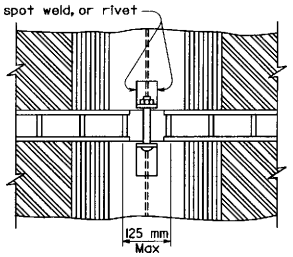

PART PLAN

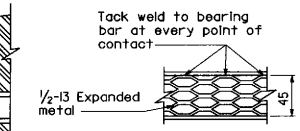

HEEL GUARD

See Note 11

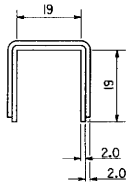

PARTIAL SECTION A-A

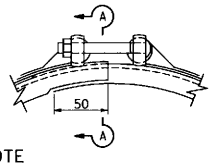

NOTE

As an alternate to swagged end an oversized bridge clip may be used.

SIDE VIEW

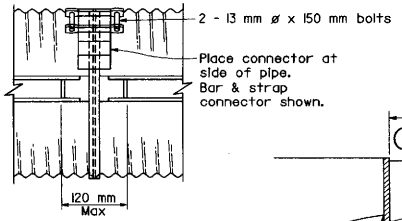

PART PLAN

SECTION E-E

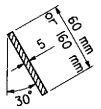

SECTION F-F

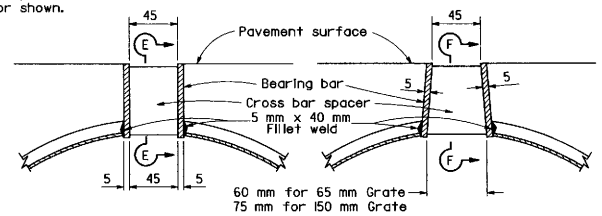

RECTANGULAR SPACER

TAPERED SPACER

GRATE SLOT-SECTION

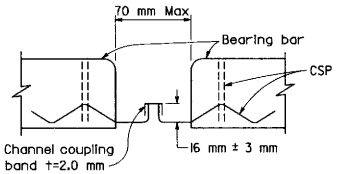

ELEVATION

BAR & STRAP CONNECTOR

See Standard Plan D97A

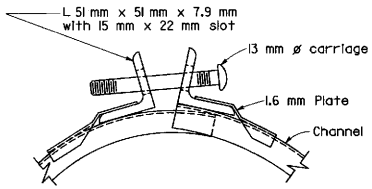

SIDE VIEW

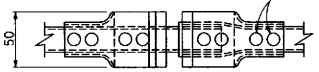

PART PLAN

ANGLE CONNECTOR

CHANNEL COUPLING BAND

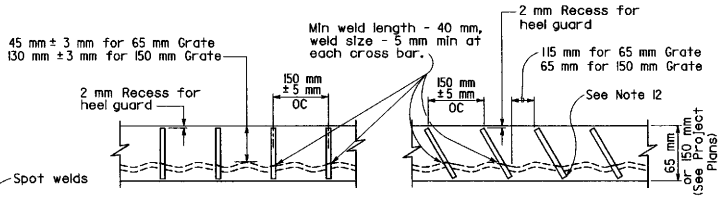

RECTANGULAR SPACER

TAPERED SPACER

GRATE SLOT-LONGITUDINAL ELEVATION VIEW

See Note 13

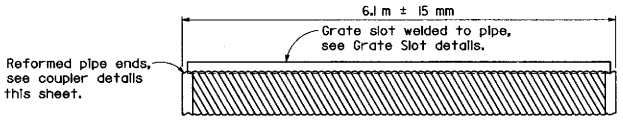

SLOTTED CORRUGATED STEEL PIPE

NOTES

1. Drain pipe seams may be continuous helical lock seam or helical weld seam.
2. Drain sections shall be assembled with either of the coupling bands shown.
3. The cross bar spacer shall be welded to the bearing bars in such a manner as to develop a minimum tensile strength of 55,000 N normal to the longitudinal axis of the bearing bars.
4. The maximum variance from a straight line between the extreme top corners of the bearing bars shall be 12 mm in 6.0 m.
5. All coupling band connections shall be galvanized or coated in accordance with the Standard Specifications.
6. Spot welds shall develop minimum required strength of strap.
7. Dimensions shown are minimums.
8. Contractor to provide an adequate method of keeping the asphalt concrete out of pipe, during paving operations.
9. Minimum pipe wall thickness is 1.6 mm.
10. 600 mm Diameter will not support normal highway wheel loads.
11. Use heel guard when specified.
12. Bottom edge of cross bar spacer offset in direction of flow.
13. Unless otherwise shown on the plans or specified in the special provisions, cross bar spacers shall be either rectangular or tapered at the contractor's option.

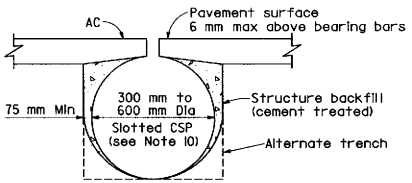

BACKFILL

DIST	COUNTY	ROUTE	KILOMETER POST TOTAL PROJECT	SHEET NO.	TOTAL SHEETS

REGISTERED CIVIL ENGINEER

July 1, 1997

PLANS APPROVAL DATE

Glenn DeCou No. C34547 Exp. 9-30-99 CIVIL

The State of California or its officers or agents shall not be responsible for the accuracy or completeness of electronic copies of this plan sheet.

STATE OF CALIFORNIA
DEPARTMENT OF TRANSPORTATION

SLOTTED CORRUGATED STEEL PIPE DRAIN DETAILS

NO SCALE

ALL DIMENSIONS ARE IN MILLIMETERS UNLESS OTHERWISE SHOWN

D98B

STD. PLAN D98B

Return to Table of Contents

DIST	COUNTY	ROUTE	KILOMETER POST TOTAL PROJECT	SHEET NO.	TOTAL SHEETS

California Metric

REGISTERED CIVIL ENGINEER

July 1, 1997
PLANS APPROVAL DATE

REGISTERED PROFESSIONAL ENGINEER Kevin M. Hewitt NO. C36577 EXP. 6-30-00 CIVIL STATE OF CALIFORNIA

The State of California or its officers or agents shall not be responsible for the accuracy or completeness of electronic copies of this plan sheet.

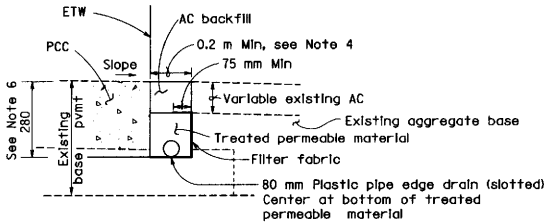

TYPE 1 STRUCTURAL SECTION DRAINAGE SYSTEM

(FOR EXISTING HIGHWAY FACILITY)

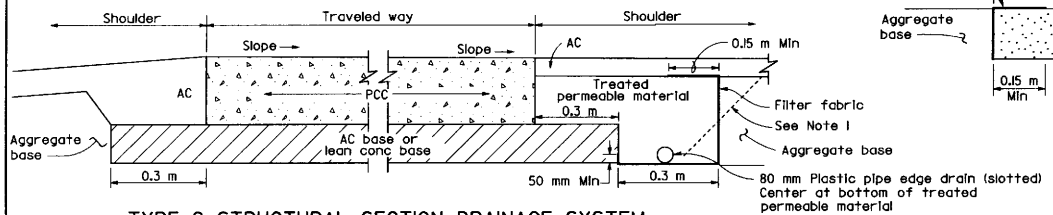

TYPE 2 STRUCTURAL SECTION DRAINAGE SYSTEM

(NEW CONSTRUCTION)

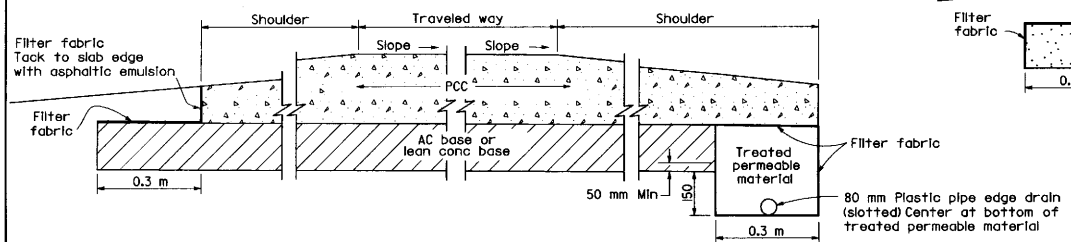

TYPE 3 STRUCTURAL SECTION DRAINAGE SYSTEM

(NEW CONSTRUCTION)

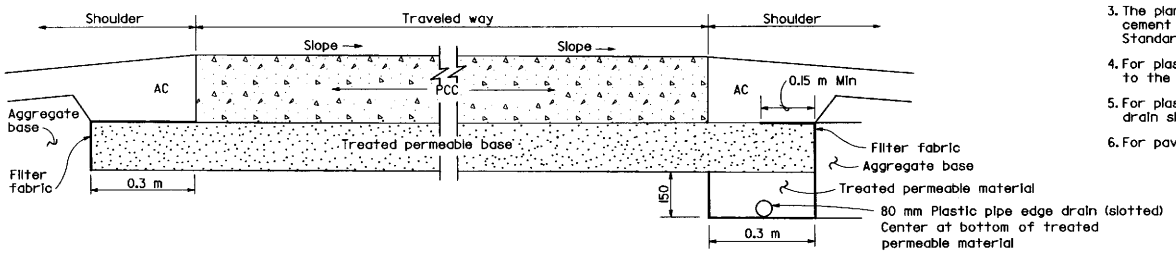

TYPE 4 STRUCTURAL SECTION DRAINAGE SYSTEM

(NEW CONSTRUCTION)

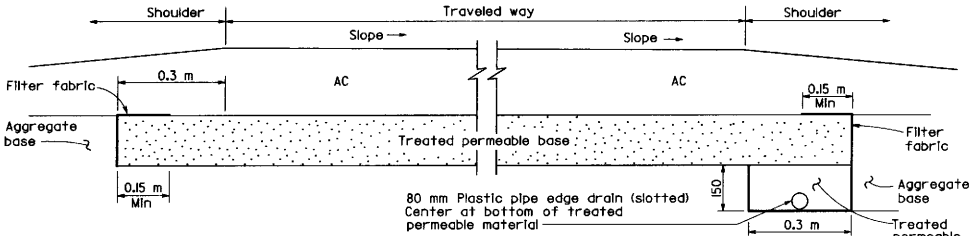

TYPE 5 STRUCTURAL SECTION DRAINAGE SYSTEM

(NEW CONSTRUCTION)

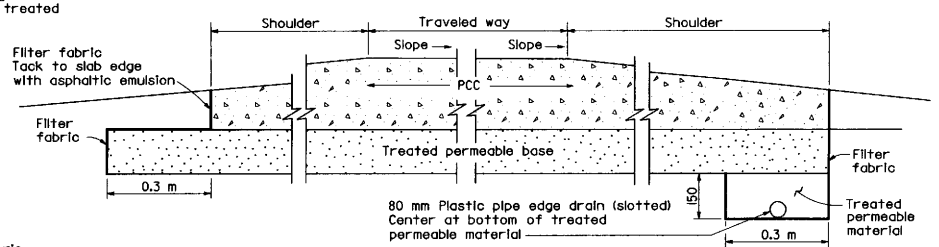

TYPE 6 STRUCTURAL SECTION DRAINAGE SYSTEM

(NEW CONSTRUCTION)

NOTES

1. At the Contractor's option, on new construction, the vertical jointline (including the filter fabric) between the treated permeable material and the shoulder base/subgrade material may be rotated about its midpoint to a slope not flatter than 1:1 as shown by the dashed lines.
2. See the project plans and typical cross sections for pavement structural section details.
3. The plan layout for structural section drainage collector and outlet systems for new portland cement concrete pavement and new asphalt concrete pavement is the same as that shown on Standard Plan D99B.
4. For plastic pipe edge drain diameter larger than 80 mm, the minimum trench width shall be equal to the outside diameter of the plastic pipe plus 100 mm.
5. For plastic pipe edge drain diameters larger than 80 mm, all details for 80 mm plastic pipe edge drain shall apply.
6. For pavements thicker than 230 mm, the minimum trench depth is 0.3 m.

STATE OF CALIFORNIA
DEPARTMENT OF TRANSPORTATION

STRUCTURAL SECTION DRAINAGE SYSTEM DETAILS

NO SCALE

ALL DIMENSIONS ARE IN MILLIMETERS UNLESS OTHERWISE SHOWN

D99A

STD. PLAN D99A

Return to Table of Contents

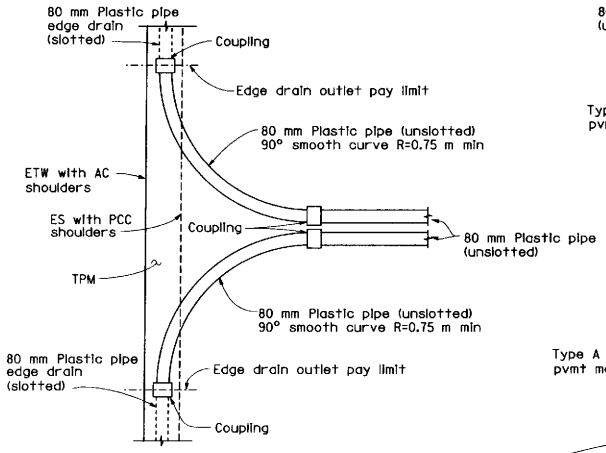

PLAN

DUAL OUTLET AND/OR VENT

See Note 2

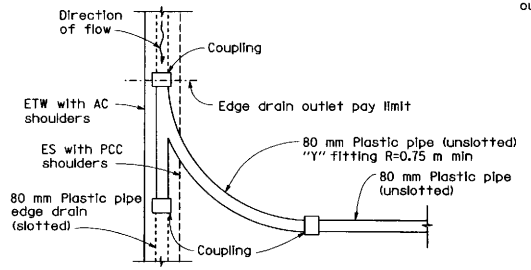

PLAN

INTERMEDIATE OUTLET

See Note 2

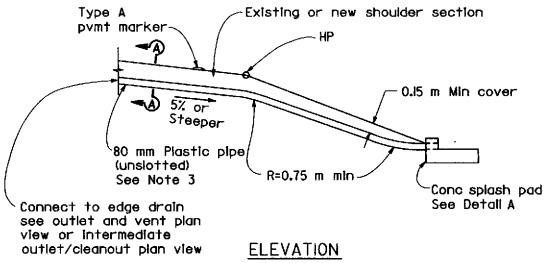

ELEVATION

TYPE A OUTLET

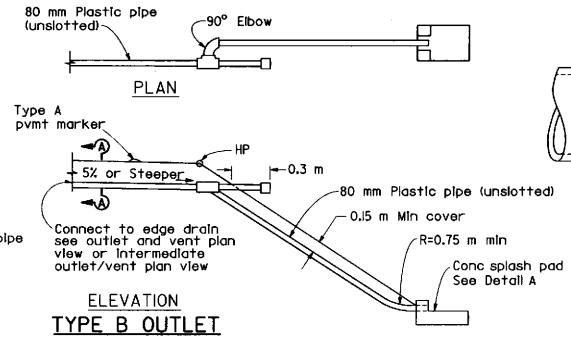

ELEVATION

TYPE B OUTLET

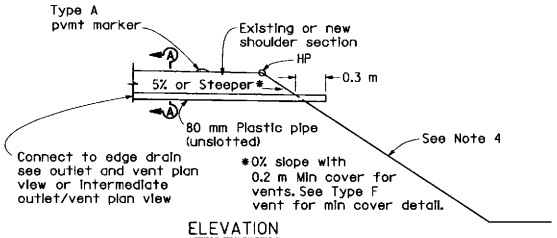

ELEVATION

TYPE C OUTLET AND/OR VENT

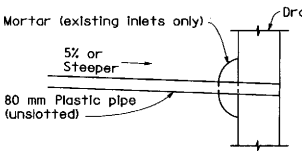

ELEVATION

TYPE D OUTLET CONNECTION TO DRAINAGE INLET

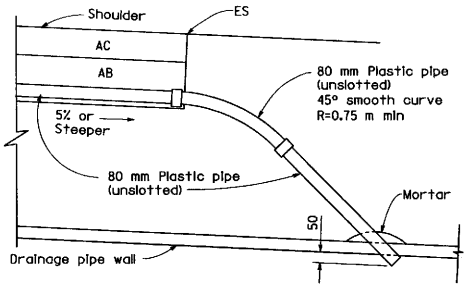

ELEVATION

TYPE E OUTLET CONNECTION TO DRAINAGE PIPE

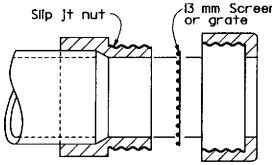

EDGE DRAIN OUTLET AND VENT COVER

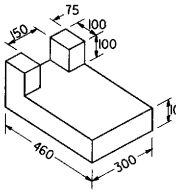

DETAIL A

CONCRETE SPLASH PAD

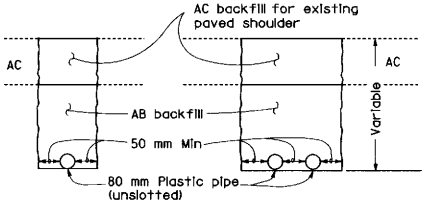

SECTION A-A

OUTLET EXCAVATION AND BACKFILL IN PAVED SHOULDERS

See Note 5

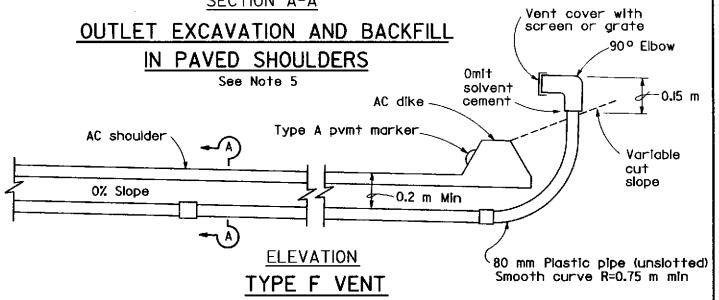

ELEVATION

TYPE F VENT

NOTES

1. See project plans for location and type of outlet and/or vent installations.
2. The position of slotted plastic pipe and limits of treated permeable material shown are for the Type I structural section drainage system shown on Standard Plan D99A.
3. The maximum length of plastic pipe outlet shall be 15 mm (±) measured from the longitudinal centerline of the collector trench to the pipe outlet. For pipe lengths greater than 15 m use Type B outlets.
4. See project plans for slope protection details at Type C pipe outlets.
5. Backfill with aggregate base from outside edge paved shoulder to hinge point, and backfill with native material in slope area.
6. See Standard Plan D99C for Type G vent detail used with portland cement concrete shoulders.

DIST	COUNTY	ROUTE	KILOMETER POST TOTAL PROJECT	SHEET NO.	TOTAL SHEETS

REGISTERED CIVIL ENGINEER

July 1, 1997
PLANS APPROVAL DATE

REGISTERED PROFESSIONAL ENGINEER Kevin M. Hewitt No. C36577 Exp. 6-30-00 CIVIL STATE OF CALIFORNIA

The State of California or its officers or agents shall not be responsible for the accuracy or completeness of electronic copies of this plan sheet.

STATE OF CALIFORNIA
DEPARTMENT OF TRANSPORTATION

EDGE DRAIN OUTLET AND VENT DETAILS

NO SCALE

ALL DIMENSIONS ARE IN MILLIMETERS UNLESS OTHERWISE SHOWN

D99B

STD. PLAN D99B

Return to Table of Contents

DIST	COUNTY	ROUTE	KILOMETER POST TOTAL PROJECT	SHEET NO.	TOTAL SHEETS

Metric

REGISTERED CIVIL ENGINEER

July 1, 1997
PLANS APPROVAL DATE

The State of California or its officers or agents shall not be responsible for the accuracy or completeness of electronic copies of this plan sheet.

REGISTERED PROFESSIONAL ENGINEER Kevin M. Hewitt No. C36577 Exp. 6-30-00 CIVIL STATE OF CALIFORNIA

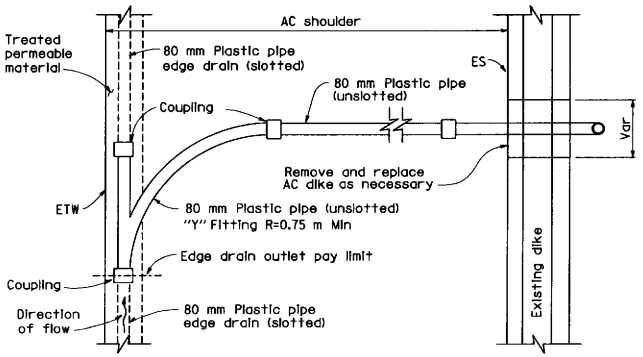

PLAN VIEW
TYPE 1 CLEANOUT
See Note 2

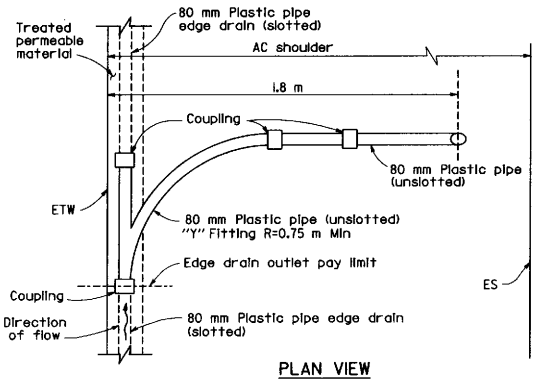

PLAN VIEW
TYPE 2 CLEANOUT
See Note 2

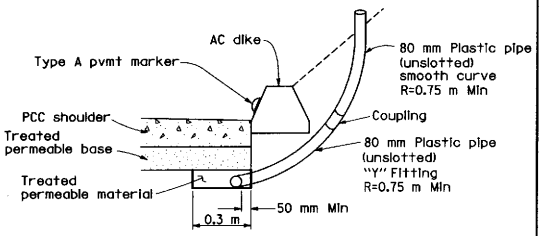

SECTION A-A
TYPE 3 CLEANOUT/TYPE G VENT

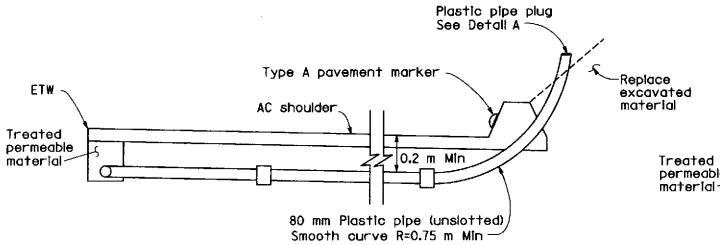

ELEVATION
TYPE 1 CLEANOUT

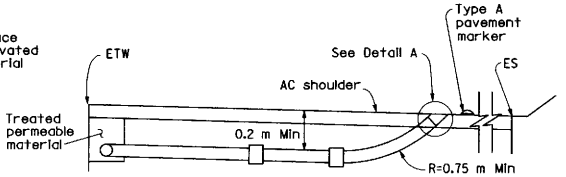

ELEVATION
TYPE 2 CLEANOUT

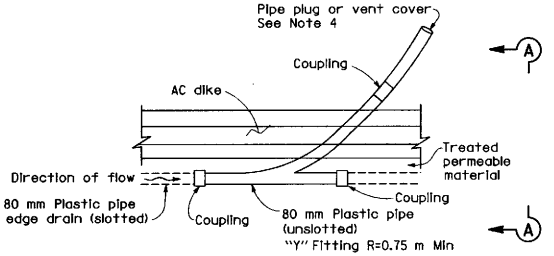

PLAN VIEW
TYPE 3 CLEANOUT/TYPE G VENT
See Note 4

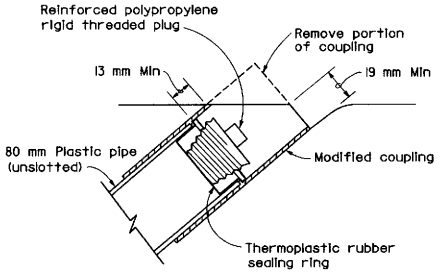

ALTERNATIVE 1

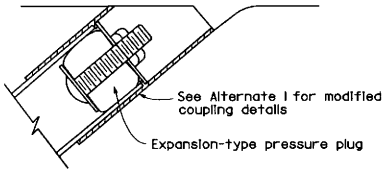

ALTERNATIVE 2

PLASTIC PIPE PLUG
DETAIL A
See Note 3

NOTES

1. See project plans for location and type of cleanout or vent installations.
2. The position of slotted plastic pipe and limits of treated permeable material shown are for the Type 1 structural section drainage system shown on Standard Plan D99A.
3. Other types of plugs may be substituted with the Engineer's approval.
4. The Type 3 cleanout and Type G vent is for use with portland cement concrete shoulders. The Type 6 structural section drainage system from Standard Plan D99A is shown. Use plastic pipe plug shown in Detail A with Type 3 cleanouts. Use vent cover shown on Standard Plan D99B with Type G vents.

STATE OF CALIFORNIA
DEPARTMENT OF TRANSPORTATION

EDGE DRAIN CLEANOUT AND VENT DETAILS

NO SCALE

ALL DIMENSIONS ARE IN MILLIMETERS UNLESS OTHERWISE SHOWN

D99C

STD. PLAN D99C

Return to Table of Contents

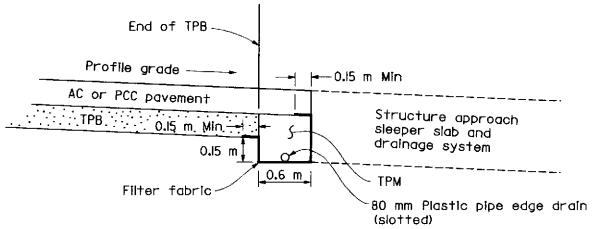

LONGITUDINAL SECTION

CROSS DRAIN INTERCEPTOR AT STRUCTURE APPROACH

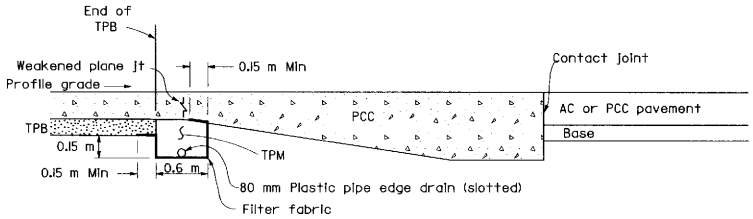

LONGITUDINAL SECTION

CROSS DRAIN INTERCEPTOR AT END ANCHOR OR PRESSURE RELIEF JOINT

See Note 2

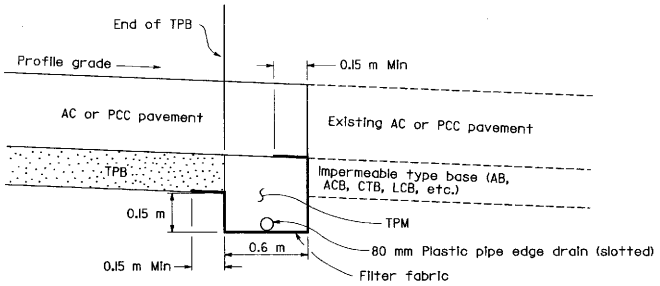

LONGITUDINAL SECTION

TERMINAL CROSS DRAIN INTERCEPTOR

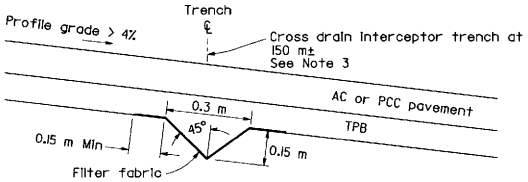

LONGITUDINAL SECTION

INTERMEDIATE CROSS DRAIN INTERCEPTOR

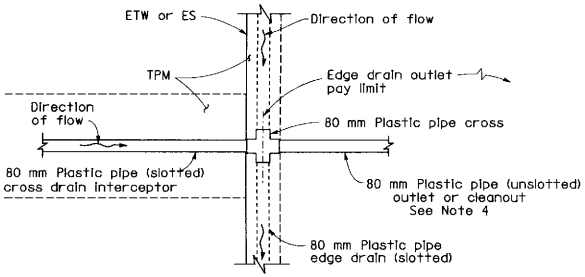

PLAN VIEW

CROSS DRAIN INTERCEPTOR OUTLET CONNECTION DETAILS

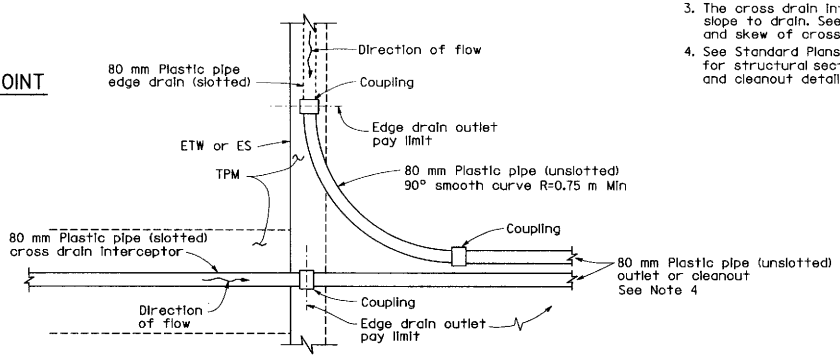

PLAN VIEW

COMBINED CROSS DRAIN INTERCEPTOR/ EDGE DRAIN OUTLET DETAILS

NOTES

1. Cross drain interceptors are for use with treated permeable bases.
2. See Standard Plan A35A for Pavement End Anchor and Pressure Relief Joint construction details. A typical pavement end anchor is shown.
3. The cross drain interceptor trench shall slope to drain. See project plans for location and skew of cross drains.
4. See Standard Plans D99B and D99C, for structural section drainage system outlet and cleanout details, respectively.

DIST	COUNTY	ROUTE	KILOMETER POST TOTAL PROJECT	SHEET NO.	TOTAL SHEETS

Caltrans Metric

REGISTERED CIVIL ENGINEER

July 1, 1997
PLANS APPROVAL DATE

REGISTERED PROFESSIONAL ENGINEER Kevin M. Herritt No. C36577 Exp. 6-30-00 CIVIL STATE OF CALIFORNIA

The State of California or its officers or agents shall not be responsible for the accuracy or completeness of electronic copies of this plan sheet.

STATE OF CALIFORNIA
DEPARTMENT OF TRANSPORTATION

CROSS DRAIN INTERCEPTOR DETAILS

NO SCALE

ALL DIMENSIONS ARE IN MILLIMETERS UNLESS OTHERWISE SHOWN

D99D

STD. PLAN D99D

Return to Table of Contents

DIST	COUNTY	ROUTE	KILOMETER POST TOTAL PROJECT	SHEET NO.	TOTAL SHEETS

REGISTERED CIVIL ENGINEER

July 1, 1997
PLANS APPROVAL DATE

The State of California or its officers or agents shall not be responsible for the accuracy or completeness of electronic copies of this plan sheet.

LICENSED LANDSCAPE ARCHITECT
STATE OF CALIFORNIA

Caltrans Metric

A

AB	aggregate base
ABS	acrylonitrile-butadiene-styrene
AC	asphalt concrete
Adj	adjacent/adjustable
AIC	auxiliary irrigation controller
Alt	alternative
AMEND	amendment
ARV	air release valve
AUTO	automatic
AUX	auxiliary
AVB	atmospheric vacuum breaker

B

B&B	balled and burlapped
B/B	brass/bronze
B/B/PL	brass/bronze/plastic
B/PL	brass/plastic
Bit Ctd	bituminous coated
BP	booster pump
BPA	backflow preventer assembly
BPAE	backflow preventer assembly in enclosure
BPE	backflow preventer enclosure
BV	ball valve

C

CAP	corrugated aluminum pipe
CARV	combination air release valve
CCA	cam coupler assembly
CEC	controller enclosure cabinet
CHDPE	corrugated high density polyethylene
CL	chain link
CNC	control and neutral conductors
Conc	concrete
Cond	conduit
CSP	corrugated steel pipe
CST	center strip
CV	check valve

D

Dia	diameter
DIP	ductile iron pipe
DN	diameter nominal

E

EA	each
ELEC	electric/electrical
Elev	elevation
ENCL	enclosure
EP	edge of pavement
ES	edge of shoulder
EST	end strip
ESTB	establishment
ETW	edge of traveled way

F

F	full circle
F/P	full/part circle
FAU	filter assembly unit
FCV	flow control valve
FERT	fertilizer
FG	finished grade
FIPT	female iron pipe thread
FIS	fertilizer injector system
FL	flow line
FM	flow monitor
FS	flow sensor
FV	flush valve

G

Galv	galvanized
GARV	garden valve
GSP	galvanized steel pipe
GV	gate valve

H

H	half circle, height, hour
HB	hose bib
HDPE	high density polyethylene
HP	horse power/hinge point
HPL	high pressure line
Hwy	highway

I

IC	irrigation controller
ICC	irrigation controller(s) in controller enclosure cabinet
ID	inside diameter
IFS	irrigation filtration system
IPS	iron pipe size
IPT	iron pipe thread
Irr	irrigation

L

L/h	liters per hour
L/min	liters per minute
L/s	liters per second

K

KP	kilometer post

M

Max	maximum
MBGR	metal beam guard railing
MCV	manual control valve
MIC	master irrigation controller
Min	minimum
MIPT	male iron pipe thread
Misc	miscellaneous
Mtl	material
MVP	maintenance vehicle pullout

N

NL	nozzle line
No.	number
NPT	national pipe thread

O

O/C	on center
OD	outside diameter

P

P	part circle
PB	pull box
PCC	portland cement concrete
PE	polyethylene
PL	plastic
PLT	plant/planting
PLT ESTB	plant establishment
PR	pressure rated
PRLV	pressure relief valve
PRV	pressure reducing valve
PVC	polyvinyl chloride
Pvmt	pavement

Q

Q	quarter circle
QCV	quick coupling valve

R

R	radius
RCP	reinforced concrete pipe
RCV	remote control valve
RCVM	remote control valve (master)
RCW	reclaimed water
REQ	required
R/W	right of way

S

S	slip
SCH	schedule
SF	state-furnished
Shld	shoulder
SI	international system of units
SST	side strip
STA	station
Std	standard
SW	sidewalk/sound wall

T

T	third circle/ thread
TAB	tablet(s)
TLS	truck loading standpipe
TQ	three quarter circle
TRVD	traveled
TT	two third circle
Typ	typical

U

UG	underground

V

VAU	valve assembly unit

W

W/	with
WM	water meter
WS	wye strainer
WSP	welded steel pipe
WWM	welded wire mesh

METRIC UNITS (SI)

SYMBOL	UNIT
mm	millimeter
m	meter
m^2	square meter
m^3	cubic meter
g	gram
kg	kilogram
s	second
KPa	kilopascal
L	liter
ha	hectare

NOTE

FOR ADDITIONAL ABBREVIATIONS SEE STANDARD PLAN A10A.

STATE OF CALIFORNIA
DEPARTMENT OF TRANSPORTATION

PLANTING AND IRRIGATION ABBREVIATIONS

STD. PLAN H1

H1

Return to Table of Contents

DIST	COUNTY	ROUTE	KILOMETER POST TOTAL PROJECT	SHEET NO.	TOTAL SHEETS

REGISTERED CIVIL ENGINEER

July 1, 1997
PLANS APPROVAL DATE

The State of California or its officers or agents shall not be responsible for the accuracy or completeness of electronic copies of this plan sheet.

LICENSED LANDSCAPE ARCHITECT
Stanford
7-31-97
Renewal Date
3-24-97
Date
STATE OF CALIFORNIA

Caltrans Metric

EXISTING	PROPOSED	ITEM DESCRIPTION
		WATER METER (BY OTHERS) (WM)
		BACKFLOW PREVENTER ASSEMBLY (BPA)
		BACKFLOW PREVENTER ASSEMBLY IN ENCLOSURE (BPAE)
		BACKFLOW PREVENTER ENCLOSURE (BPE)
		BOOSTER PUMP (BP)
		TRUCK LOADING STANDPIPE (TLS)
FS	FS	FLOW SENSOR (FS)
		MASTER IRRIGATION CONTROLLER (MIC)
		AUXILIARY IRRIGATION CONTROLLER (AIC)
		IRRIGATION CONTROLLER (IC)/ IRRIGATION CONTROLLER (IC) (BATTERY)
		IRRIGATION CONTROLLER(S) IN CONTROLLER ENCLOSURE CABINET (ICC)
		CONTROL AND NEUTRAL CONDUCTORS (CNC)
S	S	SPRINKLER CONTROL CONDUIT
		CONDUIT (COND)
DIP	DIP	DUCTILE IRON PIPE (SUPPLY LINE) (MAIN) (DIP)
		GALVANIZED STEEL PIPE (SUPPLY LINE) (MAIN) (GSP)
		GALVANIZED STEEL PIPE (SUPPLY LINE) (LATERAL) (GSP)
		PLASTIC PIPE (PR 200) (SUPPLY LINE) (MAIN)
		PLASTIC PIPE (PR 200) (SUPPLY LINE) (LATERAL)
		PLASTIC PIPE (IRRIGATION LINE)
		REMOTE CONTROL VALVE (RCV) REMOTE CONTROL VALVE (MASTER) (RCVM)
		MANUAL CONTROL VALVE (MCV)
		VALVE ASSEMBLY UNIT (VAU)
		WYE STRAINER (WS)
		FILTER ASSEMBLY UNIT (FAU)
		GATE VALVE (GV)
		BALL VALVE (BV)

EXISTING	PROPOSED	ITEM DESCRIPTION
		QUICK COUPLING VALVE (QCV)
		PRESSURE REDUCING VALVE (PRV)
		PRESSURE RELIEF VALVE (PRLV)
		FLOW CONTROL VALVE (FCV)
		COMBINATION AIR RELEASE VALVE (CARV)
		CHECK VALVE (CV)
		FLUSH VALVE (FV)
		NOZZLE LINE W/TURNING UNION
		IRRIGATION SYSTEM
		IRRIGATION SYSTEM TO BE REMOVED
		CHAIN LINK GATE
		QUICK COUPLING VALVE W/SPRINKLER PROTECTOR
3	3	SPRINKLER W/SPRINKLER PROTECTOR
		CONNECT TO EXISTING SYSTEM
		CAP
		CAP EXISTING

VALVE CODE

RCV SIZE (mm)
IRRIGATION CONTROLLER
CONTROLLER STATION
VALVE IN PARALLEL (IF APPLICABLE)
L/min
QUANTITY OF TYPE C, D, OR E SPRINKLERS

* 63.5-A-2b-151.4 -60

MCV SIZE (mm)
VALVE NUMBER
L/min
QUANTITY OF TYPE C, D, OR E SPRINKLERS

* 50.8-3-113.5 -50

* VALVE CODES FOR EXISTING VALVES ARE SHOWN IN A DASHED ENCLOSURE.

STATE OF CALIFORNIA
DEPARTMENT OF TRANSPORTATION

PLANTING AND IRRIGATION SYMBOLS

H2

STD. PLAN H2

Return to Table of Contents

DIST	COUNTY	ROUTE	KILOMETER POST TOTAL PROJECT	SHEET NO.	TOTAL SHEETS

Metric

REGISTERED CIVIL ENGINEER

July 1, 1997
PLANS APPROVAL DATE

The State of California or its officers or agents shall not be responsible for the accuracy or completeness of electronic copies of this plan sheet.

LICENSED LANDSCAPE ARCHITECT
Dwight E. Sanderson
No. 2136
5-24-97
DATE
STATE OF CALIFORNIA

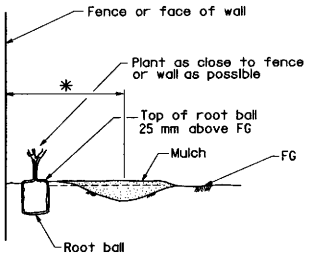

SECTION
(FLAT AREA)

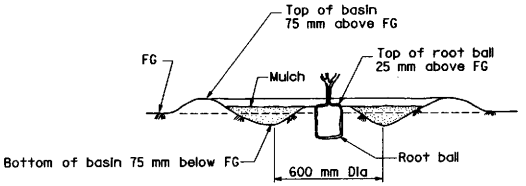

SECTION
(FLAT AREA)

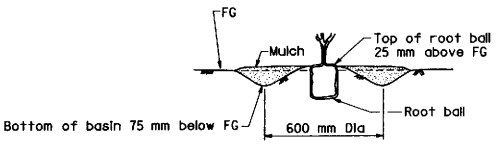

SECTION
(FLAT AREA)

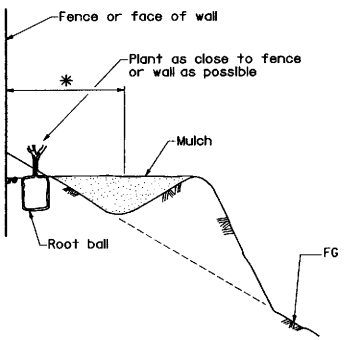

SECTION
(SLOPE AREA)

BASIN TYPE III

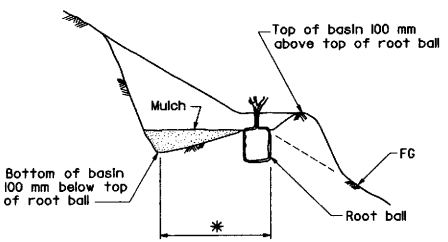

SECTION
(SLOPE AREA)

BASIN TYPE II

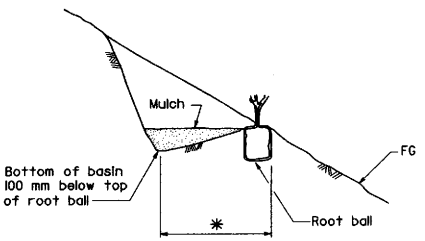

SECTION
(SLOPE AREA)

BASIN TYPE I

* Basin area equivalent to 600 mm Dia

STATE OF CALIFORNIA
DEPARTMENT OF TRANSPORTATION

PLANTING AND IRRIGATION DETAILS

NO SCALE

ALL DIMENSIONS ARE IN MILLIMETERS UNLESS OTHERWISE SHOWN

H3

STD. PLAN H3

Return to Table of Contents

DIST	COUNTY	ROUTE	KILOMETER POST TOTAL PROJECT	SHEET NO.	TOTAL SHEETS

Metric

REGISTERED CIVIL ENGINEER

July 1, 1997
PLANS APPROVAL DATE

The State of California or its officers or agents shall not be responsible for the accuracy or completeness of electronic copies of this plan sheet.

LICENSED LANDSCAPE ARCHITECT — STATE OF CALIFORNIA

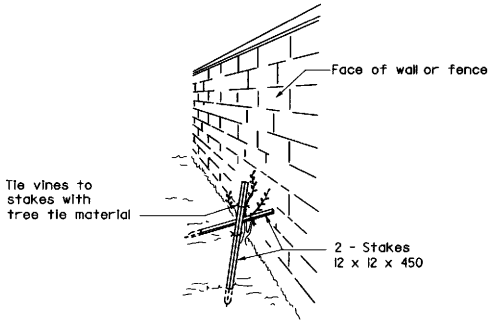

PERSPECTIVE

VINE STAKING

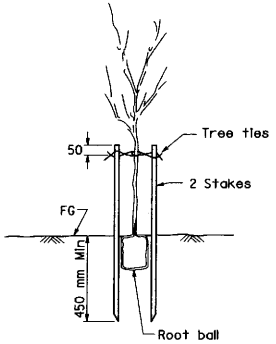

SECTION

TREE STAKING

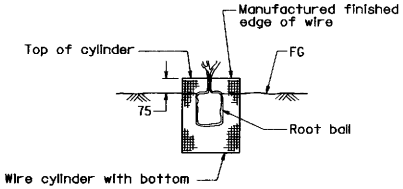

SECTION

ROOT PROTECTOR

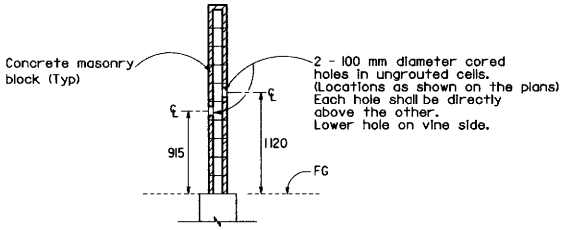

SECTION

CORE HOLE (PLANT)

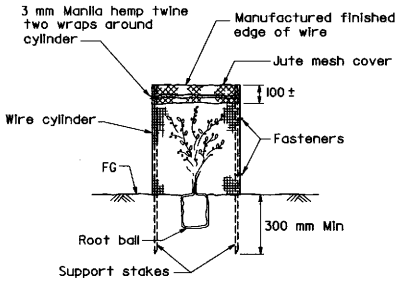

SECTION

FOLIAGE PROTECTOR

STATE OF CALIFORNIA
DEPARTMENT OF TRANSPORTATION

PLANTING AND IRRIGATION DETAILS

NO SCALE

ALL DIMENSIONS ARE IN MILLIMETERS UNLESS OTHERWISE SHOWN

H4

STD. PLAN H4

Return to Table of Contents

DIST	COUNTY	ROUTE	KILOMETER POST TOTAL PROJECT	SHEET NO.	TOTAL SHEETS

REGISTERED CIVIL ENGINEER

July 1, 1997
PLANS APPROVAL DATE

The State of California or its officers or agents shall not be responsible for the accuracy or completeness of electronic copies of this plan sheet.

LICENSED LANDSCAPE ARCHITECT
Dawn T. Grinstein 2428
Expires 7-31-97
Renewal Date 3-24-97
Date
STATE OF CALIFORNIA

Metric

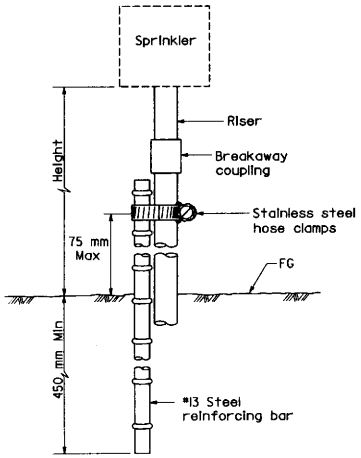

ELEVATION

RISER TYPE IV

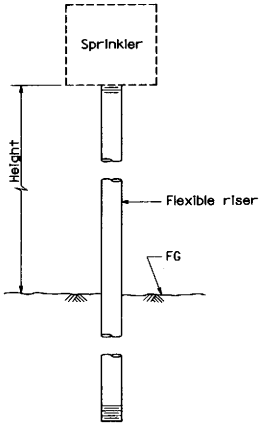

ELEVATION

RISER TYPE III

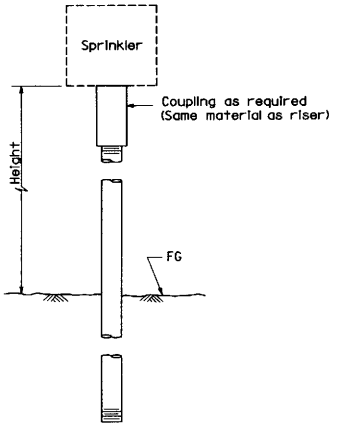

ELEVATION

RISER TYPE II

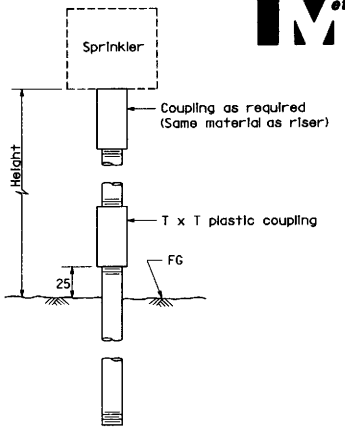

ELEVATION

RISER TYPE I

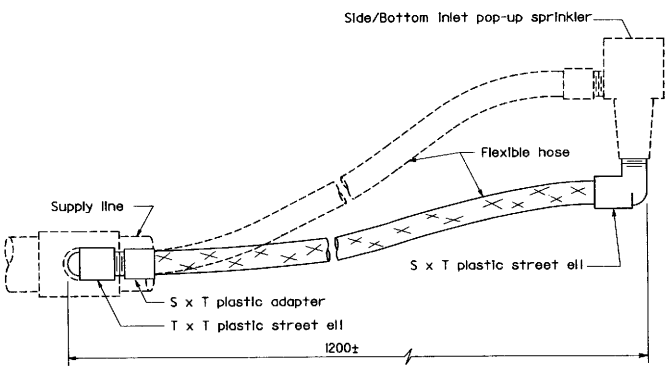

ELEVATION

RISER TYPE VI

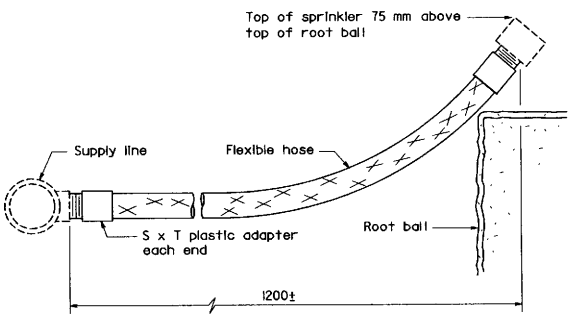

ELEVATION

RISER TYPE V

STATE OF CALIFORNIA
DEPARTMENT OF TRANSPORTATION

PLANTING AND IRRIGATION DETAILS

NO SCALE

ALL DIMENSIONS ARE IN MILLIMETERS UNLESS OTHERWISE SHOWN

H5

STD. PLAN H5

Return to Table of Contents

DIST	COUNTY	ROUTE	KILOMETER POST TOTAL PROJECT	SHEET NO.	TOTAL SHEETS

REGISTERED CIVIL ENGINEER

July 1, 1997
PLANS APPROVAL DATE

The State of California or its officers or agents shall not be responsible for the accuracy or completeness of electronic copies of this plan sheet.

LICENSED LANDSCAPE ARCHITECT — STATE OF CALIFORNIA — 1-31-97

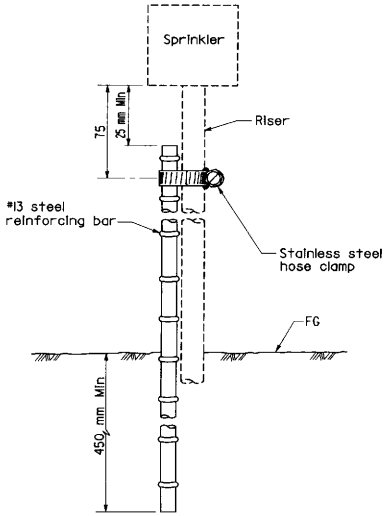

ELEVATION

RISER SUPPORT

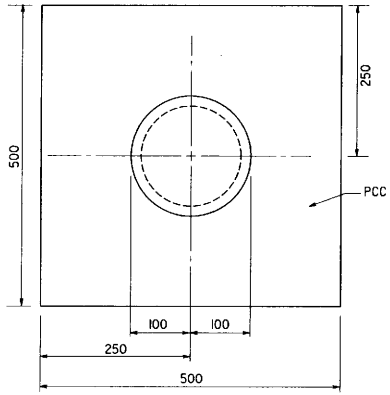

PLAN

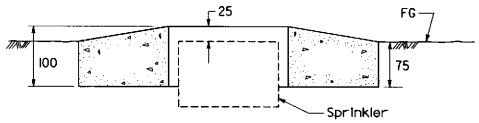

SECTION

SPRINKLER PROTECTOR TYPE II

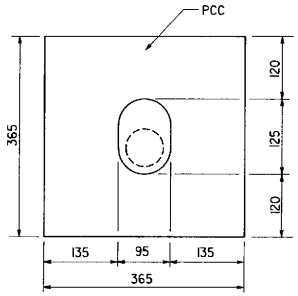

PLAN

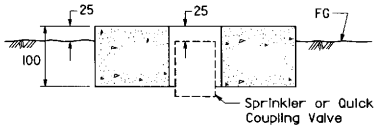

SECTION

SPRINKLER PROTECTOR TYPE I

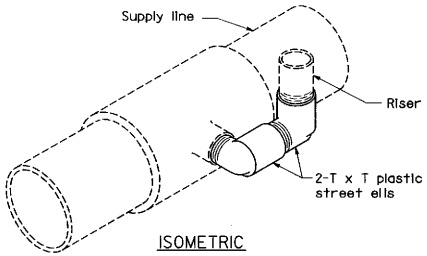

ISOMETRIC

SWING JOINT TYPE III

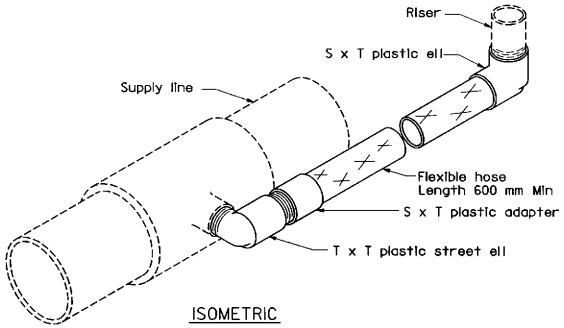

ISOMETRIC

SWING JOINT TYPE II

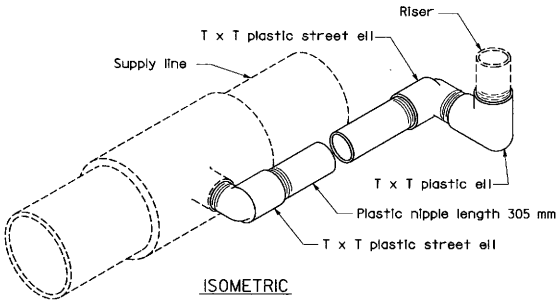

ISOMETRIC

SWING JOINT TYPE I

STATE OF CALIFORNIA
DEPARTMENT OF TRANSPORTATION

PLANTING AND IRRIGATION DETAILS

NO SCALE

ALL DIMENSIONS ARE IN MILLIMETERS UNLESS OTHERWISE SHOWN

H6

Return to Table of Contents

DIST	COUNTY	ROUTE	KILOMETER POST TOTAL PROJECT	SHEET NO.	TOTAL SHEETS

REGISTERED CIVIL ENGINEER

July 1, 1997
PLANS APPROVAL DATE

The State of California or its officers or agents shall not be responsible for the accuracy or completeness of electronic copies of this plan sheet.

LICENSED LANDSCAPE ARCHITECT
Gary L. Gunderson
No. 2422
7-31-97
Renewal Date
1-24-97
Date
STATE OF CALIFORNIA

Caltrans Metric

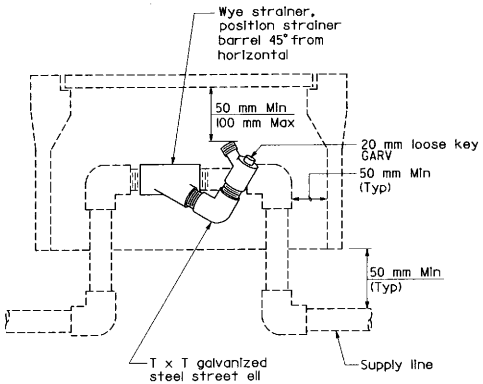

ELEVATION

WYE STRAINER

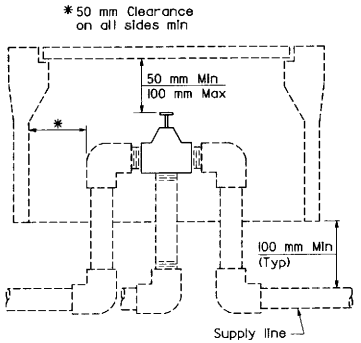

ELEVATION

VALVE

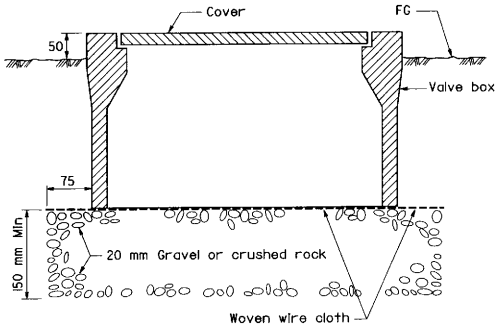

SECTION

VALVE BOX

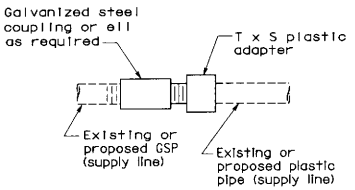

PLAN

GALVANIZED AND PLASTIC PIPE CONNECTION

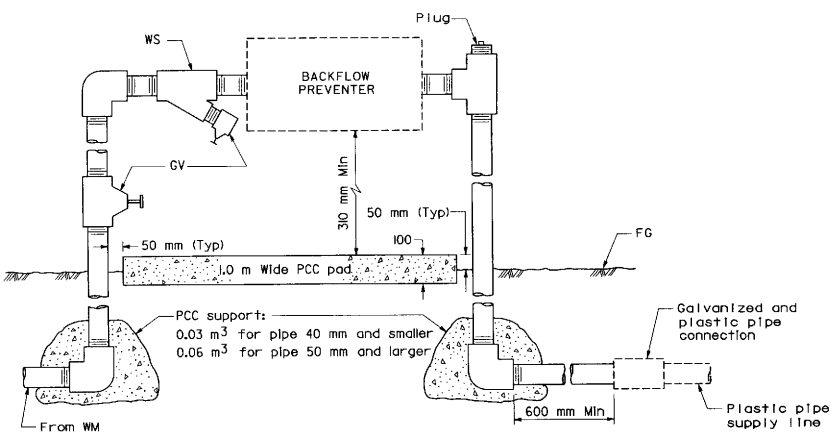

ELEVATION

BACKFLOW PREVENTER ASSEMBLY

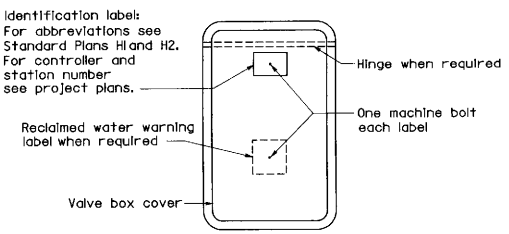

PLAN

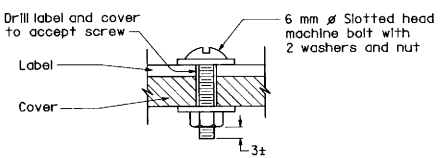

SECTION

VALVE BOX IDENTIFICATION

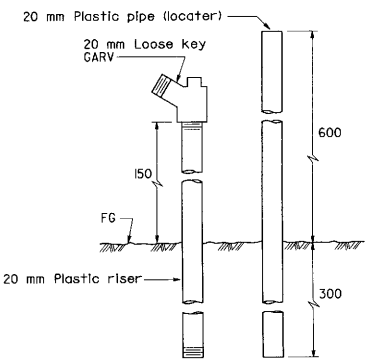

ELEVATION

FLUSH VALVE

STATE OF CALIFORNIA
DEPARTMENT OF TRANSPORTATION

PLANTING AND IRRIGATION DETAILS

NO SCALE

ALL DIMENSIONS ARE IN MILLIMETERS UNLESS OTHERWISE SHOWN

H7

STD. PLAN H7

Return to Table of Contents

DIST	COUNTY	ROUTE	KILOMETER POST TOTAL PROJECT	SHEET NO.	TOTAL SHEETS

Caltrans Metric

REGISTERED CIVIL ENGINEER

July 1, 1997
PLANS APPROVAL DATE

The State of California or its officers or agents shall not be responsible for the accuracy or completeness of electronic copies of this plan sheet.

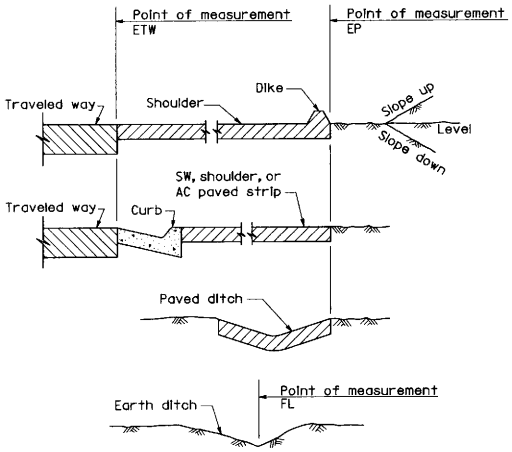

SECTION

POINTS OF MEASUREMENT

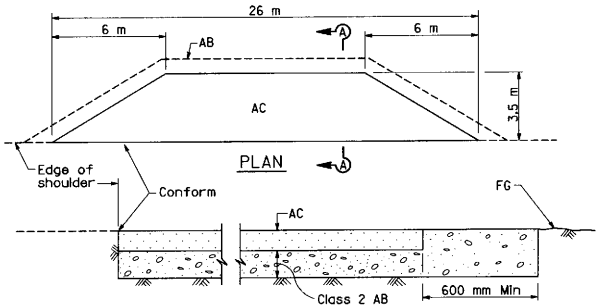

SECTION A-A

MAINTENANCE VEHICLE PULLOUT

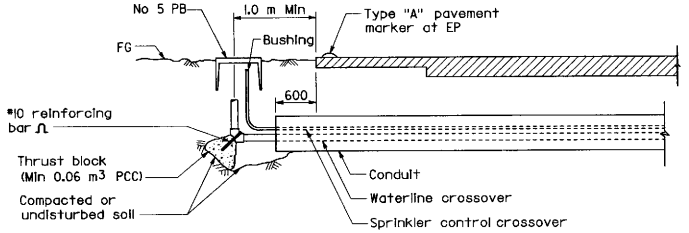

SECTION

WELDED STEEL PIPE CONDUIT
(JACKED OR DRILLED)

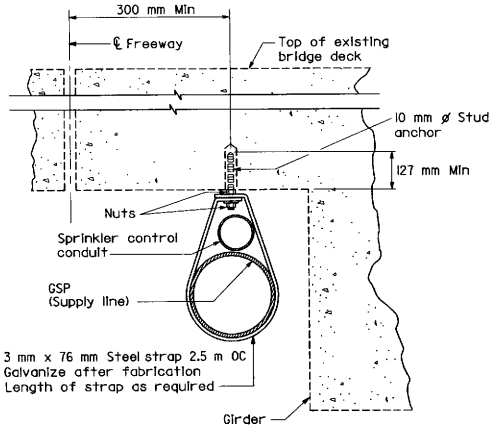

PIPE ANCHOR TYPE II

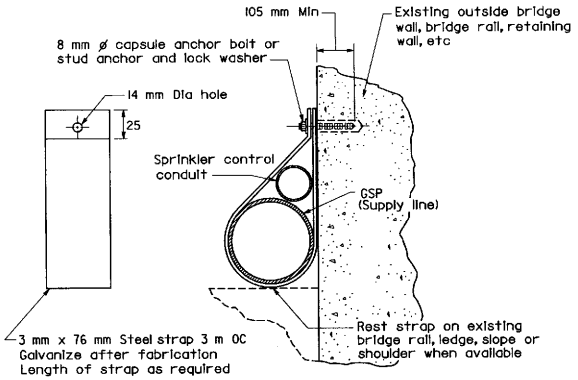

PIPE ANCHOR TYPE I

STATE OF CALIFORNIA
DEPARTMENT OF TRANSPORTATION

PLANTING AND IRRIGATION DETAILS

NO SCALE

ALL DIMENSIONS ARE IN
MILLIMETERS UNLESS OTHERWISE SHOWN

H8

STD. PLAN H8

Return to Table of Contents

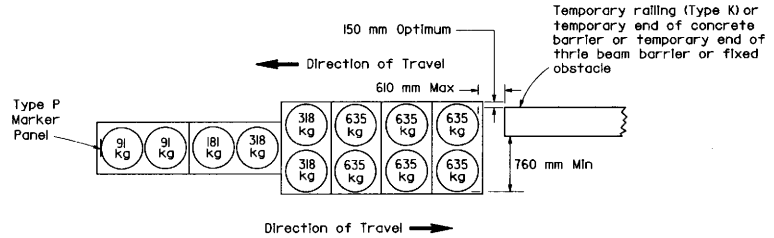

ARRAY 'TA'

(APPROACH SPEED 70 km/h OR GREATER)

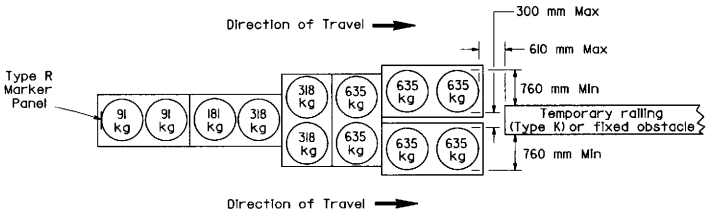

ARRAY 'TB'

(APPROACH SPEED 70 km/h OR GREATER)

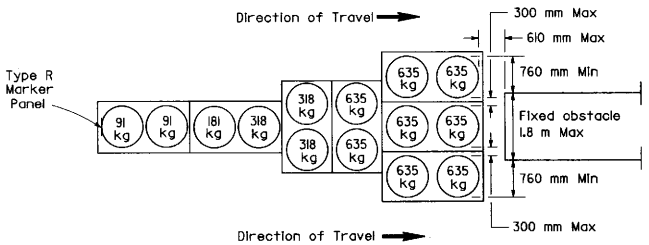

ARRAY 'TC'

(APPROACH SPEED 70 km/h OR GREATER)

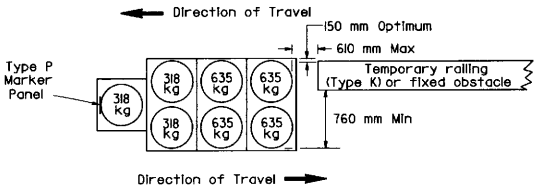

ARRAY 'TD'

(APPROACH SPEED 65 km/h OR LESS)
(FOR SPEEDS GREATER THAN 65 km/h USE ARRAY 'TA')

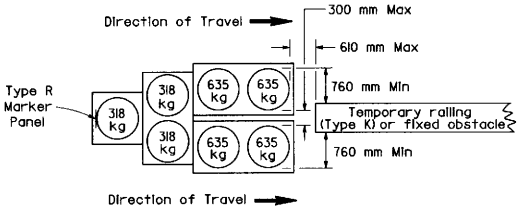

ARRAY 'TE'

(APPROACH SPEED 65 km/h OR LESS)
(FOR SPEEDS GREATER THAN 65 km/h USE ARRAY 'TB')

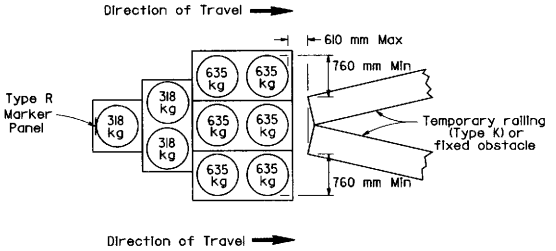

ARRAY 'TF'

(APPROACH SPEED 65 km/h OR LESS)
(FOR SPEEDS GREATER THAN 65 km/h USE ARRAY 'TC')

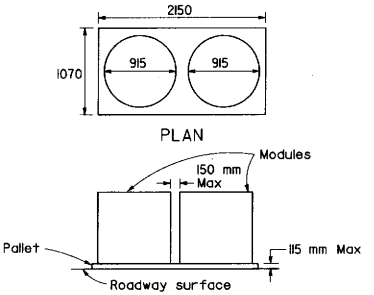

CRASH CUSHION PALLET DETAIL

NOTES

1. (XXX) Indicates module location and weight of sand for each module.
2. All sand weights are nominal.

DIST	COUNTY	ROUTE	KILOMETER POST TOTAL PROJECT	SHEET NO.	TOTAL SHEETS

California Metric

Donald E Fogle
REGISTERED CIVIL ENGINEER

July 1, 1997
PLANS APPROVAL DATE

REGISTERED PROFESSIONAL ENGINEER Donald E. Fogle No. C34637 Exp. 9-30-99 CIVIL STATE OF CALIFORNIA

The State of California or its officers or agents shall not be responsible for the accuracy or completeness of electronic copies of this plan sheet.

STATE OF CALIFORNIA
DEPARTMENT OF TRANSPORTATION

TEMPORARY CRASH CUSHION SAND FILLED

NO SCALE

ALL DIMENSIONS ARE IN MILLIMETERS UNLESS OTHERWISE SHOWN

T1

STD. PLAN T1

Return to Table of Contents

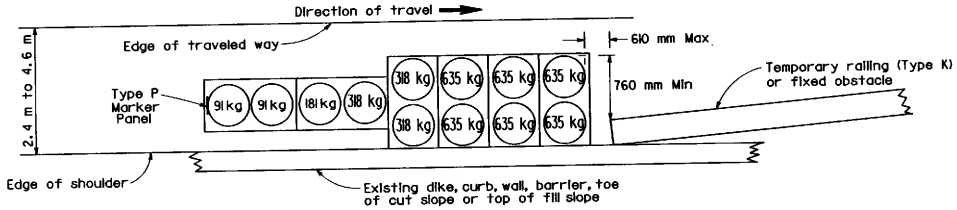

ARRAY 'TG'

(APPROACH SPEED 70 km/h OR GREATER)

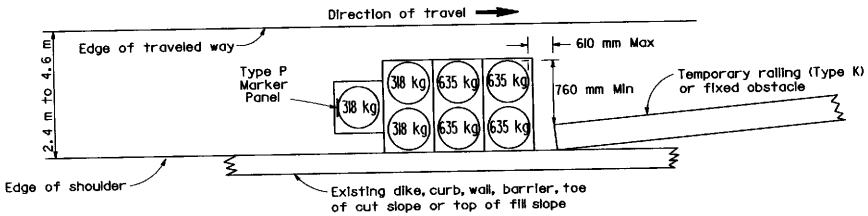

ARRAY 'TH'

(APPROACH SPEED 65 km/h OR LESS)
(FOR SPEEDS GREATER THAN 65 km/h USE ARRAY 'TG')

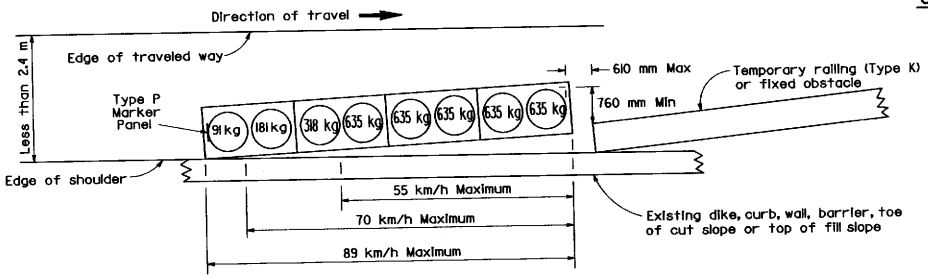

ARRAY 'TJ'

(APPROACH SPEED LESS THAN 90 km/h AND SHOULDER WIDTHS LESS THAN 2.4 m)
(SEE NOTE 9 FOR APPROACH SPEEDS 90 km/h OR GREATER AND SHOULDER WIDTHS LESS THAN 2.4 m)

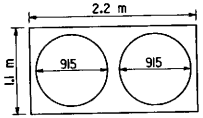

PLAN

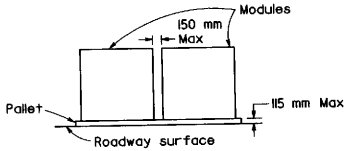

ELEVATION

CRASH CUSHION PALLET DETAIL

DIST	COUNTY	ROUTE	KILOMETER POST TOTAL PROJECT	SHEET NO.	TOTAL SHEETS

Donald E Fogle
REGISTERED CIVIL ENGINEER

July 1, 1997
PLANS APPROVAL DATE

REGISTERED PROFESSIONAL ENGINEER Donald E Fogle No. C34637 Exp. 9-30-99 CIVIL STATE OF CALIFORNIA

The State of California or its officers or agents shall not be responsible for the accuracy or completeness of electronic copies of this plan sheet.

NOTES

1. (XXX) indicates sand filled module location and mass of sand in kilograms for each module.
2. All sand masses are nominal.
3. A single row of modules similar to those shown for array 'TJ' shall be used only in locations where there will be traffic on one side of the temporary crash cushion array and for speeds less than 90 km/h.
4. If the fixed obstacle or approach end of the temporary railing is less than 4.60 meters from the edge of traveled way, a temporary crash cushion is required.
5. Temporary crash cushion arrays shall not encroach on the traveled way.
6. Arrays for median shoulders shall conform to details shown on this plan for outside shoulders.
7. Place P marker panel so that the panel is 25 mm below the crash cushion lid and faces traffic. Place the Type P marker panel so that the bottom of the panel rests upon the pallet and faces traffic.
8. Refer to Standard Plan A73B for marker details.
9. For approach speed of 90 km/h or greater and shoulder widths less than 2.4 m, appropriate crash cushion protection shall be provided at fixed obstacles and at approach ends of temporary railing. The specific type of crash cushion protection shall be as shown on the project plans or as specified in the special provisions, or if not shown on the project plans or specified in the special provisions, shall be as approved by the Engineer.
10. Array 'TI' has been deleted.

STATE OF CALIFORNIA
DEPARTMENT OF TRANSPORTATION

TEMPORARY CRASH CUSHION SAND FILLED

NO SCALE

ALL DIMENSIONS ARE IN MILLIMETERS UNLESS OTHERWISE SHOWN

T2

STD. PLAN T2

Return to Table of Contents

DIST	COUNTY	ROUTE	KILOMETER POST TOTAL PROJECT	SHEET NO.	TOTAL SHEETS

Robert C. Anderson
REGISTERED CIVIL ENGINEER

July 1, 1997
PLANS APPROVAL DATE

REGISTERED PROFESSIONAL ENGINEER R. C. Anderson No. 17180 Exp. 6-30-97 CIVIL STATE OF CALIFORNIA

The State of California or its officers or agents shall not be responsible for the accuracy or completeness of electronic copies of this plan sheet.

Metric

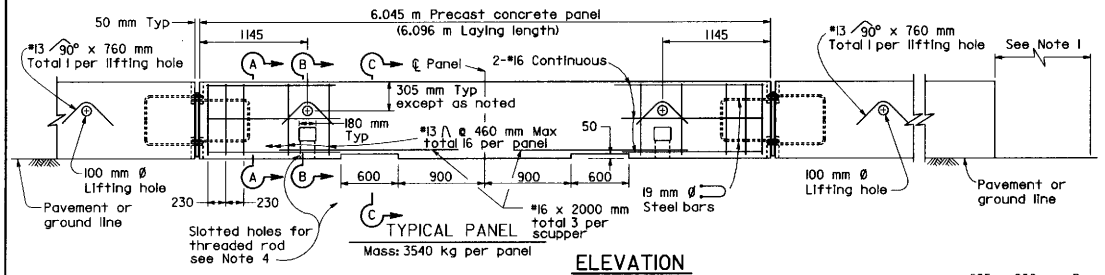

TYPICAL PANEL
Mass: 3540 kg per panel

ELEVATION

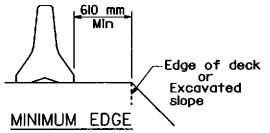

MINIMUM EDGE DISTANCE

NOTES

1. For end treatment, layout and crash cushions, where needed, see Project Plans or Special Provisions.
2. All 90 mm gaps at removable panels are to be backed at the base with *25 x 260 mm dowel or 25.4 mm Ø pin each side of joint. See Section G-G.
3. Where Temporary Railing (Type K) is placed on curves and radii that are too severe to connect panels with bolted joints, the railing is to be backed continuously with earth fill. See Section F-F.
4. Attach units to deck slabs when required by Bridge Plans.

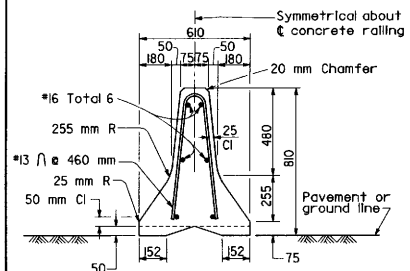

SECTION A-A

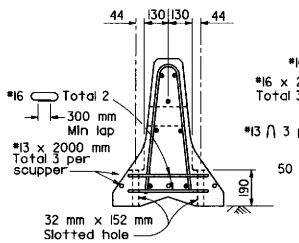

SECTION B-B

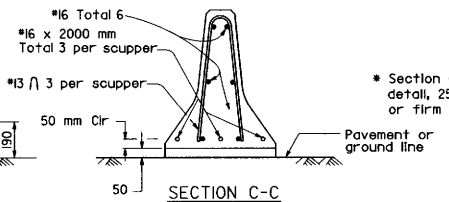

SECTION C-C

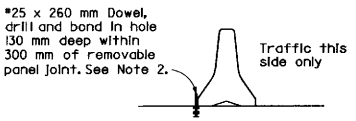

SECTION G-G *

* Section G-G is for PCC pavement. Alternative detail, 25.4 mm Ø pins 610 mm long driven in AC or firm soil permitted, minimum 460 mm deep.

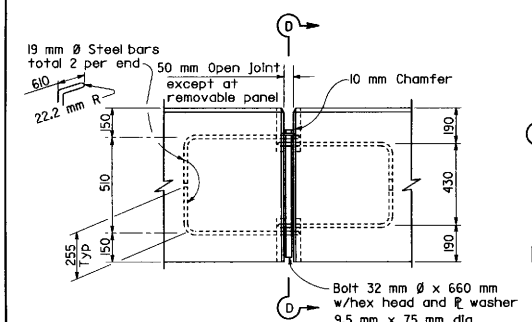

ELEVATION

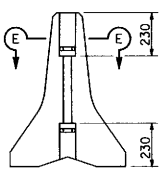

VIEW D-D

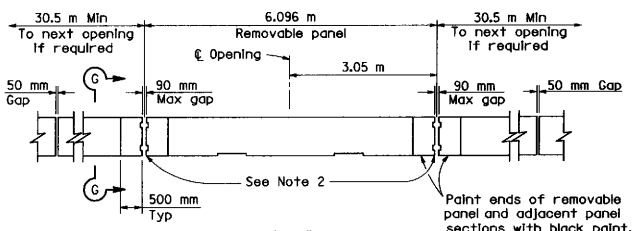

ELEVATION

TYPICAL OPENING DETAIL

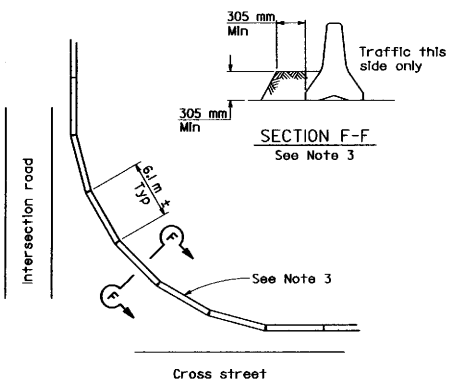

CURVED LAYOUT

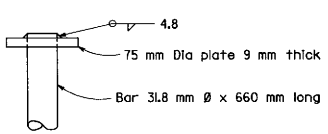

ALTERNATIVE HEAD DETAIL

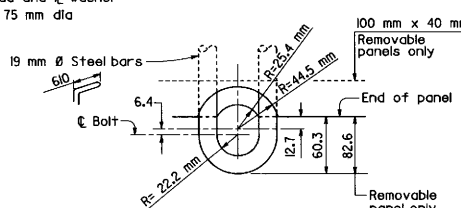

SECTION E-E

BOLT CONNECTION DETAIL

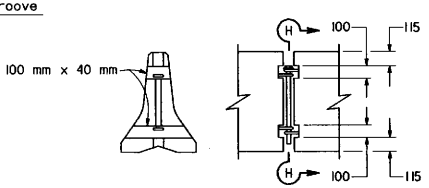

SECTION H-H ELEVATION

REMOVABLE PANEL GROOVE DETAILS

STATE OF CALIFORNIA
DEPARTMENT OF TRANSPORTATION

TEMPORARY RAILING (TYPE K)

NO SCALE

ALL DIMENSIONS ARE IN MILLIMETERS UNLESS OTHERWISE SHOWN

T3

Return to Table of Contents

DIST	COUNTY	ROUTE	KILOMETER POST TOTAL PROJECT	SHEET NO.	TOTAL SHEETS

REGISTERED CIVIL ENGINEER

July 1, 1997
PLANS APPROVAL DATE

REGISTERED PROFESSIONAL ENGINEER Gerry Mele No. C18915 Exp. 6-30-01 CIVIL STATE OF CALIFORNIA

The State of California or its officers or agents shall not be responsible for the accuracy or completeness of electronic copies of this plan sheet.

California Metric

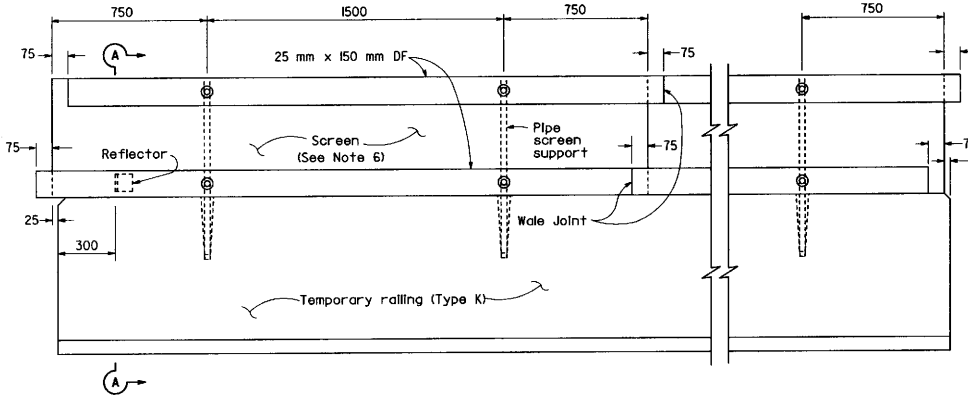

ELEVATION

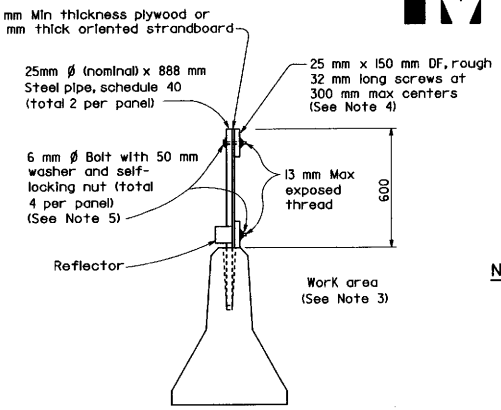

SECTION A-A

NOTE

1. Straight holes 38 mm Ø of the depth shown may be used in lieu of the tapered holes.
2. Resin capsule-type anchorage devices may be substituted for threaded rods.
3. Place screen on work area side of the temporary railing where traffic will only be on one side of the temporary railing. Where traffic will be on both sides of the temporary railing, the screen may be placed on either side of the pipe support.
4. Clinched 8d box nails may be substituted for screws. The nails shall be clinched on the work area side of the screen where traffic will only be on one side of the temporary railing.
5. U-bolts may be substituted for 6 mm Ø bolts.
6. Openings in the screen of 1.0 m length shall be provided at 60 m intervals.

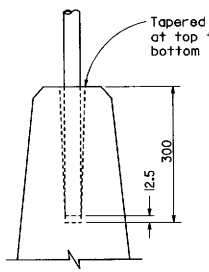

SCREEN ANCHORAGE DETAIL

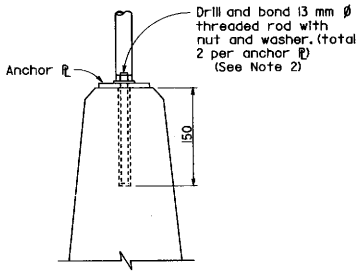

SCREEN ANCHORAGE DETAIL
ALTERNATIVE 'A'

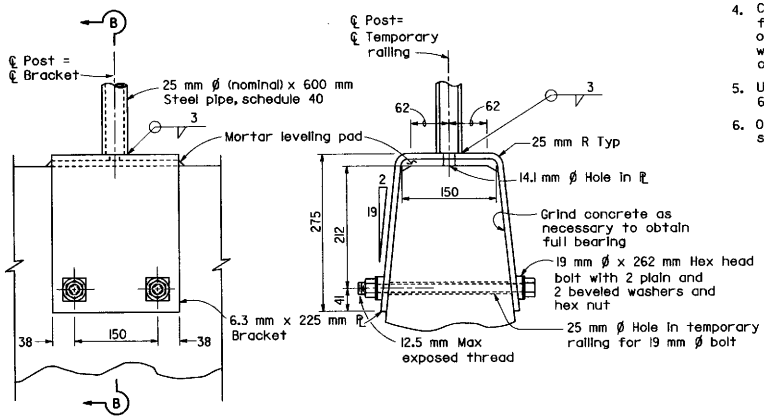

ELEVATION

SECTION B-B

SCREEN ANCHORAGE DETAIL
ALTERNATIVE 'B'

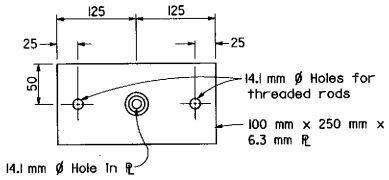

PLAN

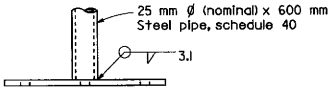

ELEVATION

ANCHOR PLATE DETAIL
ALTERNATIVE 'A'

STATE OF CALIFORNIA
DEPARTMENT OF TRANSPORTATION

TEMPORARY TRAFFIC SCREEN

NO SCALE

ALL DIMENSIONS ARE IN
MILLIMETERS UNLESS OTHERWISE SHOWN

T4

STD. PLAN T4

Return to Table of Contents

DIST	COUNTY	ROUTE	KILOMETER POST TOTAL PROJECT	SHEET NO.	TOTAL SHEETS

Donald E Fogle
REGISTERED CIVIL ENGINEER

July 1, 1997
PLANS APPROVAL DATE

REGISTERED PROFESSIONAL ENGINEER Donald E. Fogle No. C34637 Exp. 9-30-99 CIVIL STATE OF CALIFORNIA

The State of California or its officers or agents shall not be responsible for the accuracy or completeness of electronic copies of this plan sheet.

Metric

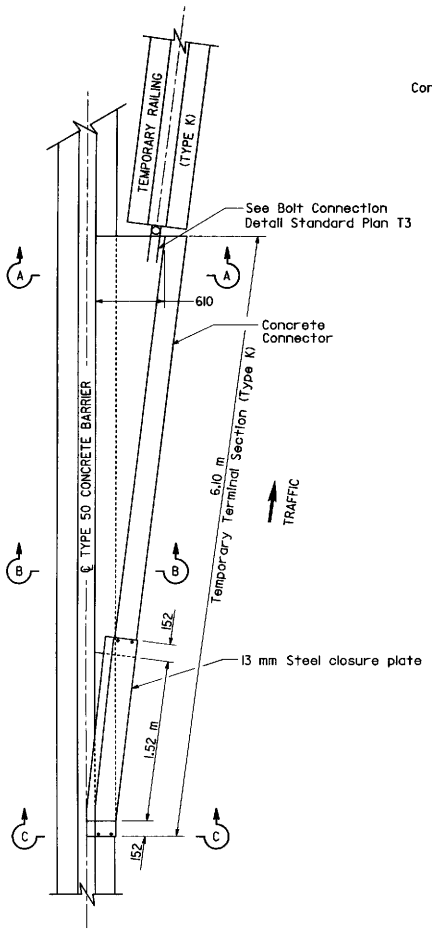

PLAN

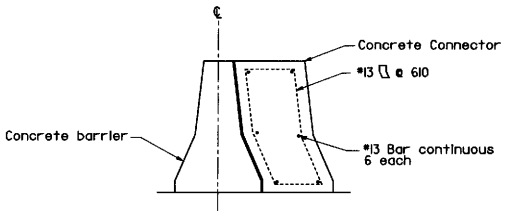

SECTION A-A

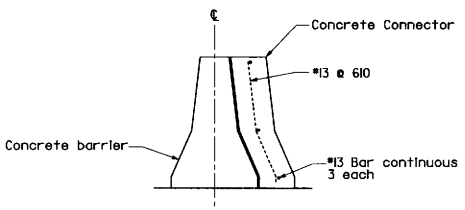

SECTION B-B

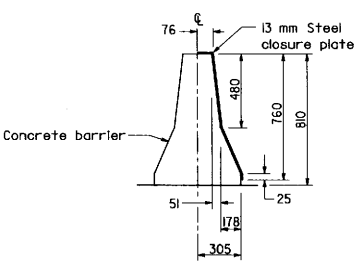

SECTION C-C

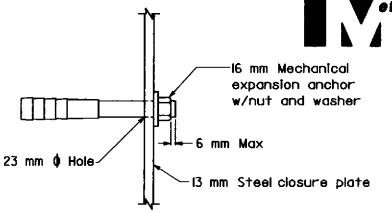

CLOSURE PLATE
ANCHOR BOLT DETAIL

NOTE

1. If lifting holes are used with the concrete connector, they shall conform to the lifting hole details shown on Standard Plan T3.
2. Paint closure plate white.
3. When the temporary terminal section (Type K) is no longer required and is to be removed, the anchor bolts connecting the closure plate and the barrier shall be removed or cut flush with the face of the concrete barrier. If the anchor bolts are removed, the resulting holes shall be filled with grout.

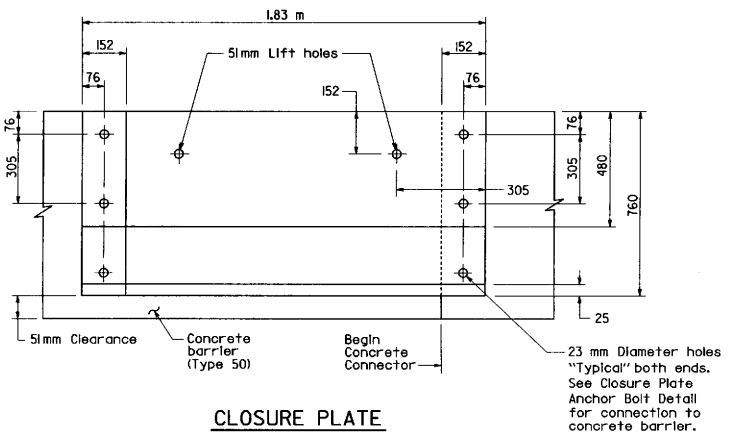

CLOSURE PLATE
(SIDE VIEW)

STATE OF CALIFORNIA
DEPARTMENT OF TRANSPORTATION

TEMPORARY TERMINAL SECTION (TYPE K)

NO SCALE

ALL DIMENSIONS ARE IN MILLIMETERS UNLESS OTHERWISE SHOWN

T5

STD. PLAN T5

Return to Table of Contents

DIST	COUNTY	ROUTE	KILOMETER POST TOTAL PROJECT	SHEET NO.	TOTAL SHEETS

REGISTERED CIVIL ENGINEER

July 1, 1997
PLANS APPROVAL DATE

REGISTERED PROFESSIONAL ENGINEER
Gerry Wels
No. C18915
Exp. 6-30-01
CIVIL
STATE OF CALIFORNIA

The State of California or its officers or agents shall not be responsible for the accuracy or completeness of electronic copies of this plan sheet.

Metric

NOTES

1. ROUTE SHIELD (STATE FURNISHED).
2. THE SIGN MESSAGES SHOWN FOR FUND TYPES ARE EXAMPLES ONLY. SEE THE SPECIAL PROVISIONS FOR THE APPLICABLE FUND TYPE MESSAGES TO BE USED.
3. EXCEPT AS OTHERWISE SHOWN, THE LEGEND OF THE SIGN SHALL BE BLACK ON A WHITE BACKGROUND (NON-REFLECTIVE).
4. THE BORDER OF THE SIGNS AND DETAILS 'A' AND 'C' SHALL BE BLUE (NON-REFLECTIVE).
5. THE DIAMOND IN DETAILS 'B' AND 'D' SHALL BE ORANGE (NON-REFLECTIVE).

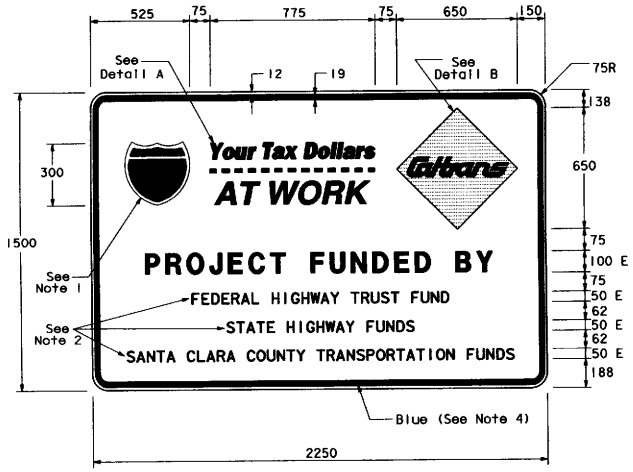

TYPE 1

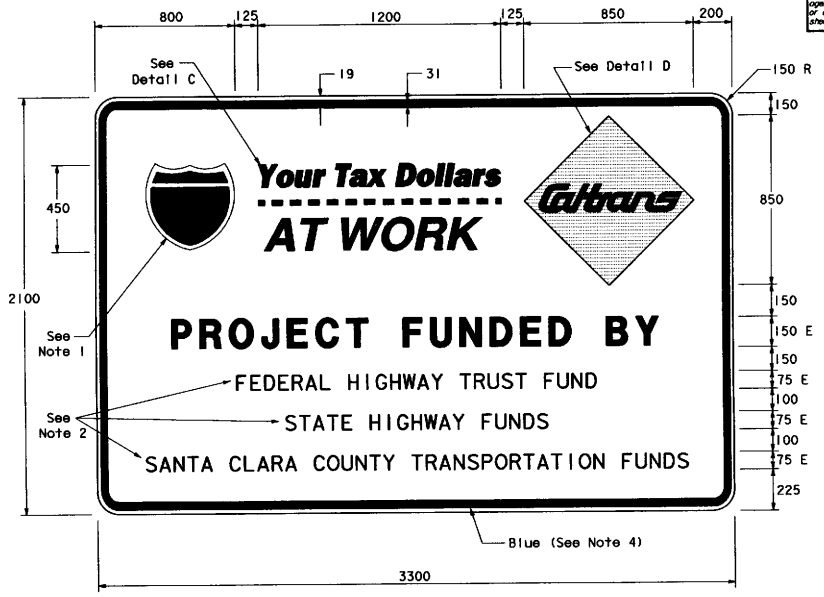

TYPE 2

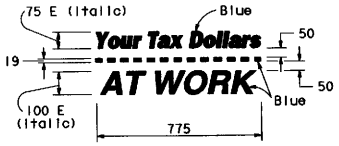

DETAIL A
(See Note 4)

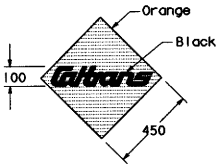

DETAIL B
(See Note 5)

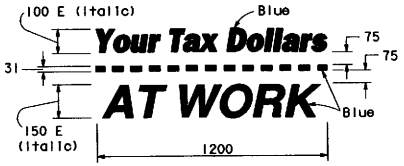

DETAIL C
(See Note 4)

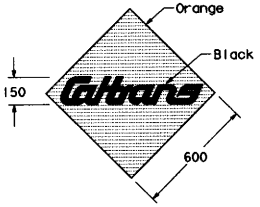

DETAIL D
(See Note 5)

STATE OF CALIFORNIA
DEPARTMENT OF TRANSPORTATION

CONSTRUCTION PROJECT FUNDING INDENTIFICATION SIGNS

NO SCALE

ALL DIMENSIONS ARE IN MILLIMETERS UNLESS OTHERWISE SHOWN

T7

STD. PLAN T7

Return to Table of Contents

DIST	COUNTY	ROUTE	KILOMETER POST TOTAL PROJECT	SHEET NO.	TOTAL SHEETS

REGISTERED CIVIL ENGINEER

July 1, 1997
PLANS APPROVAL DATE

The State of California or its officers or agents shall not be responsible for the accuracy or completeness of electronic copies of this plan sheet.

REGISTERED PROFESSIONAL ENGINEER Gerry Mela No. C18915 Exp. 6-30-01 CIVIL STATE OF CALIFORNIA

Caltrans Metric

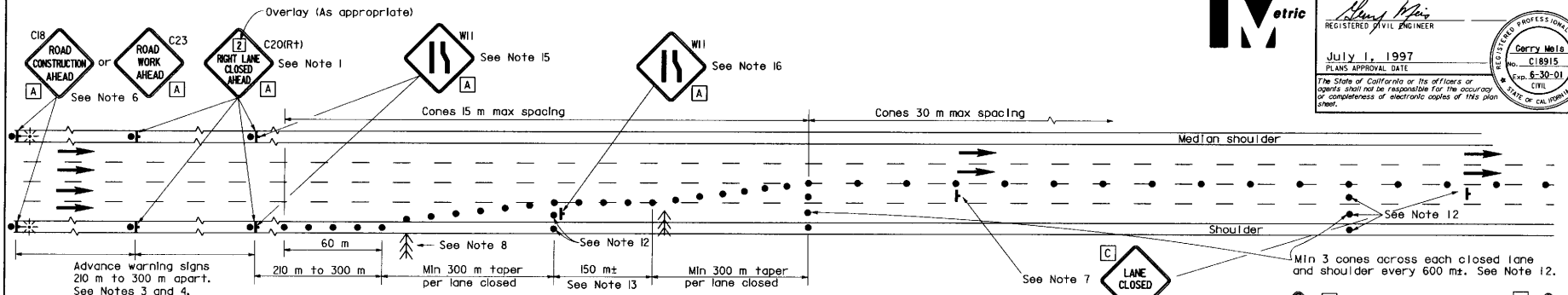

LANE CLOSURE

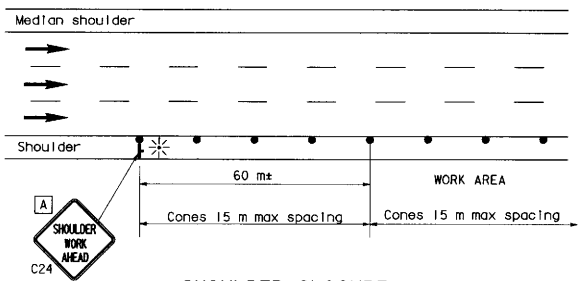

SHOULDER CLOSURE

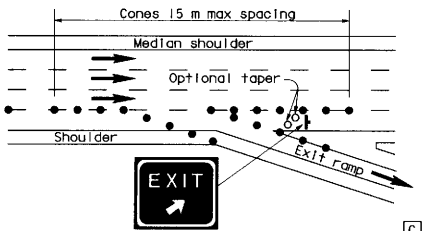

LANE CLOSURE AT EXIT RAMP

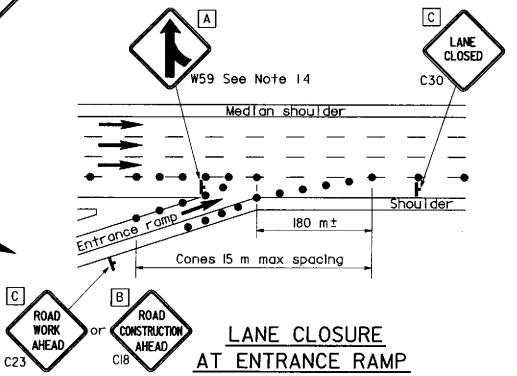

LANE CLOSURE AT ENTRANCE RAMP

NOTES

1. Median lane closures shall conform to the details for outside lane closures except that C20 (Lt) signs shall be used.
2. Not less than one person shall be assigned to full time maintenance of traffic control devices on all night lane closures or day-time closures exceeding 1.6 km in length, including taper.
3. Duplicate sign installations are not required:
   a) On opposite shoulder if at least one-half of the available lanes remain open to traffic.
   b) In the median if the width of the median shoulder is less than 2.4 m and the outside lanes are to be closed.
4. All advance warning sign installations shall be equipped with flags for daytime closures. Flashing beacons shall be placed at the locations indicated during night lane closure.
5. A C13 "END CONSTRUCTION" or C14 "END ROAD WORK" sign, as appropriate, shall be placed at the end of the lane closure unless the end of work area is obvious or ends within a larger project's limits.
6. If the C18 (or C23) sign would follow within 600 m of a stationary C18, C23 or C11 "STATE HIGHWAY CONSTRUCTION NEXT_____ MILES", use a C20 sign for the first advance warning sign.
7. Place a C30 sign every 600 m throughout length of lane closure.
8. One flashing arrow sign for each lane closed. The first flashing arrow sign shall be Type I. All others may be either Type I or Type II.
9. A minimum 450 m of sight distance shall be provided where possible for vehicles approaching the first flashing arrow sign. Lane closures shall not begin at top of crest vertical curve or on a horizontal curve.
10. All cones used for night lane closures shall be fitted with reflective sleeves as specified in the specifications.
11. Portable delineators, placed at one-half the spacing indicated for traffic cones may be used in lieu of cones for daytime closures only.
12. Unless otherwise specified in the special provisions, a minimum of 3 cones shall be placed transversely across each closed lane and shoulder at each location where a taper across a traffic lane ends and every 600 m as shown on the "Lane Closure" detail. Two Type II barricades may be used instead of the 3 cones. The transverse alignment of the cones or barricades on the closed shoulder may be shifted from the transverse alignment to provide access to the work.
13. Unless otherwise specified in the special provisions, the 150 m section of the lane closure shown along lanelines shall be used between the 300 m lane closure tapers when two or more adjacent traffic lanes are to be closed.
14. Unless otherwise specified in the special provisions, the G84 and W59 signs shall be used as shown.
15. Where specified in the special provisions, a W11 "LANE REDUCTION SYMBOL" sign is to be used in place of the C20 "RIGHT LANE CLOSED AHEAD" sign.
16. The W11 "LANE REDUCTION SYMBOL" sign shown at this location is to be used where the W11 sign is used as advance warning as described in Note 15.

SIGN PANEL SIZE (Min)

A	1200 mm x 1200 mm
B	900 mm x 900 mm
C	750 mm x 750 mm

LEGEND

- ● Traffic Cone
- ○ Traffic Cone (optional taper)
- Portable Sign
- Flashing Arrow Sign
- Direction of Travel
- Portable Flashing Beacon

STATE OF CALIFORNIA
DEPARTMENT OF TRANSPORTATION

TRAFFIC CONTROL SYSTEM FOR LANE CLOSURE ON FREEWAYS AND EXPRESSWAYS

NO SCALE

T10

STD. PLAN T10

Return to Table of Contents

DIST	COUNTY	ROUTE	KILOMETER POST TOTAL PROJECT	SHEET NO.	TOTAL SHEETS

REGISTERED CIVIL ENGINEER

July 1, 1997
PLANS APPROVAL DATE

The State of California or its officers or agents shall not be responsible for the accuracy or completeness of electronic copies of this plan sheet.

REGISTERED PROFESSIONAL ENGINEER
Gerry Meis
No. C18915
Exp. 6-30-01
CIVIL
STATE OF CALIFORNIA

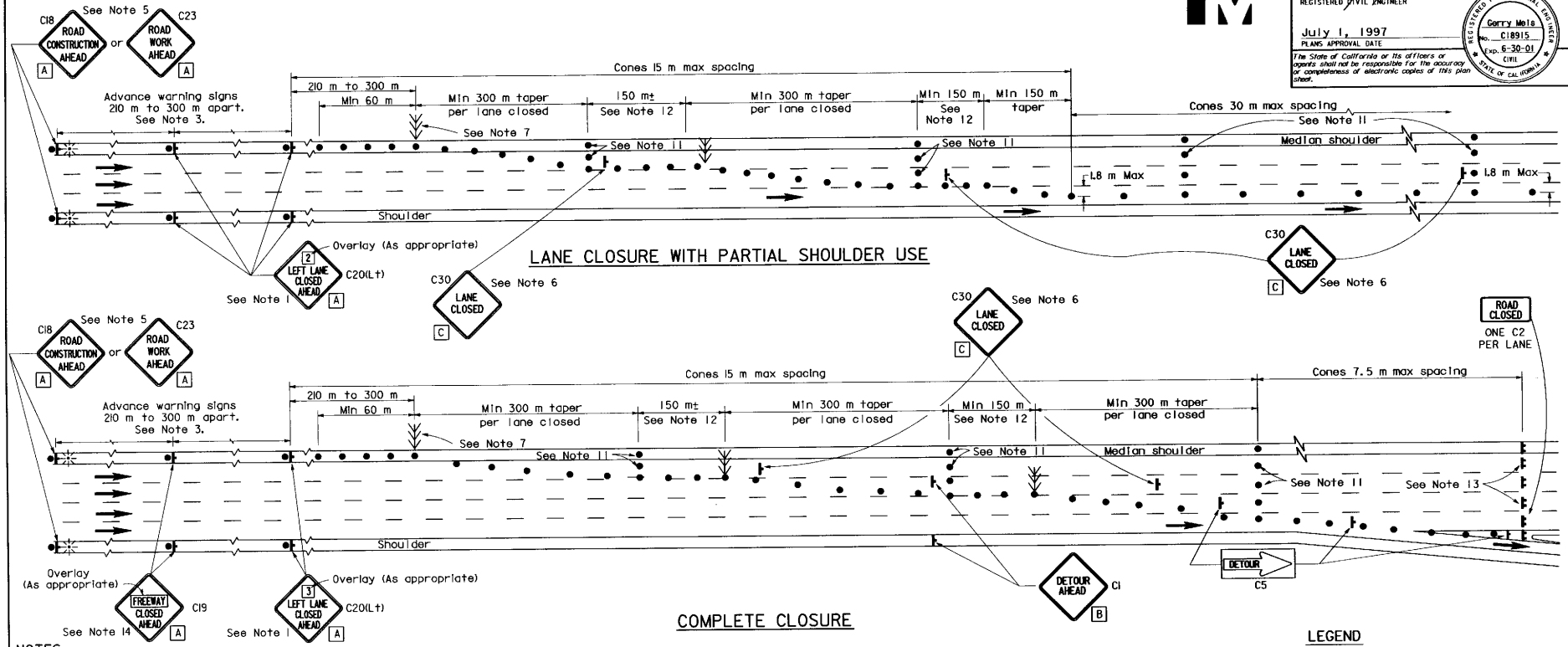

LANE CLOSURE WITH PARTIAL SHOULDER USE

COMPLETE CLOSURE

NOTES

1. Lane closures on the right side using partial median shoulder as a traffic lane shall conform to the details for inside lane closure except that C20(Rt) signs shall be used.
2. Not less than one person shall be assigned to full time maintenance of traffic control devices on all complete closures, on all night lane closures, and daytime closures exceeding 1.6 km in length, including taper.
3. All advance warning sign installations shall be equipped with flags for daytime closure. Flashing beacons shall be placed at the locations indicated during night lane closures.
4. A C13 "END CONSTRUCTION" or C14 "END ROAD WORK" sign, as appropriate, shall be placed at the end of the lane closure unless the end of work area is obvious or ends within a larger project's limits.
5. If the C18 (or C23) sign would follow within 600 m of a stationary C18, C23 or C11 "STATE HIGHWAY CONSTRUCTION NEXT ___ MILES" use a C20 sign for the first advance warning sign.
6. Place a C30 sign every 600 m throughout length of lane closure.
7. One flashing arrow sign for each lane closed. The first flashing arrow sign shall be Type I. All others may be either Type I or Type II.
8. A minimum 450 m of sight distance shall be provided where possible for vehicles approaching the first flashing arrow sign. Lane closures shall not begin at the top of crest vertical curve or on a horizontal curve.
9. All cones used for night lane closures shall be fitted with reflective sleeves as specified in the specifications.
10. Portable delineators, placed at one-half the spacing indicated for traffic cones, may be used in lieu of cones for daytime closures only.
11. Unless otherwise specified in the special provisions, a minimun of 3 cones shall be placed transversely across each closed lane and shoulder at each location where a taper across a traffic lane ends and every 600 m as shown on the "Lane Closure With Partial Shoulder Use" detail. Two Type II barricades may be used instead of the 3 cones. The transverse alignment of the cones or barricades on the closed shoulder may be shifted from the transverse alignment to provide access to the work.
12. Unless otherwise specified in the special provisions, the 150 m section of the lane closure shown along lanelines shall be used between the 300 m lane closure tapers when two or more adjacent traffic lanes are to be closed.
13. A minimum of Two Type II barricades shall be placed across each closed lane and shoulder at the location shown and every 600 m within the complete closure area. Within the complete closure area, the transverse alignment of the barricades on the closed shoulder may be shifted from the transverse alignment to provide access to the work.
14. Where specified in the special provisions, a C1 "DETOUR AHEAD" sign is to be used in place of the C19 "FREEWAY CLOSED AHEAD" sign.

SIGN PANEL SIZE (Min)

A	1200 mm x 1200 mm
B	900 mm x 900 mm
C	750 mm x 750 mm

LEGEND

- Traffic Cone
- Portable Sign
- Flashing Arrow Sign
- Direction of Travel
- Portable Flashing Beacon

STATE OF CALIFORNIA
DEPARTMENT OF TRANSPORTATION

TRAFFIC CONTROL SYSTEM FOR LANE AND COMPLETE CLOSURES ON FREEWAYS AND EXPRESSWAYS

NO SCALE

T10A

Return to Table of Contents

DIST	COUNTY	ROUTE	KILOMETER POST TOTAL PROJECT	SHEET NO.	TOTAL SHEETS

REGISTERED CIVIL ENGINEER

July 1, 1997
PLANS APPROVAL DATE

REGISTERED PROFESSIONAL ENGINEER Gerry Weis No. C18915 Exp. 6-30-01 CIVIL STATE OF CALIFORNIA

The State of California or its officers or agents shall not be responsible for the accuracy or completeness of electronic copies of this plan sheet.

Metric

TYPICAL LANE CLOSURE

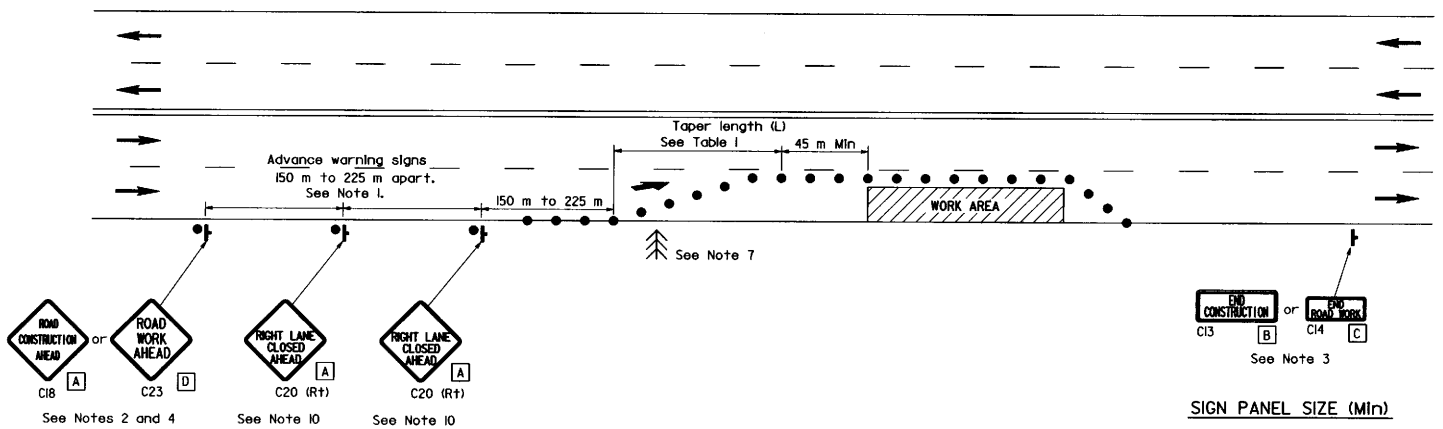

SIGN PANEL SIZE (Min)

- A 900 mm x 900 mm
- B 1200 mm x 450 mm
- C 900 mm x 450 mm
- D 750 mm x 750 mm

LEGEND

- Traffic Cone
- Portable Sign
- Direction of Travel
- Flashing Arrow Sign

NOTES

1. Where approach speeds are low, signs may be placed at 90 m spacing, and in urban areas, closer.
2. All advance warning sign installations shall be equipped with flags for daytime closures.
3. A C13 "END CONSTRUCTION" or C14 "END ROAD WORK" sign, as appropriate, shall be placed at the end of the lane closure unless the end of work area is obvious, or ends within a larger project's limits.
4. If the C18 (or C23) sign would follow within 600 m of a stationary C18, C23, or C11 "STATE HIGHWAY CONSTRUCTION NEXT _____ MILES", use a C20 sign for the first advance warning sign.
5. All cones used for night lane closures shall be fitted with reflective sleeves as specified in the specifications.
6. Portable delineators, placed at one-half the spacing indicated for traffic cones, may be used in lieu of cones for daytime closures only.
7. Flashing arrow sign shall be either Type I or Type II.
8. The maximum spacing between cones in a taper shall be approximately as shown in Table I and 15 m maximum spacing on tangent.
9. For approach speeds over 80 km/h, use the "Traffic Control System for Lane Closure On Freeways And Expressways" plan for lane closure details and requirements.
10. Where specified in the special provisions, a W11 "LANE REDUCTION SYMBOL" sign is to be used in place of the C20 "RIGHT LANE CLOSED AHEAD" sign.

TABLE I

Approach Speed (km/h)	* Taper Length (L) (m)	* Number of Cones for Taper	Spacing of Cones Along Taper (m) ±
0-40	38	6	7.5
40-65	98	9	12
65-80	183	13	15
Over 80	See Note 9		

* Based on 3.6 m wide lane. This column is also appropriate for lane widths less than 3.6 m.

STATE OF CALIFORNIA
DEPARTMENT OF TRANSPORTATION

TRAFFIC CONTROL SYSTEM FOR LANE CLOSURE ON MULTILANE CONVENTIONAL HIGHWAYS

NO SCALE

T11

STD. PLAN T11

Return to Table of Contents

DIST	COUNTY	ROUTE	KILOMETER POST TOTAL PROJECT	SHEET NO.	TOTAL SHEETS

REGISTERED CIVIL ENGINEER

July 1, 1997
PLANS APPROVAL DATE

Gerry Mels
No. C18915
Exp. 6-30-01
CIVIL
REGISTERED PROFESSIONAL ENGINEER
STATE OF CALIFORNIA

The State of California or its officers or agents shall not be responsible for the accuracy or completeness of electronic copies of this plan sheet.

Caltrans Metric

LEGEND

- Traffic Cone
- Portable Sign
- Flashing Arrow Sign
- Direction of Travel
- Portable Flashing Beacon

TYPICAL CLOSING OF HALF ROADWAY

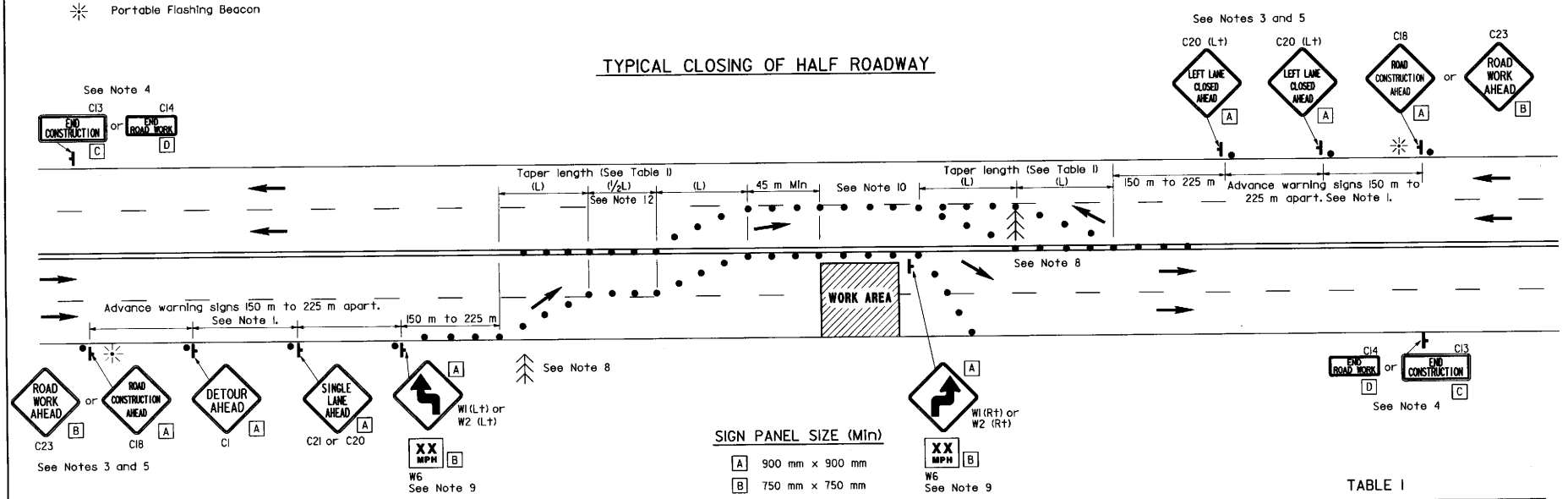

SIGN PANEL SIZE (Min)

A	900 mm x 900 mm
B	750 mm x 750 mm
D	900 mm x 450 mm
C	1200 mm x 450 mm

TABLE I

Approach Speed (Km/h)	* Taper Length (L) (m)	* Number of Cones for Taper	Spacing of Cones Along Taper (m) ±
0-40	38	6	7.5
40-65	98	9	12
65-80	183	13	15
Over 80	See Note 11		

* Based on 3.6 m wide lane. This column is also appropriate for lane widths less than 3.6 m.

NOTES

1. Where Approach speeds are low, signs may be placed at 90 m spacing and, in urban areas, closer.
2. Not less than one person shall be assigned to full time maintenance of traffic control devices on all night lane closures.
3. All advance warning sign installations shall be equipped with flags for daytime closures. Flashing beacons shall be placed at the locations indicated during night lane closures.
4. A C13 "END CONSTRUCTION" or C14 "END ROAD WORK" sign, as appropriate, shall be placed at the end of the lane closure unless the end of work area is obvious, or ends within a larger project's limits.
5. If the C18 (or C23) sign would follow within 600 m of a stationary C18, C23, C1 "STATE HIGHWAY CONSTRUCTION NEXT _____ MILES", use a C20 sign for the first advance warning sign.
6. All cones used for night lane closures shall be fitted with reflective sleeves as specified in the specifications.
7. Portable delineators, placed at one-half the spacing indicated for traffic cones, may be used in lieu of cones for daytime closures only.
8. Flashing arrow signs shall be either Type I or Type II.
9. Advisory speed will be determined by the Engineer. The W6 Sign will not be required when advisory speed is more than the posted or maximum speed limit.
10. The maximum spacing between cones within a taper shall be approximately as shown in Table I and the maximum spacing on tangent shall be 15 m.
11. For approach speeds over 80 km/h, use the "Traffic Control System For Lane Closure On Freeways And Expressways" plan for lane closure details and requirements.
12. Unless otherwise specified in the special provisions, the (1/2L) shown between the two (L) lane closure tapers shall be used.

STATE OF CALIFORNIA
DEPARTMENT OF TRANSPORTATION

TRAFFIC CONTROL SYSTEM FOR LANE CLOSURE ON MULTILANE CONVENTIONAL HIGHWAYS

NO SCALE

T12

STD. PLAN T12

Return to Table of Contents

DIST	COUNTY	ROUTE	KILOMETER POST TOTAL PROJECT	SHEET NO.	TOTAL SHEETS

Caltrans Metric

REGISTERED CIVIL ENGINEER

July 1, 1997
PLANS APPROVAL DATE

REGISTERED PROFESSIONAL ENGINEER Gerry Mels No. C18915 Exp. 6-30-01 CIVIL STATE OF CALIFORNIA

The State of California or its officers or agents shall not be responsible for the accuracy or completeness of electronic copies of this plan sheet.

TYPICAL LANE CLOSURE WITH REVERSIBLE CONTROL

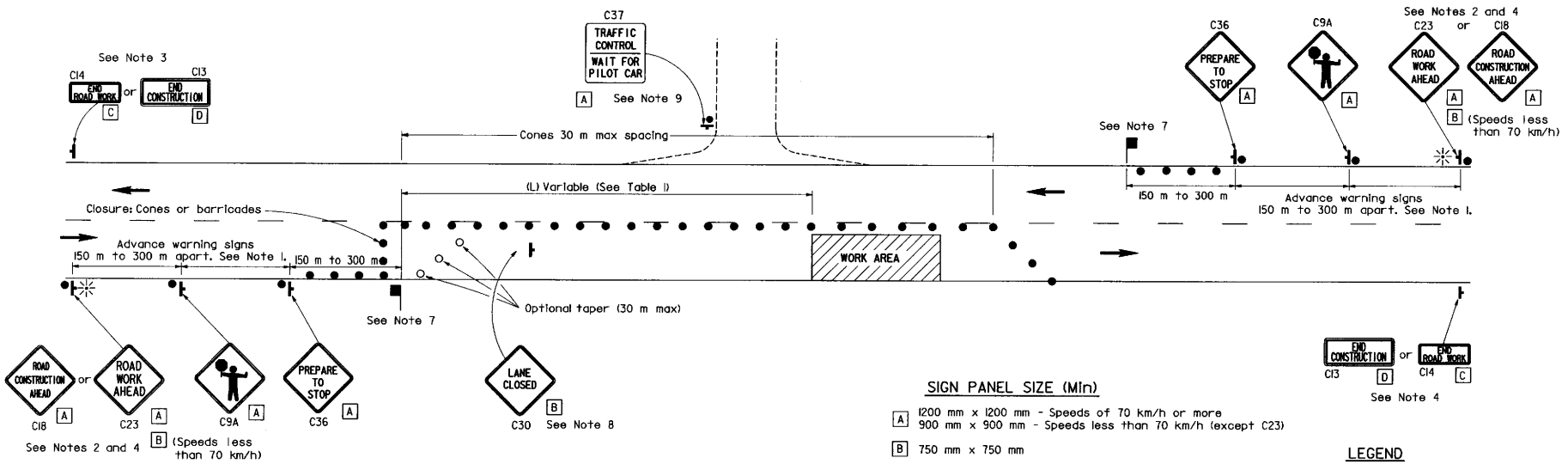

SIGN PANEL SIZE (Min)

- A 1200 mm x 1200 mm - Speeds of 70 km/h or more
  900 mm x 900 mm - Speeds less than 70 km/h (except C23)
- B 750 mm x 750 mm
- C 900 mm x 450 mm
- D 1200 mm x 450 mm

LEGEND

- Traffic Cone
- Traffic Cone (optional taper)
- Portable Sign
- Direction of Travel
- Portable Flashing Beacon
- Flagger

NOTES

1. Where approach speeds are low, signs may be placed at 90 m spacing, and in urban areas, closer.
2. All advance warning sign installations shall be equipped with flags for daytime closures. Flashing beacons shall be placed at the locations indicated during night lane closures.
3. A C13 "END CONSTRUCTION" or C14 "END ROAD WORK" sign, as appropriate, shall be placed at the end of the lane control unless the end of work area is obvious, or ends within a larger project's limits.
4. If the C18 (or C23) sign would follow within 600 m of a stationary C18, C23, or C11 "STATE HIGHWAY CONSTRUCTION NEXT_____ MILES", use a C9A sign for the first advance warning sign.
5. All cones used for night lane closures shall be fitted with reflective sleeves as specified in the specifications.
6. Portable delineators, placed at one-half the spacing indicated for traffic cones, may be used in lieu of cones for daytime closures only.
7. Additional advance flaggers may be required. Flagger station for work at night shall be illuminated as provided in the current edition of the "Manual of Traffic Controls" published by the State of California, Department of Transportation.
8. Place C30 "LANE CLOSED" sign at 150 to 300 m intervals throughout extended work areas. They are optional if the work area visible from the flagger station.
9. When a pilot car is used, place a C37 "TRAFFIC CONTROL-WAIT FOR PILOT CAR" sign.

TABLE I

Approach Speed (km/h)	* (L) (m)±
0-50	60
50-70	90
over 70	150

* Increase by 20 percent on sustained downgrades steeper than 3 percent and longer than 1.6 km.

STATE OF CALIFORNIA
DEPARTMENT OF TRANSPORTATION

TRAFFIC CONTROL SYSTEM FOR LANE CLOSURE ON TWO LANE CONVENTIONAL HIGHWAYS

NO SCALE

T13

STD. PLAN T13

Return to Table of Contents

TYPICAL RAMP CLOSURES

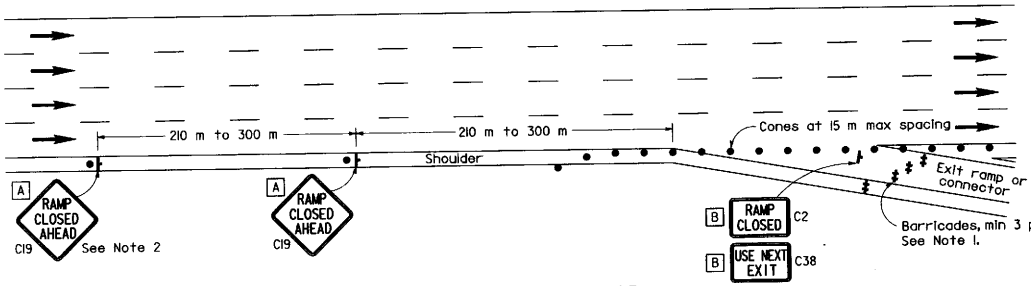

EXIT RAMP OR CONNECTOR

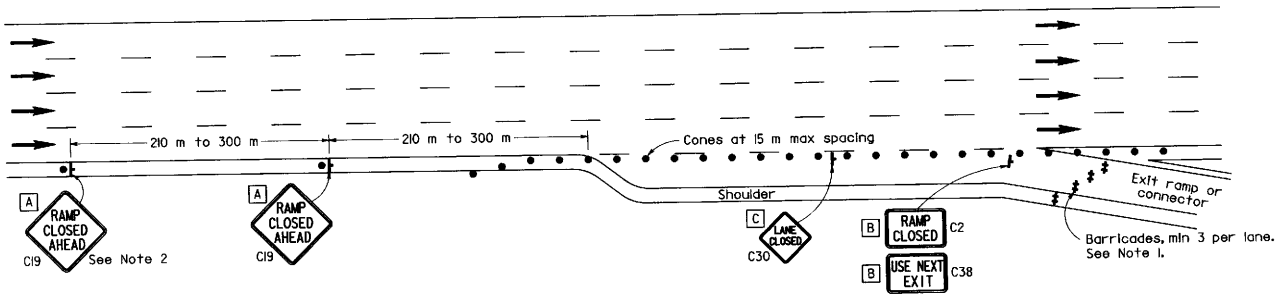

EXIT RAMP OR CONNECTOR WITH ADDITIONAL LANE

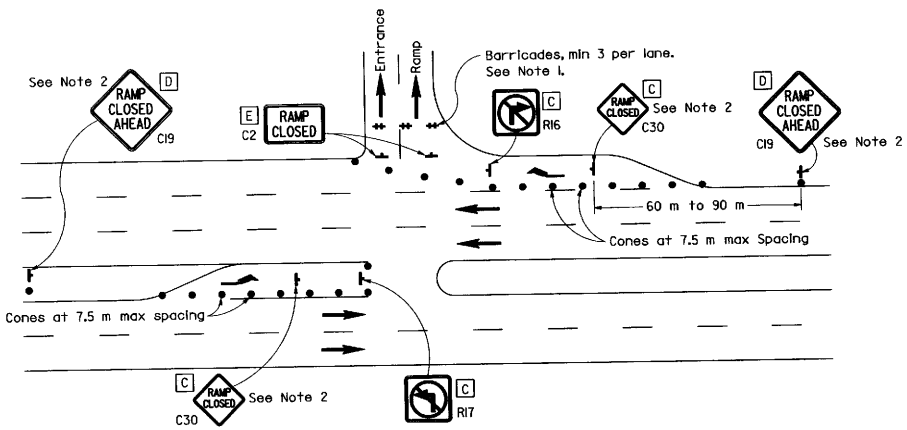

ENTRANCE RAMP WITH TURNING POCKETS

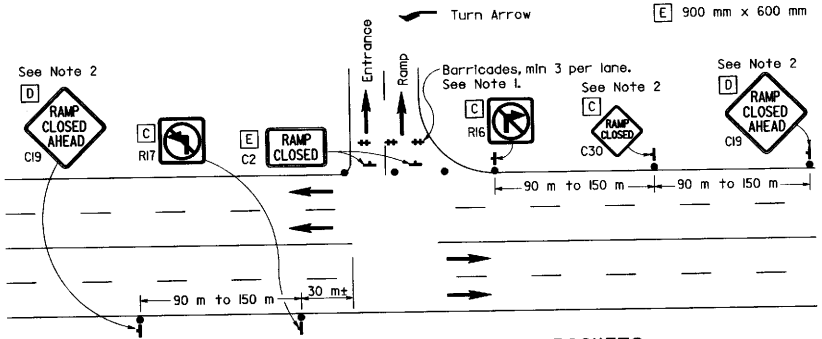

ENTRANCE RAMP WITHOUT TURNING POCKETS

NOTES

1. Barricades shall be Type I, II, or III for closures lasting one week or less and Type III for closures lasting longer than one week.
2. In lieu of placing the C19 "RAMP CLOSED AHEAD" and C30 "RAMP CLOSED" signs, black on orange overlay plates with the word "CLOSED" may be mounted, as directed by the Engineer, on all guide signs that refer to the closed ramp. The letter size on the overlay shall be the same as the guide sign.
3. All advance warning sign installations shall be equipped with flags for daytime closures.
4. All cones used for night lane closures shall be fitted with reflective sleeves as specified in the specifications.
5. Portable delineators, placed at one-half the spacing indicated for traffic cones, may be used in lieu of cones for daytime ramp closures only.
6. During nighttime ramp closures, at least one person shall be assigned full time for maintenance of traffic control devices.

LEGEND

- Traffic Cone
- Sign
- Barricades
- Direction of Travel
- Turn Arrow

SIGN PANEL SIZE (Min)

A	1200 mm x 1200 mm
B	1200 mm x 750 mm
C	750 mm x 750 mm
D	900 mm x 900 mm
E	900 mm x 600 mm

DIST	COUNTY	ROUTE	KILOMETER POST TOTAL PROJECT	SHEET NO.	TOTAL SHEETS

REGISTERED CIVIL ENGINEER

July 1, 1997
PLANS APPROVAL DATE

REGISTERED PROFESSIONAL ENGINEER
Gerry Mais
NO. C18915
Exp. 6-30-01
CIVIL
STATE OF CALIFORNIA

The State of California or its officers or agents shall not be responsible for the accuracy or completeness of electronic copies of this plan sheet.

STATE OF CALIFORNIA
DEPARTMENT OF TRANSPORTATION

TRAFFIC CONTROL SYSTEM FOR RAMP CLOSURE

NO SCALE

STD. PLAN T14

T14

Return to Table of Contents

DIST	COUNTY	ROUTE	KILOMETER POST TOTAL PROJECT	SHEET NO.	TOTAL SHEETS

REGISTERED CIVIL ENGINEER

July 1, 1997
PLANS APPROVAL DATE

REGISTERED PROFESSIONAL ENGINEER Gerry Mels No. C18915 Exp. 6-30-01 CIVIL STATE OF CALIFORNIA

The State of California or its officers or agents shall not be responsible for the accuracy or completeness of electronic copies of this plan sheet.

California Metric

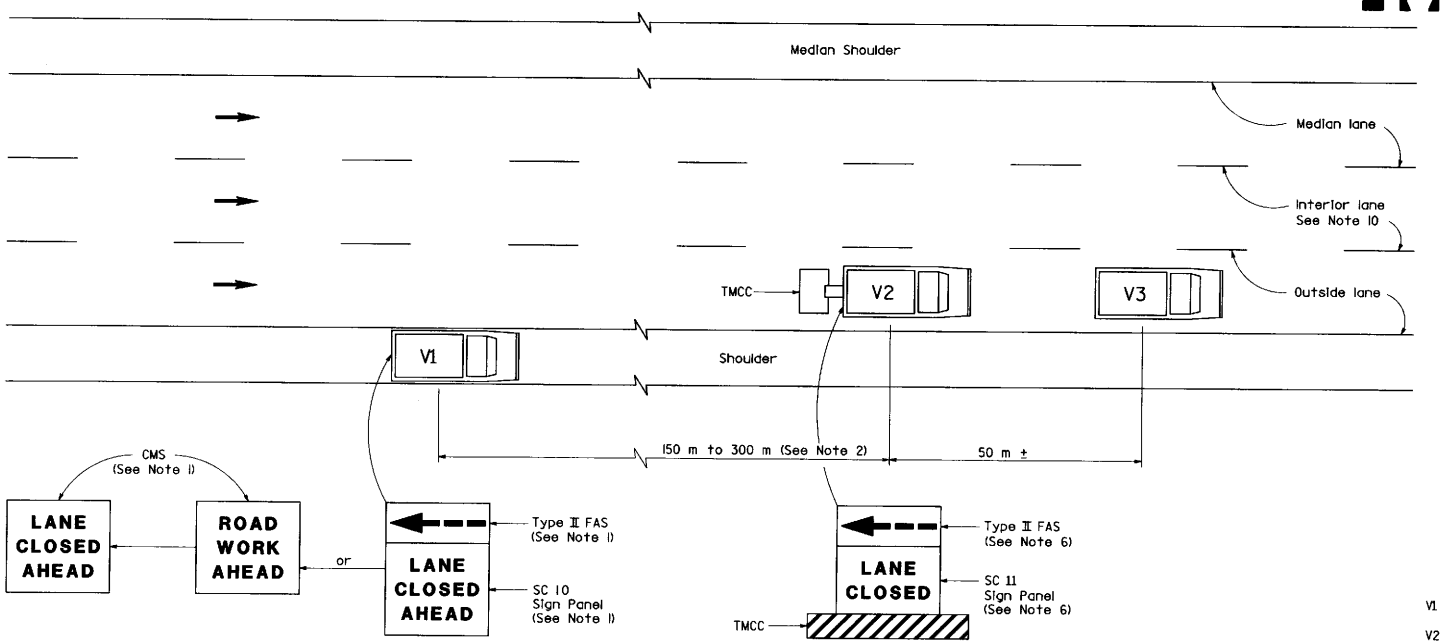

MOVING LANE CLOSURE ON MEDIAN OR OUTSIDE LANE OF MULTILANE HIGHWAYS

LEGEND

V1	Sign Vehicle
V2	Shadow Vehicle
V3	Work/Application Vehicle
FAS	Flashing Arrow Sign
CMS	Changeable Message Sign
TMCC	Truck-Mounted Crash Cushion
→	Direction of Travel

NOTES

1. Either the SC 10 sign panel shown or a changeable message sign shall be mounted on the rear of sign vehicle V1. A Type II flashing arrow sign shall be mounted on the rear of sign vehicle V1 and used with the SC 10 sign panel. A Type II flashing arrow sign will not be required with the changeable message sign provided the flashing arrow sign symbol may be displayed on the changeable message sign board. The changeable message sign shall be sequenced to show the "ROAD WORK AHEAD" message first, followed by the "LANE CLOSED AHEAD" message and then the flashing arrow sign symbol. For median lane closure, the flashing arrow sign symbol shall be reversed with the arrowhead on the right.
2. If traffic queues develop, sign vehicle V1 should be positioned upstream from the end of queue. Sign vehicle V1 shall be positioned where highly visible when shoulders are not available.
3. A minimum sight distance of 450 m should be provided in advance of sign vehicle V1.
4. Sign vehicle V1 should remain at the beginning of horizontal or vertical curves until the other vehicles (V2 and V3) are far enough beyond the curve to resume the minimum sight distance of 450 m.
5. Vehicle-mounted sign panels shall be Type III or IV reflective sheeting, black on white or black on orange with 150 mm minimum series D letters per Caltrans sign specifications.
6. Shadow vehicle V2 shall weigh between 5000 and 8000 kilograms and shall be equipped with a truck-mounted crash cushion. The sign panel shown and a Type II flashing arrow sign shall be mounted on the rear of shadow vehicle V2. For median lane closure, the flashing arrow sign symbol shall be reversed with with the arrowhead on the right.
7. All vehicles used for lane closures shall be equipped with two-way radios and the vehicle operators shall maintain communication during the work or application operation.
8. All vehicles shall be equipped with flashing or rotating amber lights.
9. Where sufficient shoulder width is not available and sign vehicle V1 would encroach upon the traveled way of the adjacent traffic lane during lane closures or where workers would be on foot in the work area, a stationary type lane-closure (Standard Plan T10, T11, and so on, as applicable) shall be used instead of this plan.
10. For moving lane closure on interior lane of multilane highways, see Standard Plan T16.

STATE OF CALIFORNIA
DEPARTMENT OF TRANSPORTATION

TRAFFIC CONTROL SYSTEM FOR MOVING LANE CLOSURE ON MULTILANE HIGHWAYS

NO SCALE

STD. PLAN T15

T15

Return to Table of Contents

DIST	COUNTY	ROUTE	KILOMETER POST TOTAL PROJECT	SHEET NO.	TOTAL SHEETS

REGISTERED CIVIL ENGINEER

July 1, 1997
PLANS APPROVAL DATE

The State of California or its officers or agents shall not be responsible for the accuracy or completeness of electronic copies of this plan sheet.

REGISTERED PROFESSIONAL ENGINEER
Gerry Weis
No. C18915
Exp. 6-30-01
CIVIL
STATE OF CALIFORNIA

Metric

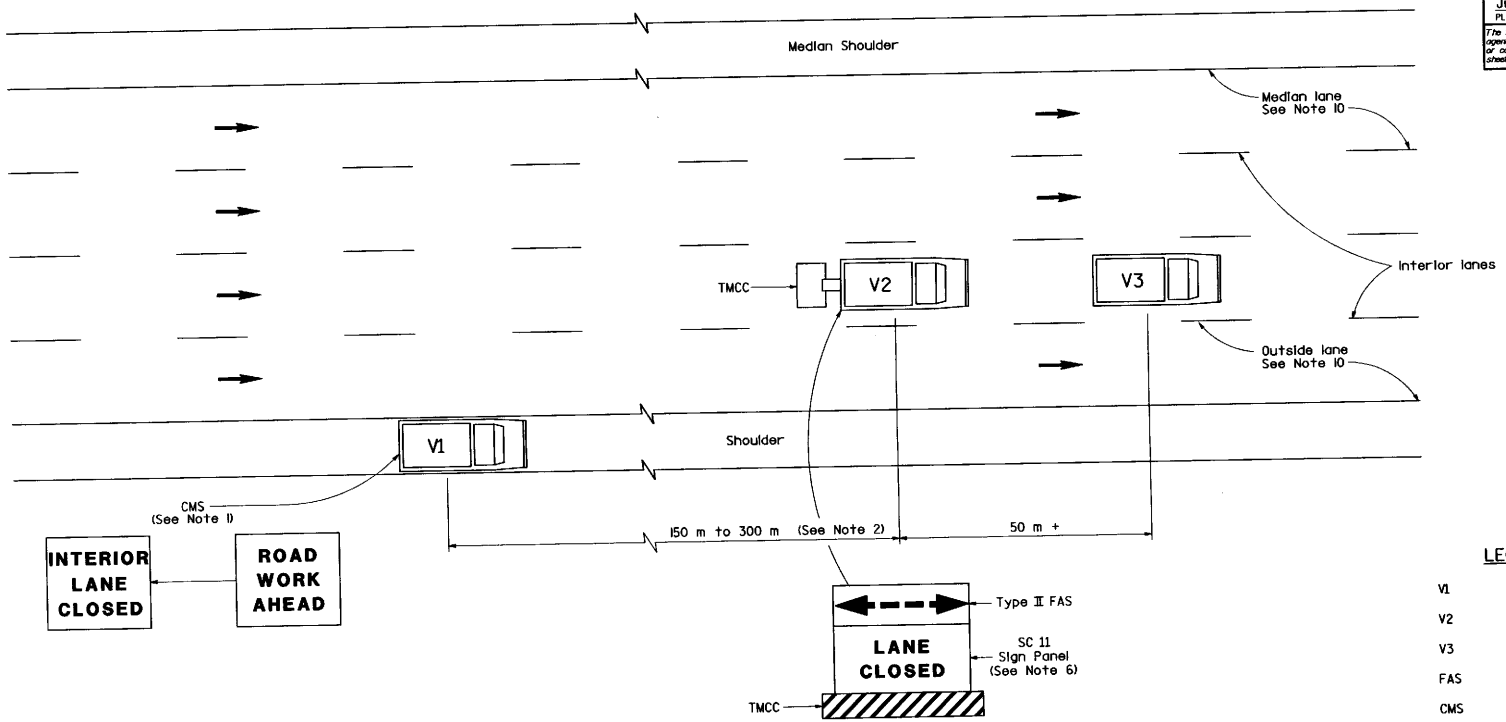

MOVING LANE CLOSURE ON INTERIOR LANE OF MULTILANE HIGHWAYS

LEGEND

V1	Sign Vehicle
V2	Shadow Vehicle
V3	Work/Application Vehicle
FAS	Flashing Arrow Sign
CMS	Changeable Message Sign
TMCC	Truck-Mounted Crash Cushion
→	Direction of Travel

NOTES

1. A changeable message sign shall be mounted on the rear of sign vehicle V1. The changeable message sign shall be sequenced to show the "ROAD WORK AHEAD" message first, followed by the "INTERIOR LANE CLOSED" message. The message "CENTER LANE CLOSED" may be used in place of the "INTERIOR LANE CLOSED" message.
2. If traffic queues develop, sign vehicle V1 should be positioned upstream from the end of queue. Sign vehicle V1 shall be positioned where highly visible when shoulders are not available.
3. A minimum sight distance of 450 m should be provided in advance of sign vehicle V1.
4. Sign vehicle V1 should remain at the beginning of horizontal or vertical curves until the other vehicles (V2 and V3) are far enough beyond the curve to resume the minimum sight distance of 450 m.
5. Vehicle-mounted sign panels shall be Type III or IV reflective sheeting, black on white or black on orange with 150 mm minimum series D letters per Caltrans sign specifications.
6. Shadow vehicle V2 shall weigh between 5000 and 8000 kilograms and shall be equipped with a truck-mounted crash cushion. The sign panel shown and a Type II flashing arrow sign shall be mounted on the rear of shadow vehicle V2.
7. All vehicles used for lane closures shall be equipped with two-way radios and the vehicle operators shall maintain communication during the work or application operation.
8. All vehicles shall be equipped with flashing or rotating amber lights.
9. Where sufficient shoulder width is not available and sign vehicle V1 would encroach upon the traveled way of the adjacent traffic lane during lane closures or where workers would be on foot in the work area, a stationary type lane closure (Standard Plan T10, T11, and so on, as applicable) shall be used instead of this plan.
10. For moving lane closure on median or outside lanes of multilane highways, see Standard Plan T15.

STATE OF CALIFORNIA
DEPARTMENT OF TRANSPORTATION

TRAFFIC CONTROL SYSTEM FOR MOVING LANE CLOSURE ON MULTILANE HIGHWAYS

NO SCALE

T16

STD. PLAN T16

Return to Table of Contents

DIST	COUNTY	ROUTE	KILOMETER POST TOTAL PROJECT	SHEET NO.	TOTAL SHEETS

REGISTERED CIVIL ENGINEER

July 1, 1997
PLANS APPROVAL DATE

The State of California or its officers or agents shall not be responsible for the accuracy or completeness of electronic copies of this plan sheet.

REGISTERED PROFESSIONAL ENGINEER
Gerry Mels
No. C18915
Exp. 6-30-01
CIVIL
STATE OF CALIFORNIA

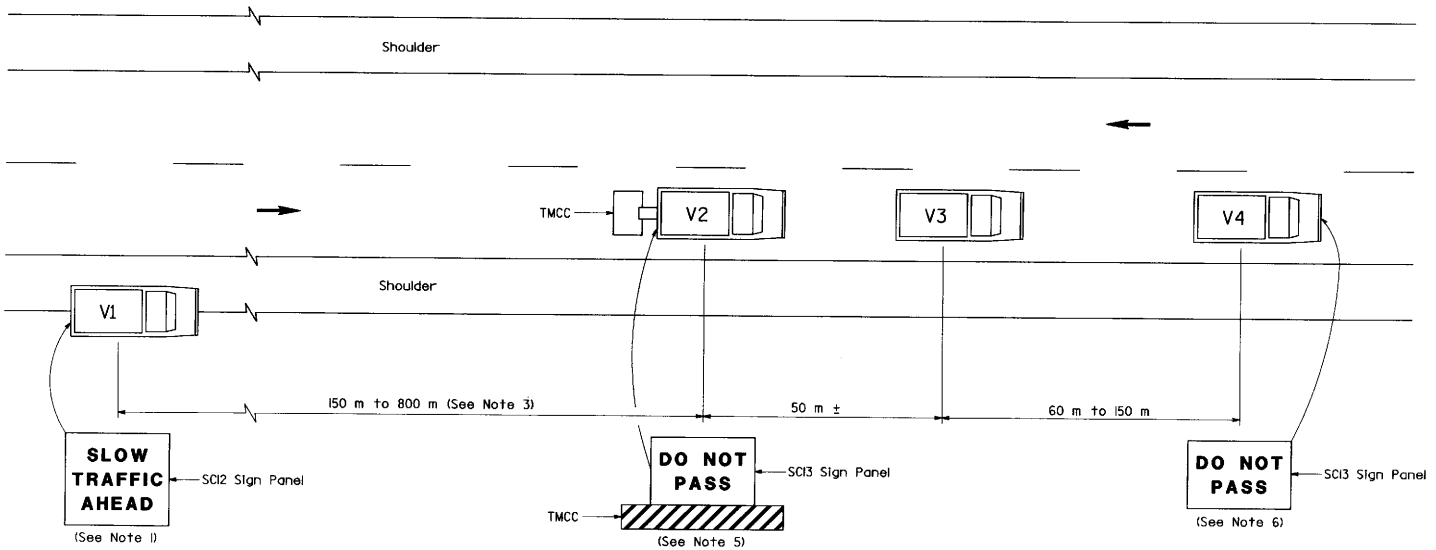

LEGEND

V1	Sign Vehicle
V2	Shadow Vehicle
V3	Work/Application Vehicle
V4	Sign Vehicle
TMCC	Truck-Mounted Crash Cushion
→	Direction of Travel

NOTES

1. Either the sign panel shown or a changeable message sign which can display the "SLOW TRAFFIC AHEA" message shall be mounted on the rear of sign vehicle V1.
2. Sign vehicle V1 should be positioned where highly visible when shoulders are not available.
3. If traffic queues develop, sign vehicle V1 should be positioned upstream from the end of queue.
4. Vehicle-mounted sign panels shall be Type III or IV reflective sheeting, black on white or black on orange with 150 mm minimum series D letters per Caltrans sign specifications.
5. Shadow vehicle V2 shall weigh between 5000 and 8000 kilograms and shall be equipped with a truck-mounted crash cushion. The sign panel shown shall be mounted on the rear of shadow vehicle V2. The message "LANE CLOSED" may be used in place of the "DO NOT PASS" message.
6. The sign panel shown shall be mounted on the front of sign vehicle V4, facing opposing traffic. The message "CAUTION" may be used in place of the "DO NOT PASS" message.
7. All vehicles shall be equipped with flashing or rotating amber lights.
8. Sign vehicle V4 will not be required when the work and vehicles V2 and V3 are 0.6 m or more from the centerline of the highway during the work or application operations.
9. All vehicles used for lane closures shall be equipped with two-way radios and the vehicle operators shall maintain communication during the work or application operation.
10. This plan shall not be used where workers would be on foot in the work area. Use a stationary type lane closure (Standard Plan T13) for this condition.

STATE OF CALIFORNIA
DEPARTMENT OF TRANSPORTATION

TRAFFIC CONTROL SYSTEM FOR MOVING LANE CLOSURE ON TWO LANE HIGHWAYS

NO SCALE

T17

STD. PLAN T17

Return to Table of Contents

DIST	COUNTY	ROUTE	KILOMETER POST TOTAL PROJECT	SHEET NO.	TOTAL SHEETS

R.A. Rogerson
REGISTERED CIVIL ENGINEER

July 1, 1997
PLANS APPROVAL DATE

REGISTERED PROFESSIONAL ENGINEER R.A. Rogerson No. C25712 Exp. 12-31-97 CIVIL STATE OF CALIFORNIA

The State of California or its officers or agents shall not be responsible for the accuracy or completeness of electronic copies of this plan sheet.

Caltrans Metric

BRIDGE PLAN ABBREVIATIONS

See Standard Plan A10A for additional abbreviations

Brg	Bearing
CG	Center of gravity
CIP	Cast-in-place
Cont	Continuous
FS	Far side
IF	Inside face
NS	Near side
OF	Outside face
J	Outer, outer left bridge
K	Outer left bridge
S	Outer right bridge
T	Outer, outer right bridge
T&B	Top and bottom

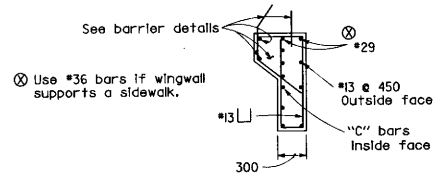

SECTION J-J
Without overhang

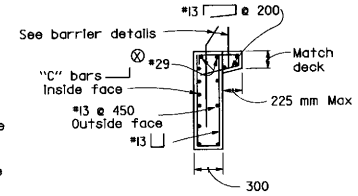

SECTION J-J
With overhang

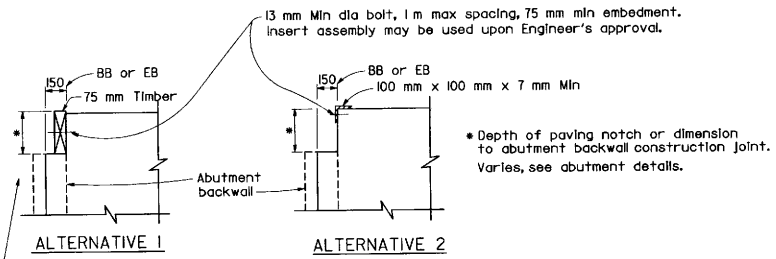

Top of bumper to be at or above the top of deck concrete. Bumpers and bolts to be removed immediately prior to placing approach pavement.

TEMPORARY BUMPERS
BRIDGE DETAIL 1-2

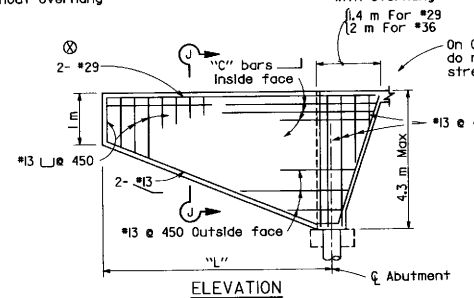

ELEVATION
SLOPING ABUTMENT

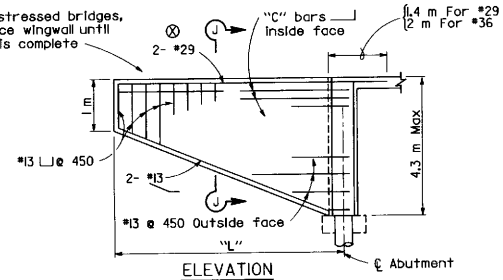

ELEVATION
VERTICAL ABUTMENT

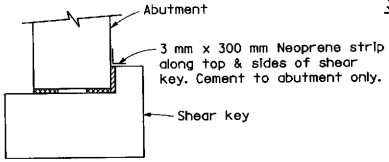

SHEAR KEY JOINT PROTECTION
BRIDGE DETAIL 1-6

"L"	"C" Bars
3.7 m	#16 @ 225
4.3 m	#19 @ 225
5 m	#22 @ 225
5.5 m	#25 @ 225
6 m	#29 @ 225

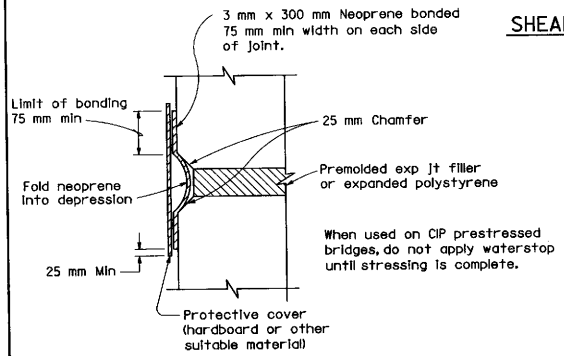

STRIP WATERSTOP DETAIL
BRIDGE DETAIL 1-3

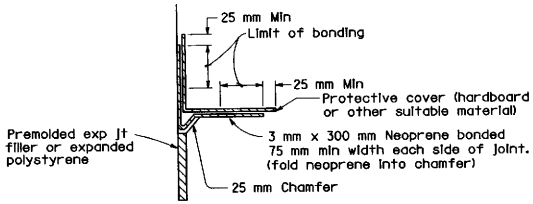

STRIP WATERSTOP CORNER DETAIL
BRIDGE DETAIL 1-4

When used on CIP prestressed bridges, do not apply waterstop until stressing is complete.

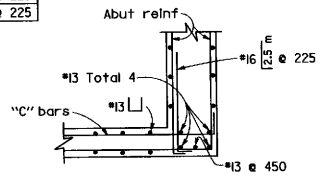

CORNER DETAIL
FOR SKEW 20° AND LESS

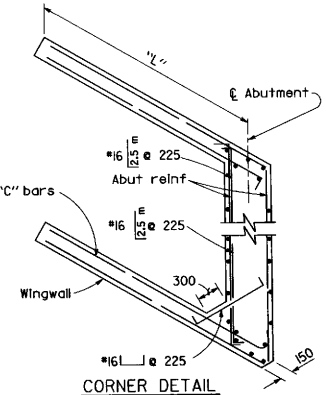

CORNER DETAIL
FOR SKEW OVER 20°

WINGWALLS FOR DIAPHRAGM ABUTMENT
BRIDGE DETAIL 1-5

STATE OF CALIFORNIA
DEPARTMENT OF TRANSPORTATION

BRIDGE DETAILS

NO SCALE

ALL DIMENSIONS ARE IN MILLIMETERS UNLESS OTHERWISE SHOWN

BO-1

STD. PLAN BO-1

Return to Table of Contents

DIST	COUNTY	ROUTE	KILOMETER POST TOTAL PROJECT	SHEET NO.	TOTAL SHEETS

Caltrans Metric

REGISTERED CIVIL ENGINEER

July 1, 1997
PLANS APPROVAL DATE

REGISTERED PROFESSIONAL ENGINEER James C. Moese No. C16576 Exp. 6-30-97 CIVIL STATE OF CALIFORNIA

The State of California or its officers or agents shall not be responsible for the accuracy or completeness of electronic copies of this plan sheet.

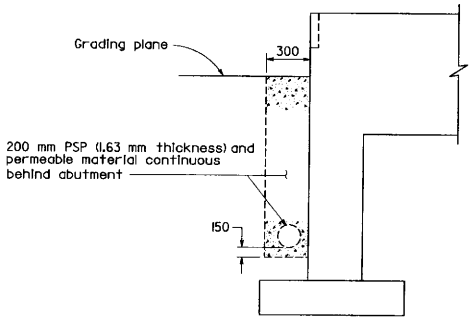

200 mm PSP AND PERMEABLE MATERIAL
BRIDGE DETAIL 3-5

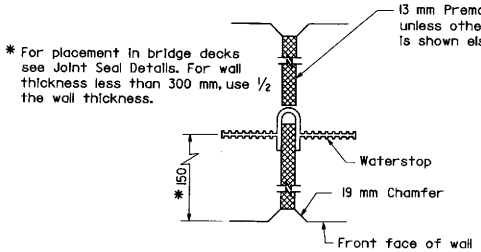

WALL EXPANSION JOINT
BRIDGE DETAIL 3-4

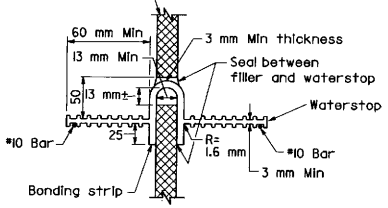

WATERSTOP
BRIDGE DETAIL 3-6

NOTES

Holes will be permitted in the outer 13 millimeters of the web for wire, rings, etc. Tie web to #10 reinforcing bars @ 400 millimeters maximum intervals to support the waterstop in proper position during concrete placement. Alternative detail may be submitted for approval of the Engineer.

Waterstop to have 5 or more pairs of of raised ribs to provide 65 square millimeters minimum rib cross-section area on each half of the waterstop.

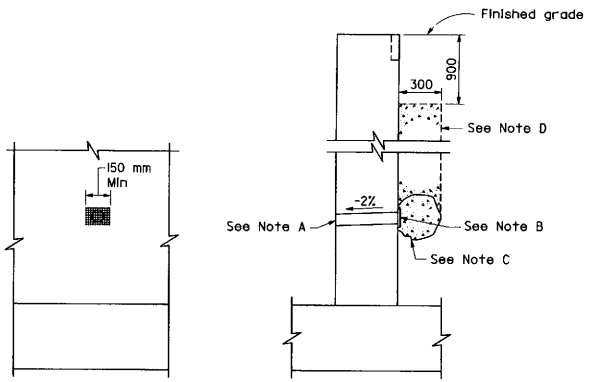

ELEVATION SECTION

WEEP HOLE AND PERVIOUS BACKFILL
BRIDGE DETAIL 3-1

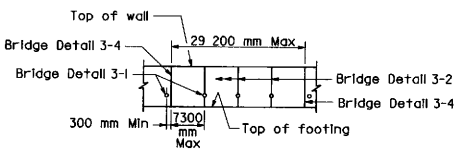

WALL EXPANSION JOINTS
AND WEAKENED PLANES
BRIDGE DETAIL 3-3

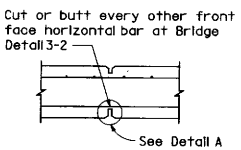

SECTION

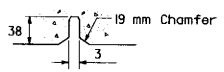

DETAIL A

WEAKENED PLANES
BRIDGE DETAIL 3-2

NOTES

A. 100 millimeters Ø Drains @ 7600 millimeters maximum center to center (2750 millimeters center to center for Type 3 and 2800 millimeters center to center for Type 4 retaining walls). For walls adjacent to sidewalks or curbs, provide 100 millimeters plastic pipe under the sidewalk to discharge thru curb face. Exposed wall drains shall be located 75 millimeters ± above finished grade.

B. 150 millimeters Square aluminum or galvanized steel wire 6 millimeters mesh hardware cloth (minimum wire diameter 0.64 millimeters). Anchor firmly to backface.

C. 0.03 cubic meter pervious backfill material in a nonwoven filter fabric, securely tied.

D. Pervious backfill material continuous behind retaining wall or abutment.

STATE OF CALIFORNIA
DEPARTMENT OF TRANSPORTATION

BRIDGE DETAILS

NO SCALE

ALL DIMENSIONS ARE IN MILLIMETERS UNLESS OTHERWISE SHOWN

BO-3

STD. PLAN BO-3

Return to Table of Contents

DIST	COUNTY	ROUTE	KILOMETER POST TOTAL PROJECT	SHEET NO.	TOTAL SHEETS

R.A. Rogerson
REGISTERED CIVIL ENGINEER

July 1, 1997
PLANS APPROVAL DATE

R.A. Rogerson
No. C25712
Exp. 12-31-97
CIVIL
STATE OF CALIFORNIA
REGISTERED PROFESSIONAL ENGINEER

The State of California or its officers or agents shall not be responsible for the accuracy or completeness of electronic copies of this plan sheet.

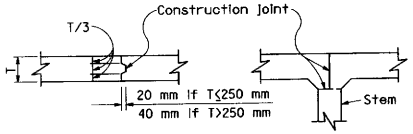

BRIDGE DETAIL 5-2
Top or bottom slab

BRIDGE DETAIL 5-3

DECK CONSTRUCTION JOINTS

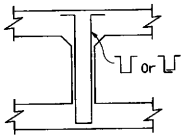

REINFORCED BOX GIRDER
Girder or diaphragm

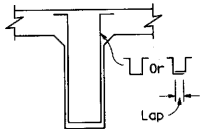

T-BEAM
Girder, bent cap or diaphragm

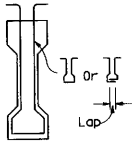

PRECAST GIRDER

A reinforcement bar must be placed inside of each stirrup hook or 90° bend.

ALTERNATIVE STIRRUPS
BRIDGE DETAIL 5-5

Stirrup Size	Lap (mm)
#13	125
#16	150
#19	200
#22	225
#25	250

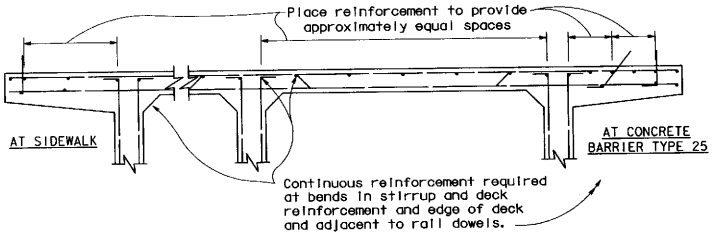

TOP GIRDER REINFORCEMENT
BRIDGE DETAIL 5-15

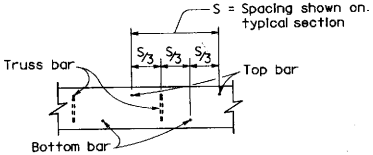

BRIDGE DETAIL 5-10

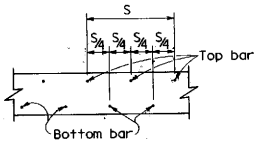

BRIDGE DETAIL 5-11

TRANSVERSE DECK REINFORCEMENT SPACING DIAGRAMS

NOTES

The Contractor shall submit a deck placing schedule which will be subject to the approval of the Engineer. Unless shown otherwise on the plans, the following conditions shall be provided for:

1. Transverse joints will not be permitted in simple spans unless approved by the Engineer. For continuous spans, transverse joints may be located at about the 1/4 point of span. If the deck is placed over continuous steel or precast concrete girders, the portion over the supports shall be placed last.
2. Longitudinal joints shall be located at the edge of a traffic lane unless otherwise permitted by the Engineer.
3. For decks supported on precast concrete girders, the intermediate and end diaphragms shall be placed at least five days before the deck.
4. For deck supported on structural steel, the crossframes for the entire width of bridge shall be in place.
5. Reinforcing steel shall be continuous thru all construction joints.

STATE OF CALIFORNIA
DEPARTMENT OF TRANSPORTATION

BRIDGE DETAILS

NO SCALE

ALL DIMENSIONS ARE IN MILLIMETERS UNLESS OTHERWISE SHOWN

BO-5

STD. PLAN BO-5

Return to Table of Contents

DIST	COUNTY	ROUTE	KILOMETER POST TOTAL PROJECT	SHEET NO.	TOTAL SHEETS

R.A. Rogerson
REGISTERED CIVIL ENGINEER

July 1, 1997
PLANS APPROVAL DATE

The State of California or its officers or agents shall not be responsible for the accuracy or completeness of electronic copies of this plan sheet.

REGISTERED PROFESSIONAL ENGINEER
R.A. Rogerson
No. C25712
Exp. 12-31-97
CIVIL
STATE OF CALIFORNIA

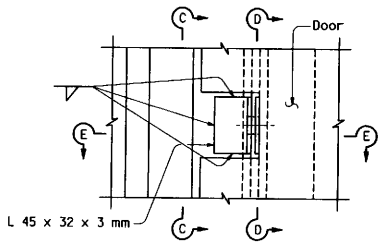

ELEVATION

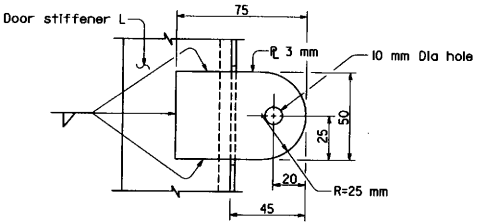

SECTION D-D

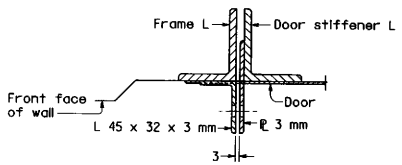

SECTION E-E

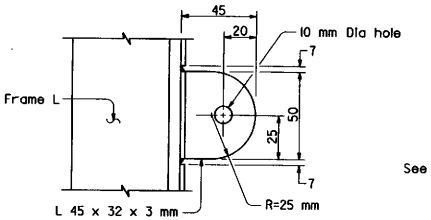

SECTION C-C

HASP DETAIL

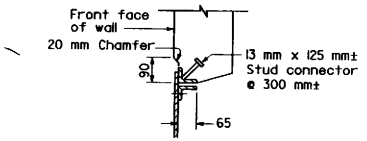

SECTION A-A

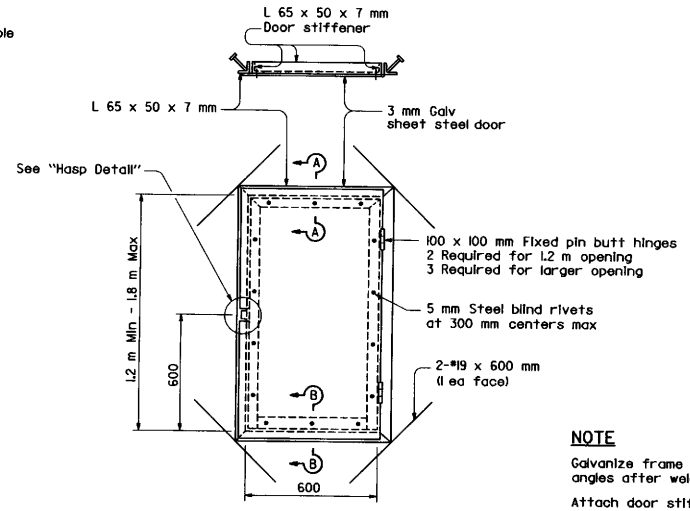

ACCESS DOOR

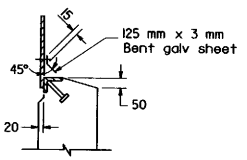

SECTION B-B

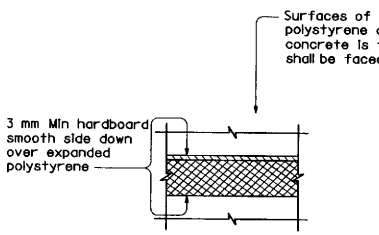

PROTECTION OF HORIZONTAL POLYSTYRENE

BRIDGE DETAIL 13-1

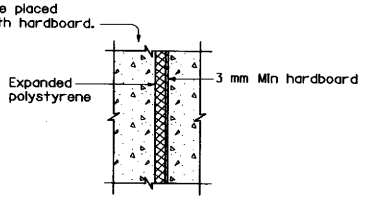

PROTECTION OF VERTICAL POLYSTYRENE

BRIDGE DETAIL 13-2

NOTE

Galvanize frame assemblies and door stiffener angles after welding and fabrication.

Attach door stiffener angles and bent sheet to steel door with blind rivets.

BRIDGE DETAIL 13-3

STATE OF CALIFORNIA
DEPARTMENT OF TRANSPORTATION

BRIDGE DETAILS

NO SCALE

ALL DIMENSIONS ARE IN MILLIMETERS UNLESS OTHERWISE SHOWN

BO-13

STD. PLAN BO-13

Return to Table of Contents

DIST	COUNTY	ROUTE	KILOMETER POST TOTAL PROJECT	SHEET NO.	TOTAL SHEETS

Caltrans Metric

T.P. Jensen
REGISTERED CIVIL ENGINEER

July 1, 1997
PLANS APPROVAL DATE

REGISTERED PROFESSIONAL ENGINEER T.P. Jensen No. C17596 Exp. 6-30-97 CIVIL STATE OF CALIFORNIA

The State of California or its officers or agents shall not be responsible for the accuracy or completeness of electronic copies of this plan sheet.

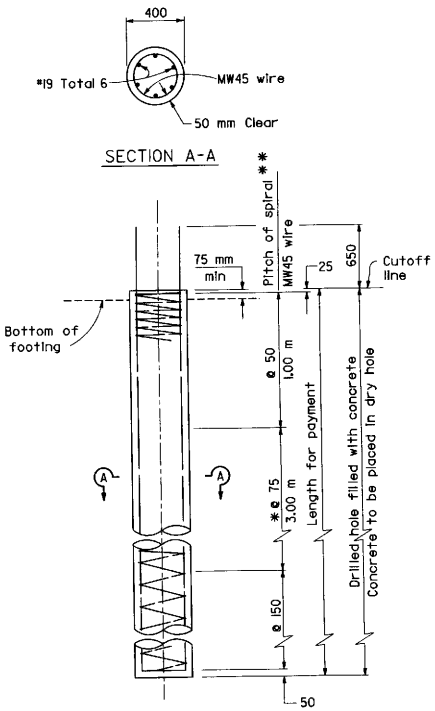

ELEVATION

400 AND 625 KILONEWTON DESIGN CAPACITY

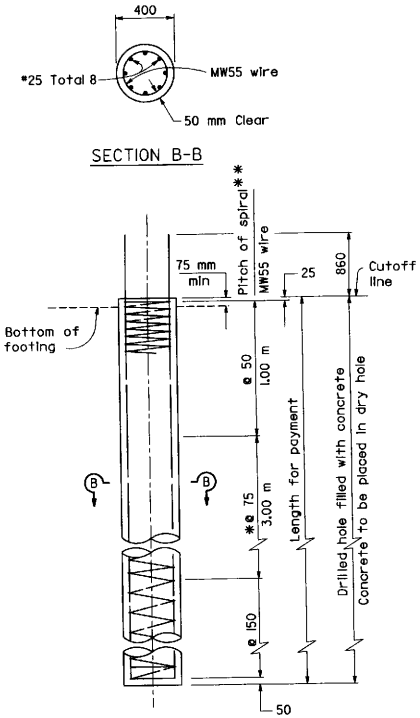

ELEVATION

900 KILONEWTON DESIGN CAPACITY

* @ 50 at option of contractor

** Extend at 50 mm pitch to top of anchor piles and load test piles. For additional longitudinal reinforcement for anchor piles and load test piles, see "Load Test Pile Details (2)", Standard Plan B2-10.

Pile design loading equals service state.

NOTES

Reinforcement extending into footing shall be hooked as required to provide clearance to top of footing.

Lapped splices in spiral pile reinforcement shall be lapped at least 80 wire diameters. Spiral pile reinforcement at splices and at ends shall be terminated with a 135° hook with a 150 mm tail hooked around a longitudinal bar.

Piles shall be extended only in accordance with details shown in the Project Plans.

DESIGN NOTES

REINFORCED CONCRETE

fy = 420 MPa

f'c = 28 MPa

DESIGN CAPACITY

400 & 625 KILONEWTON PILE

COMPRESSION:

625 kN (Service state)
1250 kN (Nominal axial resistance)

TENSION:

625 kN (Nominal axial resistance)

900 KILONEWTON PILE

COMPRESSION:

900 kN (Service state)
1800 kN (Nominal axial resistance)

TENSION:

900 kN (Nominal axial resistance)

STATE OF CALIFORNIA
DEPARTMENT OF TRANSPORTATION

400 mm CAST-IN-DRILLED-HOLE CONCRETE PILE

NO SCALE

ALL DIMENSIONS ARE IN MILLIMETERS UNLESS OTHERWISE SHOWN

B2-3

STD. PLAN B2-3

Return to Table of Contents

DIST	COUNTY	ROUTE	KILOMETER POST TOTAL PROJECT	SHEET NO.	TOTAL SHEETS

California Metric

T.P. Jensen
REGISTERED CIVIL ENGINEER

July 1, 1997
PLANS APPROVAL DATE

REGISTERED PROFESSIONAL ENGINEER T.P. Jensen No. C17596 Exp. 6-30-97 CIVIL STATE OF CALIFORNIA

The State of California or its officers or agents shall not be responsible for the accuracy or completeness of electronic copies of this plan sheet.

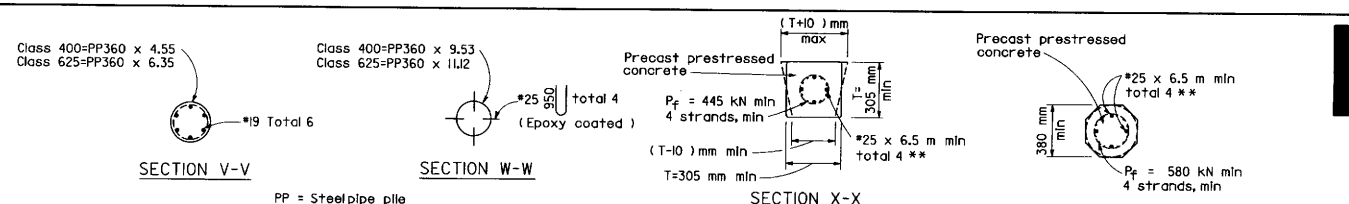

PP = Steel pipe pile

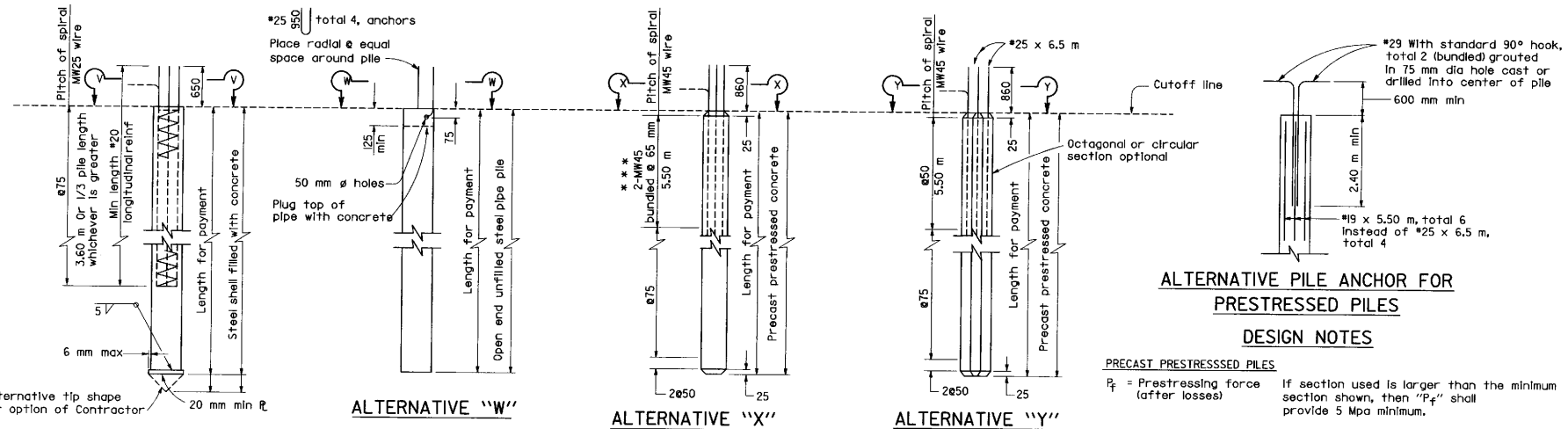

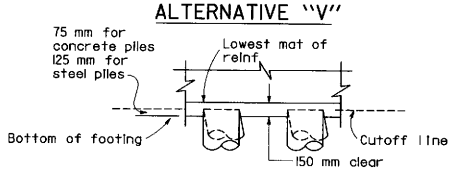

PILE EMBEDMENT

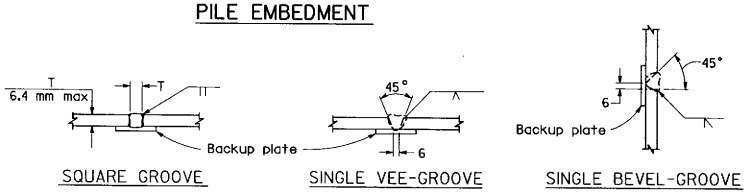

SQUARE GROOVE | SINGLE VEE-GROOVE | SINGLE BEVEL-GROOVE

PILE WELDING DETAIL- BUTT JOINTS

NOTES

1. Single Vee-Grove and Square Groove permitted for all positions.
2. Single Bevel-Groove permitted for horizontal joints only.

NOTES

1. Details are the same for both Class 400 and Class 625 piles unless noted otherwise.
2. At the Contractor's option, alternative steel pipe with at least the diameter and cross-sectional area shown on these plans may be used. The diameter shall not exceed 460 mm.
3. Pile reinforcement and steel pile anchor bars extending into a footing shall be hooked as required to provide clearance to top of footing. Piles shall be extended only in accordance with details shown elsewhere in these plans.
4. Lapped splices in spiral pile reinforcement shall be lapped 80 wire diameters minimum. Spiral pile reinforcement at splices and at ends shall be terminated by a 135° hook with 150 mm tail hooked around a longitudinal bar or strand.
5. 50 mm clearance to spiral reinforcement shall be maintained if section used is larger than the minimum section shown.
6. Maximum cutoff length at the top of the Alternative "X" and Alternative "Y" Piles is three (3) meters.
7. For additional longitudinal reinforcement and prestressing for anchor piles and load test piles, see "Load Test Pile Details (2)", Standard Plan B2-10.
8. Pile design loading equals service state.

ALTERNATIVE PILE ANCHOR FOR PRESTRESSED PILES

DESIGN NOTES

PRECAST PRESTRESSSED PILES

P_f = Prestressing force (after losses)

If section used is larger than the minimum section shown, then "P_f" shall provide 5 Mpa minimum.

Concrete Strength: f'c @ 28 days= 42 MPa (Alternative "X")
35 MPa (Alternative "Y")
f'ci @ transfer= 28 MPa

REINFORCED CONCRETE

f'c = 28 Mpa
fy = 420 Mpa

STEEL PIPE PILE

Fy (Minimum yield strength) = 240 Mpa
Fu (Minimum tensile strength) = 400 Mpa

DESIGN CAPACITY

Class 400
Compression = 400 kilonewtons (Service state)
= 800 kilonewtons (Nominal axial resistance)
Tension = 400 kilonewtons (Nominal axial resistance)

Class 625
Compression = 625 kilonewtons (Service state)
= 1250 kilonewtons (Nominal axial resistance)
Tension = 625 kilonewtons (Nominal axial resistance)

STATE OF CALIFORNIA
DEPARTMENT OF TRANSPORTATION

PILE DETAILS
CLASS 400 AND CLASS 625

NO SCALE

ALL DIMENSIONS ARE IN MILLIMETERS UNLESS OTHERWISE SHOWN

B2-5

Return to Table of Contents

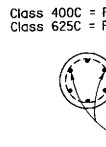

SECTION V-V

PP = Steel pipe pile

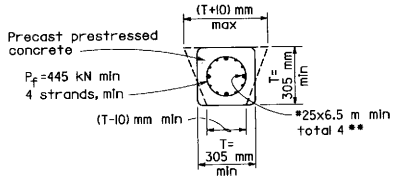

SECTION X-X

** To be in place when pile is cast.

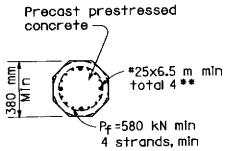

SECTION Y-Y

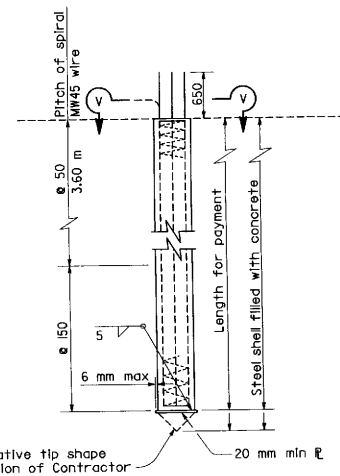

ALTERNATIVE "V"

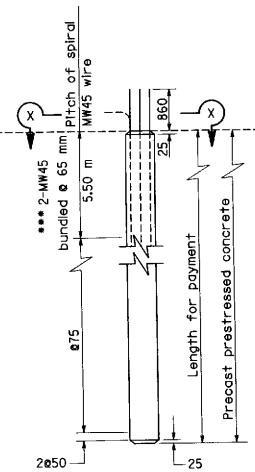

ALTERNATIVE "X"

*** MW70 at 50 may be substituted

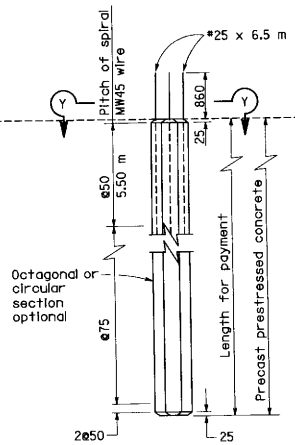

ALTERNATIVE "Y"

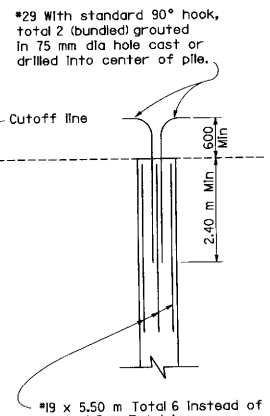

ALTERNATIVE PILE ANCHOR FOR PRESTRESSED PILES

NOTES

1. Details are the same for both Class 400C and Class 625C piles unless noted otherwise.
2. Pile reinforcement extending into a footing shall be hooked as required to provide clearance to top of footing. Piles shall be extended only in accordance with details shown elsewhere in these plans.
3. Lapped splices in spiral pile reinforcement shall be lapped 80 wire diameters minimum. Spiral pile reinforcement at splices and at ends shall be terminated by a 135° hook with 150 mm tail hooked around a longitudinal bar or strand.
4. At the Contractor's option, alternative steel pipe with at least the diameter and cross-sectional area shown on these plans may be used. The diameter shall not exceed 460 mm.
5. All concrete in piles shall contain not less than 450 kilograms of cement per cubic meter.
6. A 50 mm clearance to spiral reinforcement shall be maintained if section used is larger than the minimum section shown.
7. Maximum cut-off length at the top of the Alternative "X" and Alternative "Y" piles is three (3) meters.
8. For additional longitudinal reinforcement and prestressing for anchor piles and load test piles, see "LOAD TEST PILE DETAILS (2)", STANDARD PLAN B2-10.
9. Pile design loading equals service state.

DESIGN NOTES

PRECAST PRESTRESSED PILES:

P_f = Prestressing Force (after losses)

If section used is larger than the minimum section shown, then "P_f" shall provide 5 MPa minimum.

CONCRETE STRENGTH: f'_c @ 28 days=42 MPa (Alternative "X")
35 MPa (Alternative "Y")
f'_{ci} @ transfer=28 MPa

REINFORCED CONCRETE

f'_c = 28 Mpa
f_y = 420 MPa

DESIGN CAPACITY:

Class 400

Compression = 400 kilonewtons (Service state)
= 800 kilonewtons (Nominal axial resistance)
Tension = 400 kilonewtons (Nominal axial resistance)

Class 625

Compression = 625 kilonewtons (Service state)
= 1250 kilonewtons (Nominal axial resistance)
Tension = 625 kilonewtons (Nominal axial resistance)

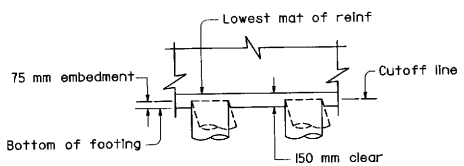

PILE EMBEDMENT

Caltrans Metric

DIST	COUNTY	ROUTE	KILOMETER POST TOTAL PROJECT	SHEET NO.	TOTAL SHEETS

T.P. Jensen
REGISTERED CIVIL ENGINEER

July 1, 1997
PLANS APPROVAL DATE

REGISTERED PROFESSIONAL ENGINEER T.P. Jensen No. C17596 Exp. 6-30-97 CIVIL STATE OF CALIFORNIA

The State of California or its officers or agents shall not be responsible for the accuracy or completeness of electronic copies of this plan sheet.

STATE OF CALIFORNIA
DEPARTMENT OF TRANSPORTATION

PILE DETAILS
CLASS 400C AND CLASS 625C

NO SCALE

ALL DIMENSIONS ARE IN MILLIMETERS UNLESS OTHERWISE SHOWN

B2-6

STD. PLAN B2-6

Return to Table of Contents

DIST	COUNTY	ROUTE	KILOMETER POST TOTAL PROJECT	SHEET NO.	TOTAL SHEETS

T.P. Jensen
REGISTERED CIVIL ENGINEER

July 1, 1997
PLANS APPROVAL DATE

REGISTERED PROFESSIONAL ENGINEER T.P. Jensen No. C17596 Exp. 6-30-97 CIVIL STATE OF CALIFORNIA

The State of California or its officers or agents shall not be responsible for the accuracy or completeness of electronic copies of this plan sheet.

Caltrans Metric

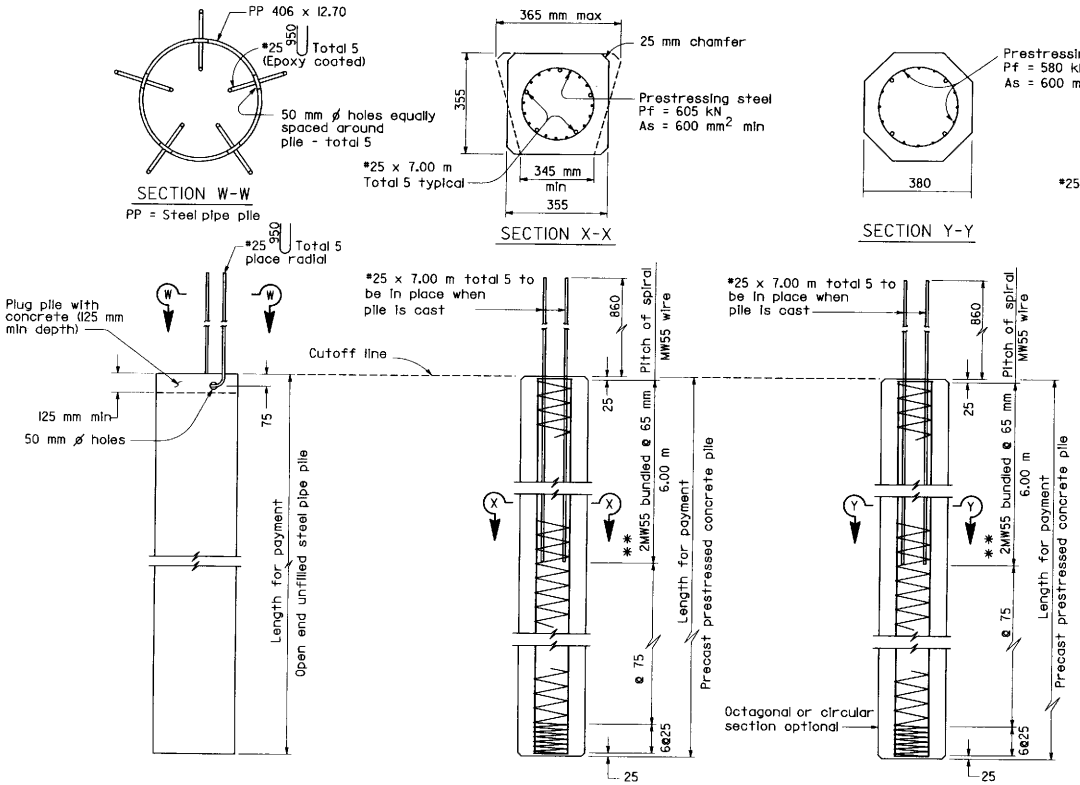

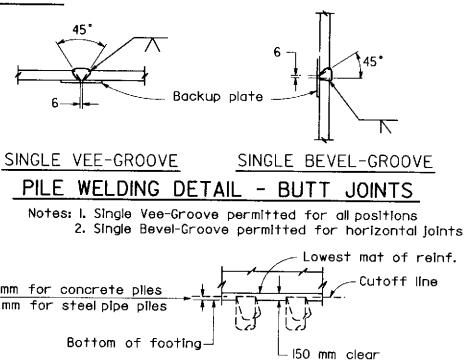

DESIGN NOTES

DESIGN: BRIDGE DESIGN SPECIFICATIONS (1983 AASHTO with Interims and Revisions by CALTRANS)

DESIGN CAPACITY:

Compression = 900 kilonewtons (Service state)
= 1800 kilonewtons (Nominal axial resistance)
Tension = 900 kilonewtons (Nominal axial resistance)

REINFORCED CONCRETE

f'_c = 28 MPa
f_y = 420 MPa

PRECAST PRESTRESSED PILES

Pf = Prestress Force (After losses)
Concrete Strength f'_c @ 28 days = 48 MPa
f'_{ci} @ transfer = 28 MPa

STEEL PIPE PILE

Fy (minimum yield strength) = 240 MPa
Fu (minimum tensile strength) = 400 MPa

NOTES:

1. Concrete in Class 900C Piles shall contain not less than 450 kilograms of cement per cubic meter.
2. Pile reinforcement extending into footing shall be hooked as required to provide clearance to top of footing.
3. Lapped splices in spiral pile reinforcement shall be lapped 80 wire diameters minimum. Spiral pile reinforcement at splices and at ends shall be terminated by a 135° hook with 150 mm tail hooked around a longitudinal bar or strand
4. At the Contractor's option, alternative steel pipe with at least the diameter and cross-sectional area shown on these plans may be used. The diameter shall not exceed 460 mm.
5. Alternative "W" piles shall not be used for CLASS 900C pile.
6. Maximum cut-off length at the top of the Alternative "X" and Alternative "Y" piles is three (3) meters.
7. Pile design loading equals service state.

STATE OF CALIFORNIA
DEPARTMENT OF TRANSPORTATION

PILE DETAILS
CLASS 900 AND CLASS 900C

NO SCALE

ALL DIMENSIONS ARE IN MILLIMETERS UNLESS OTHERWISE SHOWN

B2-8

STD. PLAN B2-8

Return to Table of Contents

DIST	COUNTY	ROUTE	KILOMETER POST TOTAL PROJECT	SHEET NO.	TOTAL SHEETS

Metric

REGISTERED CIVIL ENGINEER

July 1, 1997
PLANS APPROVAL DATE

REGISTERED PROFESSIONAL ENGINEER T.P. Jensen No. C17596 Exp. 6-30-97 CIVIL STATE OF CALIFORNIA

The State of California or its officers or agents shall not be responsible for the accuracy or completeness of electronic copies of this plan sheet.

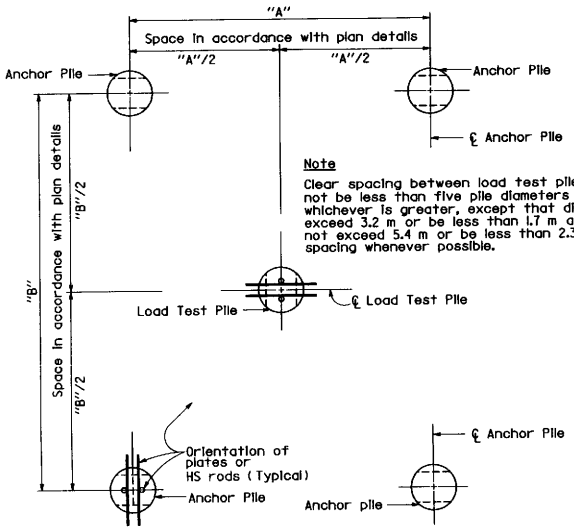

PLAN

Note

Clear spacing between load test pile and anchor pile shall not be less than five pile diameters or two meters, whichever is greater, except that dimension "A" shall not exceed 3.2 m or be less than 1.7 m and dimension "B" shall not exceed 5.4 m or be less than 2.3 m. Use maximum spacing whenever possible.

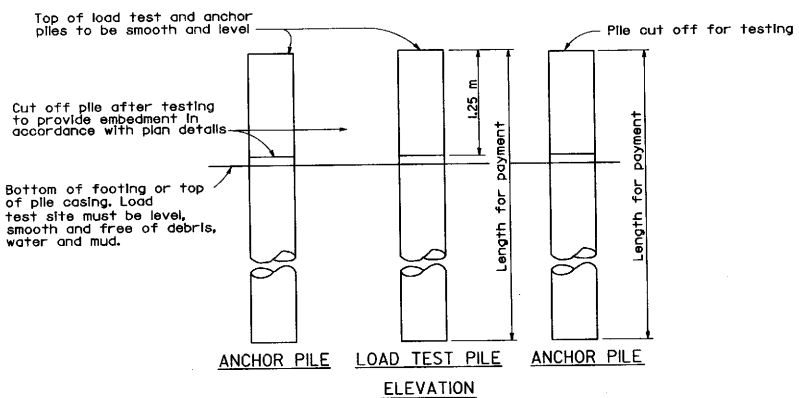

ELEVATION

FIVE - PILE LOAD TEST PILE GROUP

(FOR COMPRESSION - TENSION PILE LOAD TESTS)

Note

Clear spacing between load test pile and anchor pile shall not be less than five pile diameters or two meters, whichever is greater, except that "B" shall not exceed 5.4 m or be less than 2.0 m. Use maximum spacing whenever possible.

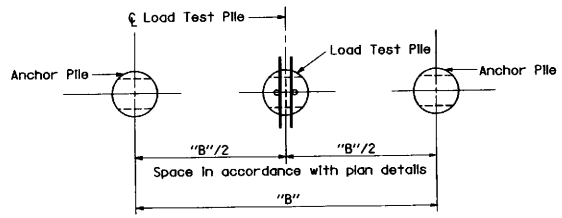

PLAN

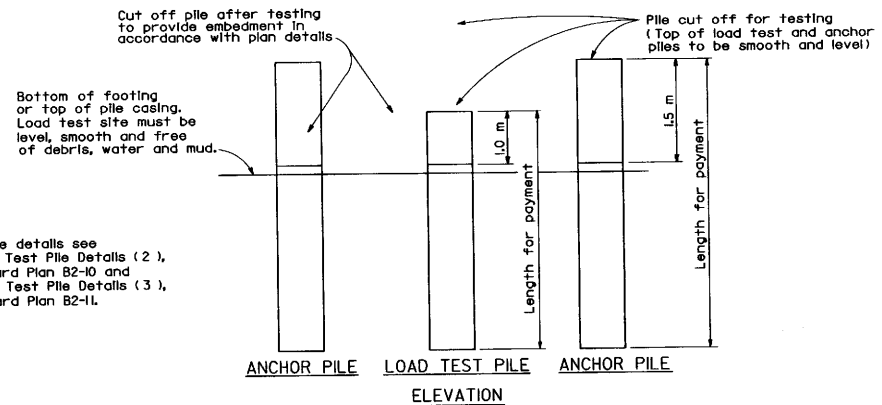

ELEVATION

Note: For pile details see "Load Test Pile Details (2), Standard Plan B2-10 and "Load Test Pile Details (3), Standard Plan B2-11.

THREE - PILE LOAD TEST PILE GROUP

(FOR TENSION PILE LOAD TESTS ONLY)

STATE OF CALIFORNIA
DEPARTMENT OF TRANSPORTATION

LOAD TEST PILE DETAILS (1)

NO SCALE

ALL DIMENSIONS ARE IN MILLIMETERS UNLESS OTHERWISE SHOWN

B2-9

STD. PLAN B2-9

Return to Table of Contents

DIST	COUNTY	ROUTE	KILOMETER POST TOTAL PROJECT	SHEET NO.	TOTAL SHEETS

California Metric

T.P. Jensen
REGISTERED CIVIL ENGINEER

July 1, 1997
PLANS APPROVAL DATE

REGISTERED PROFESSIONAL ENGINEER T.P. Jensen No. C17596 Exp. 6-30-97 CIVIL STATE OF CALIFORNIA

The State of California or its officers or agents shall not be responsible for the accuracy or completeness of electronic copies of this plan sheet.

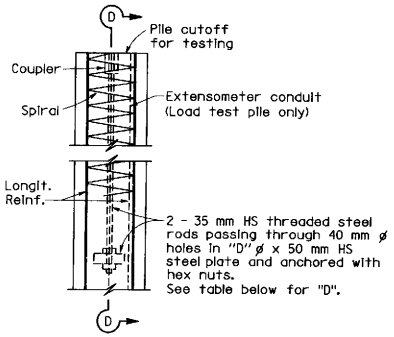

ELEVATION

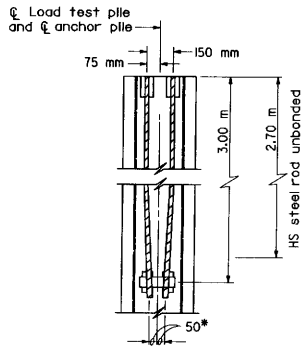

SECTION D-D
*38 mm for Alt "X"

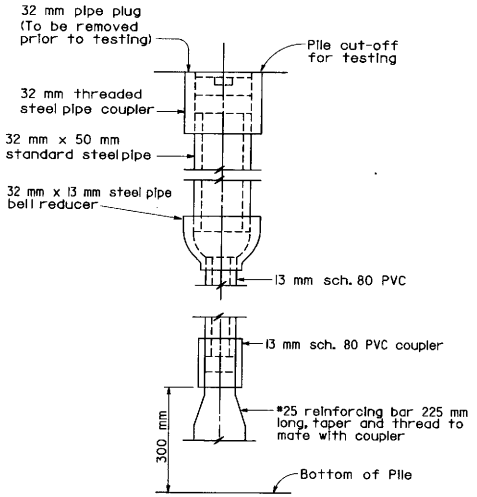

EXTENSOMETER CONDUIT DETAILS

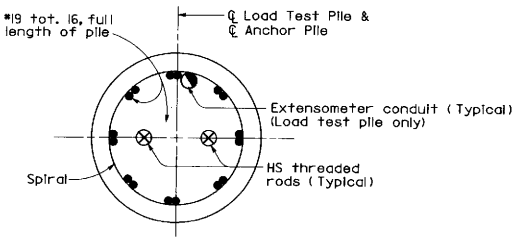

400 mm CIDH CONCRETE PILE

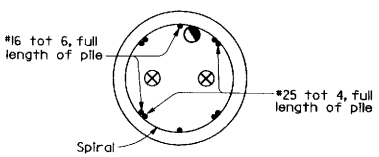

ALTERNATIVE "V"

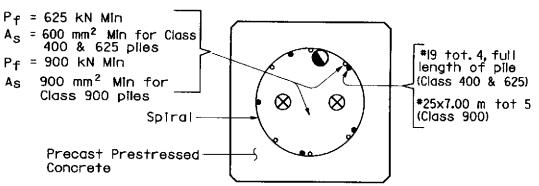

ALTERNATIVE "X"

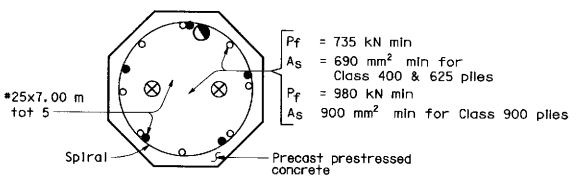

ALTERNATIVE "Y"

CONCRETE PILE DETAILS

PILE TYPE	"D" (mm)	MAXIMUM TENSILE TEST FORCE PER PILE
Class 400 & 625 Alt "V","Y"	175	935 kilonewtons
Class 400 & 625 Alt "X"	150	935 kilonewtons
Class 900 Alt "X","Y"	170	1350 kilonewtons
CIDH	200	1350 kilonewtons

NOTES:

1. For details not shown see applicable pile details shown elsewhere in the Project Plans.
2. For the additional top 1.25 meters of pile for testing, the spiral reinforcement shall be the same size and placed at the same pitch as detailed for the top of piles shown elsewhere in the Project Plans.
3. Details applicable for load test and anchor piles.

STATE OF CALIFORNIA
DEPARTMENT OF TRANSPORTATION

LOAD TEST PILE DETAILS (2)

NO SCALE

ALL DIMENSIONS ARE IN MILLIMETERS UNLESS OTHERWISE SHOWN

B2-10

STD. PLAN B2-10

Return to Table of Contents

DIST	COUNTY	ROUTE	KILOMETER POST TOTAL PROJECT	SHEET NO.	TOTAL SHEETS

REGISTERED CIVIL ENGINEER

July 1, 1997
PLANS APPROVAL DATE

REGISTERED PROFESSIONAL ENGINEER T.P. Jensen No. C17596 Exp. 6-30-97 CIVIL STATE OF CALIFORNIA

The State of California or its officers or agents shall not be responsible for the accuracy or completeness of electronic copies of this plan sheet.

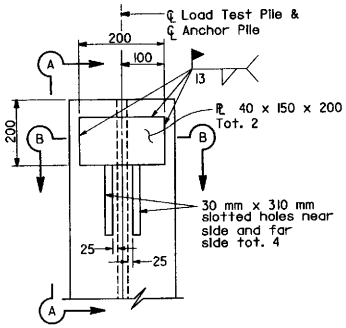

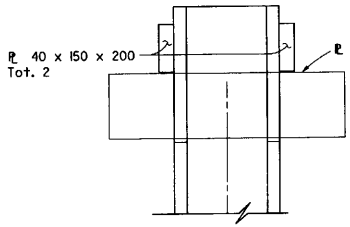

SECTION A-A

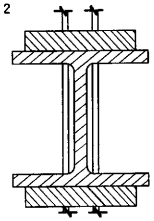

SECTION B-B

Maximum Tensile Test Force Per Pile : HP 250x62= 800 kN
HP 250x85= 1090 kN
HP 360x132= 1350 kN

STEEL H-PILE DETAILS

Note

Alignment of slots and 40 mm ℞'s shall permit a ℞ 25 mm x 305 mm x 1.00 m to pass through pile parallel to ℄ web of pile and achieve a snug fit. Details applicable for load test and anchor piles. Slots to be cut after piles are driven.

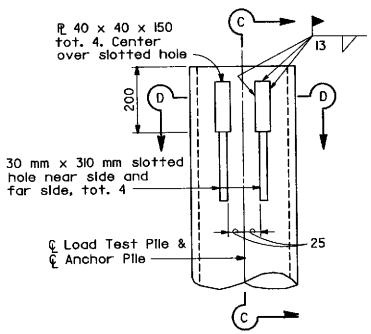

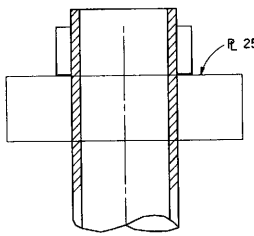

SECTION C-C

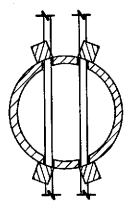

SECTION D-D

Maximum Tensile Test Force Per Pile : Class 400 (PP 360 X 9.53)= 800 kN
Class 625 (PP 360 x 11.12)= 1245 kN
Class 900 (PP 406 x 12.70)= 1350 kN

ALTERNATIVE "W" STEEL PIPE - PILE DETAILS

Note

Alignment of slots and 40 mm ℞'s shall permit a ℞ 25 mm x 305 mm x 1.00 m to pass through pile.
Details applicable for load test and anchor piles.
Slots to be cut after piles are driven.

STATE OF CALIFORNIA
DEPARTMENT OF TRANSPORTATION

LOAD TEST PILE DETAILS (3)

NO SCALE

ALL DIMENSIONS ARE IN
MILLIMETERS UNLESS OTHERWISE SHOWN

B2-11

STD. PLAN B2-11

Return to Table of Contents

DIST	COUNTY	ROUTE	KILOMETER POST TOTAL PROJECT	SHEET NO.	TOTAL SHEETS

REGISTERED CIVIL ENGINEER

July 1, 1997
PLANS APPROVAL DATE

REGISTERED PROFESSIONAL ENGINEER James C. Moose No. C16576 Exp. 6-30-97 CIVIL STATE OF CALIFORNIA

The State of California or its officers or agents shall not be responsible for the accuracy or completeness of electronic copies of this plan sheet.

Caltrans Metric

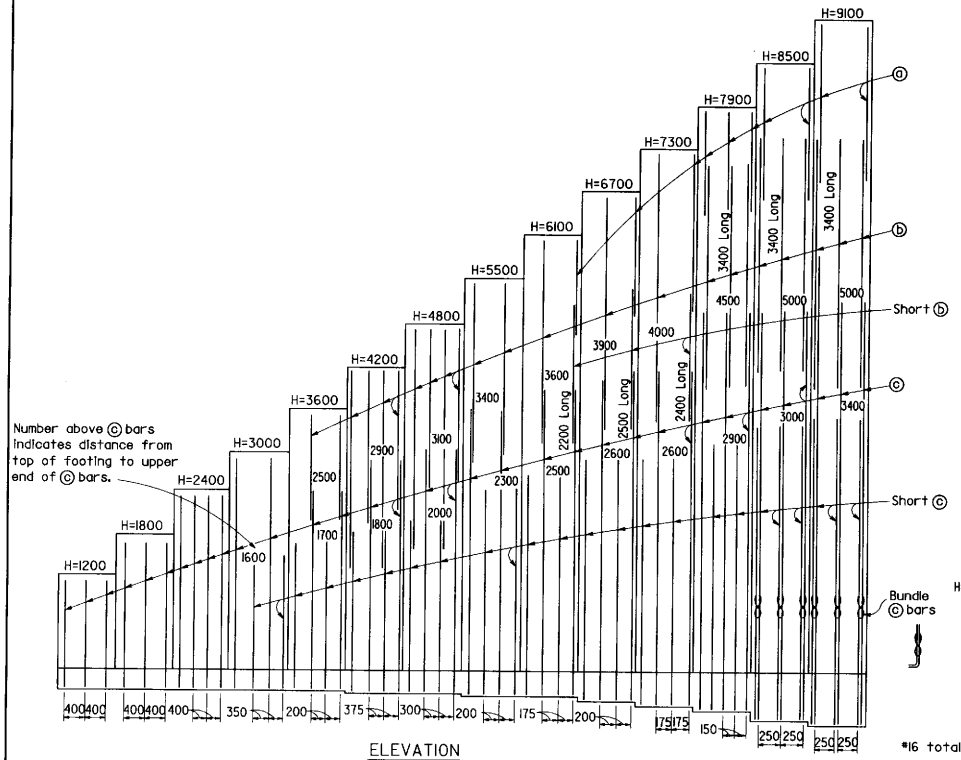

ELEVATION

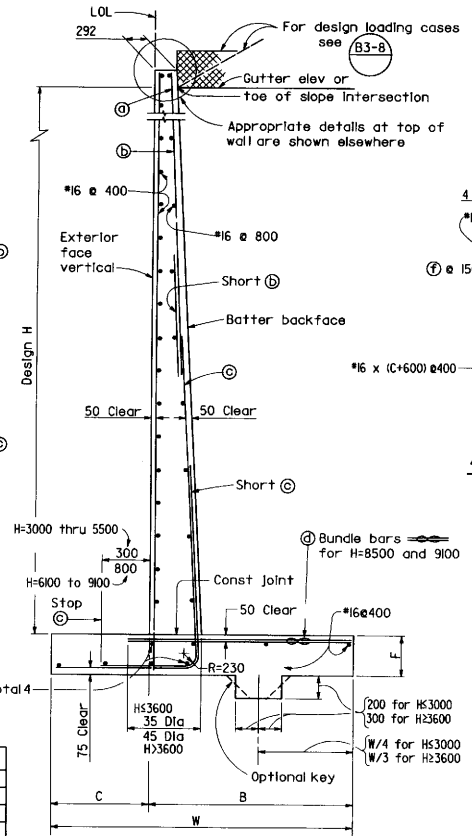

SPREAD FOOTING SECTION

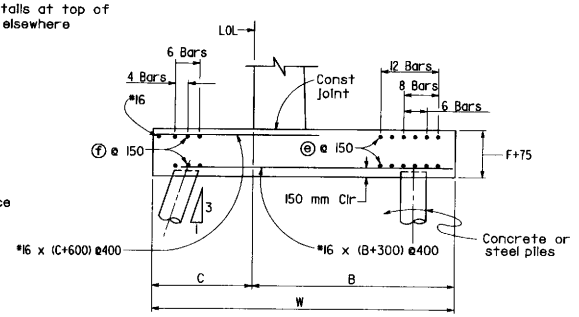

400 kN PILE FOOTING SECTION

Reinforcement detailed is to be placed in addition to that shown for spread footing. All piles not shown, see Pile Layout on other sheets.

TABLE OF REINFORCING STEEL DIMENSIONS AND DATA

Design H	1200	1800	2400	3000	3600	4200	4800	5500	6100	6700	7300	7900	8500	9100
W	1000	1300	1600	1900	2200	2450	2750	3050	3350	3700	4050	4350	4650	5100
C	300	400	500	600	700	800	900	1000	1100	1200	1350	1450	1550	1650
B	700	900	1100	1300	1500	1650	1850	2050	2250	2500	2700	2900	3100	3450
F	400	400	400	400	400	450	450	450	450	500	550	650	750	850
Batter	100:4	100:4	100:4	100:4	100:4	100:4	100:4	100:4	100:4	100:4	100:5	100:6	100:6	100:7
ⓐ bars	—	—	—	—	—	—	—	—	#16@700	#16@800	#16@700	#16@300	#16@260	#25@500
ⓑ bars	—	—	—	—	#16@400	#16@300	#16@300	#19@400	#25@350	#25@400	#25@350	#25@300	#25@250	#29@250
ⓒ bars	#16@400	#16@400	#16@400	#19@350	#19@200	#25@300	#29@300	#29@200	#29@175	#36@200	#36@175	#36@150	#36@250 ⅋	#36@250 ⅋
ⓓ bars	#16@400	#16@400	#16@400	#16@350	#16@200	#25@300	#29@300	#29@200	#29@175	#36@200	#36@175	#36@150	#36@250 ⅋	#36@250 ⅋
Total ⓔ bars	6-#19	6-#19	6-#19	12-#19	12-#19	12-#19	12-#19	8-#19	8-#19	8-#19	6-#19	6-#19	6-#19	6-#19
Total ⓕ bars	—	—	—	6-#19	6-#19	6-#19	6-#19	6-#19	6-#19	6-#19	4-#16	4-#16	4-#16	4-#16
Loading Case I Toe Pressure kPa	80	90	105	120	135	160	170	190	205	220	235	255	275	300
Loading Case II Toe Pressure kPa	55	70	95	110	130	160	175	200	225	265	285	310	340	360
Loading Case III Toe Pressure kPa	65	80	100	120	140	165	180	205	230	260	280	310	345	360

⅋ Denotes a bundle of 2 bars

NOTES

1. For details not shown and drainage notes see B3-8
2. For wall stem joint details see B0-3 3-3 and B0-3 3-4
3. For pile footing for design H=1200 use same footing dimensions as for design H=1800.

STATE OF CALIFORNIA
DEPARTMENT OF TRANSPORTATION

RETAINING WALL TYPE 1 H=1200 THROUGH 9100 mm

NO SCALE

ALL DIMENSIONS ARE IN MILLIMETERS UNLESS OTHERWISE SHOWN

B3-1

STD. PLAN B3-1

Return to Table of Contents

DIST	COUNTY	ROUTE	KILOMETER POST TOTAL PROJECT	SHEET NO.	TOTAL SHEETS

REGISTERED CIVIL ENGINEER

July 1, 1997
PLANS APPROVAL DATE

REGISTERED PROFESSIONAL ENGINEER James C. Moese No. C16576 Exp. 6-30-97 CIVIL STATE OF CALIFORNIA

The State of California or its officers or agents shall not be responsible for the accuracy or completeness of electronic copies of this plan sheet.

Metric

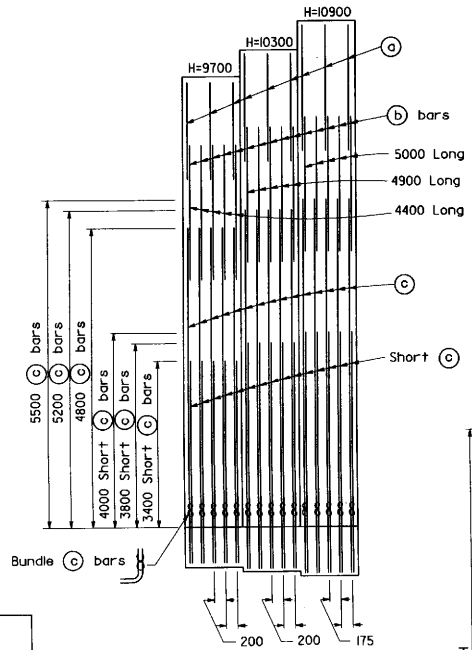

ELEVATION

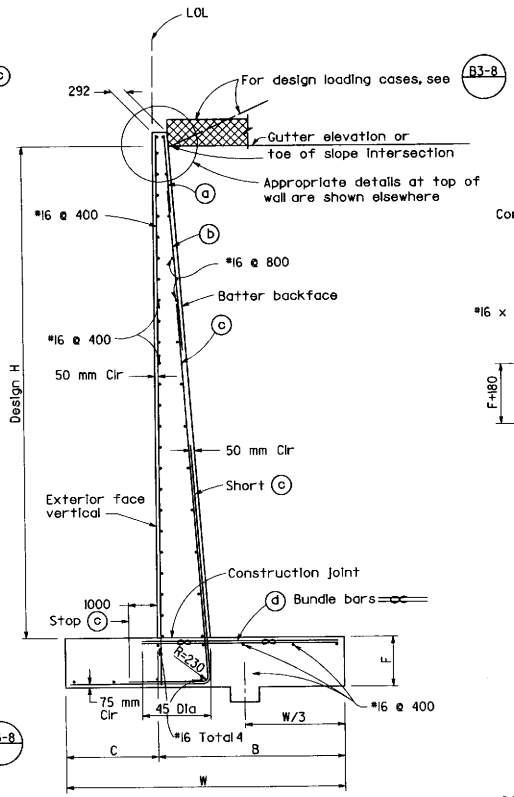

SPREAD FOOTING SECTION

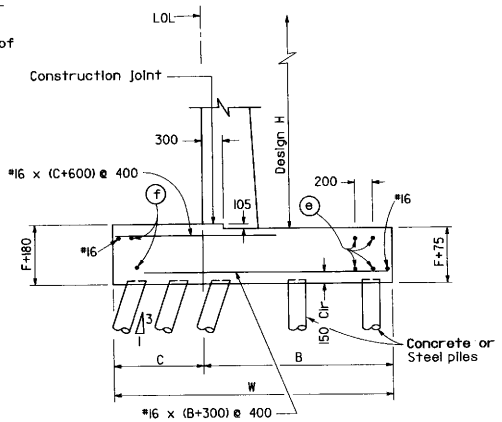

400 kN PILE FOOTING SECTION

Reinforcement detailed is to be placed in addition to that shown for spread footing. See Pile Layout on other sheets.

TABLE OF REINFORCING STEEL DIMENSIONS AND DATA

Design H		9700	10300	10900
W		5600	5900	6200
C		1800	1900	2000
B		3800	4000	4200
F Spread Footing		1000	1100	1200
Batter		100:8	100:8	100:8
ⓐ bars		#19@400	#19@400	#19@350
ⓑ bars		#29@200	#29@200	#29@175
ⓒ bars		#36@200 ∞	#36@200 ∞	#36@175 ∞
ⓓ bars		#29@200 ∞	#29@200 ∞	#29@175 ∞
Total ⓔ bars		6-#19	6-#19	6-#19
Total ⓕ bars		4-#16	4-#16	4-#16
Loading Case I	H Comp kN	110	125	140
	V Comp kN	265	300	330
	Toe Pr. kPa	300	325	350
Loading Case II	H Comp kN	165	185	210
	V Comp kN	365	410	455
	Toe Pr. kPa	370	400	435
Loading Case III	H Comp kN	130	145	160
	V Comp kN	295	330	370
	Toe Pr. kPa	380	400	425

∞ Denotes a bundle of 2 bars.

NOTES

1. For details not shown and drainage notes see B3-8
2. For wall stem joint details, see B0-3 3-3 and B0-3 3-4

STATE OF CALIFORNIA
DEPARTMENT OF TRANSPORTATION

RETAINING WALL TYPE 1 H=9700 THROUGH 10 900 mm

NO SCALE

ALL DIMENSIONS ARE IN MILLIMETERS UNLESS OTHERWISE SHOWN

B3-2

STD. PLAN B3-2

Return to Table of Contents

DIST	COUNTY	ROUTE	KILOMETER POST TOTAL PROJECT	SHEET NO.	TOTAL SHEETS

Caltrans Metric

REGISTERED CIVIL ENGINEER

July 1, 1997
PLANS APPROVAL DATE

REGISTERED PROFESSIONAL ENGINEER James C. Moese No. C16576 Exp. 6-30-97 CIVIL STATE OF CALIFORNIA

The State of California or its officers or agents shall not be responsible for the accuracy or completeness of electronic copies of this plan sheet.

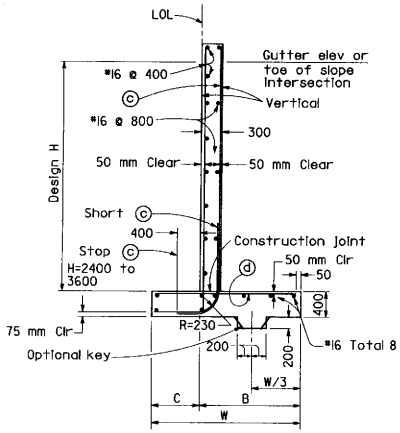

SPREAD FOOTING SECTION

Place concrete in toe against undisturbed material, except as permitted by the Engineer.

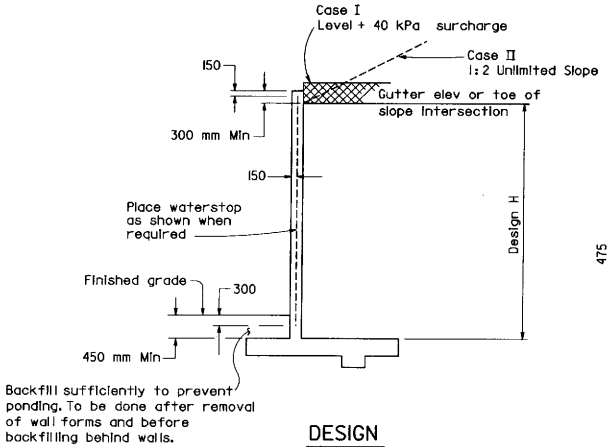

DESIGN

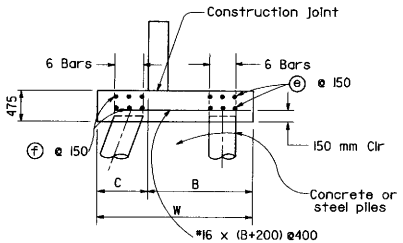

400 kN PILE FOOTING SECTION

Reinforcement detailed is to be placed in addition to that shown for spread footing. All piles not shown, see Pile Layout on other sheets.

For pile footing for Design H=1200 use same footing dimensions as for Design H=1800.

TABLE OF REINFORCING STEEL, DIMENSIONS AND DATA

Design H	1200	1800	2400	3000	3600
W	1000	1300	1600	1900	2200
C	300	400	500	600	700
B	700	900	1100	1300	1500
c bars	#16@400	#16@400	#16@200	#19@200	#25@200
d bars	#16@400	#16@400	#16@400	#16@200	#19@200
Total e bars	6-#19	6-#19	6-#19	6-#25	6-#25
Total f bars	—	—	—	6-#19	6-#19
Case I-Toe Press. kPa	75	95	110	125	135
Case II-Toe Press. kPa	50	70	90	110	130

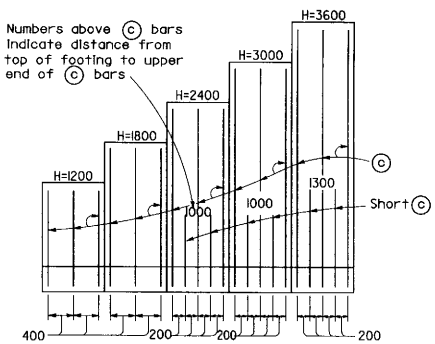

ELEVATION

NOTES

1. Retaining Wall Type 1A designed for Design Loading Cases I and II only.
2. For design notes, drainage notes, and other details, See B3-8.
3. For wall stem joint details, see B0-3/3-3 and B0-3/3-4.

STATE OF CALIFORNIA
DEPARTMENT OF TRANSPORTATION

RETAINING WALL TYPE 1A

NO SCALE

ALL DIMENSIONS ARE IN MILLIMETERS UNLESS OTHERWISE SHOWN

B3-3

STD. PLAN B3-3

Return to Table of Contents

DIST	COUNTY	ROUTE	KILOMETER POST TOTAL PROJECT	SHEET NO.	TOTAL SHEETS

REGISTERED CIVIL ENGINEER

July 1, 1997
PLANS APPROVAL DATE

REGISTERED PROFESSIONAL ENGINEER James C. Moose No. C16576 Exp. 6-30-97 CIVIL STATE OF CALIFORNIA

The State of California or its officers or agents shall not be responsible for the accuracy or completeness of electronic copies of this plan sheet.

Metric

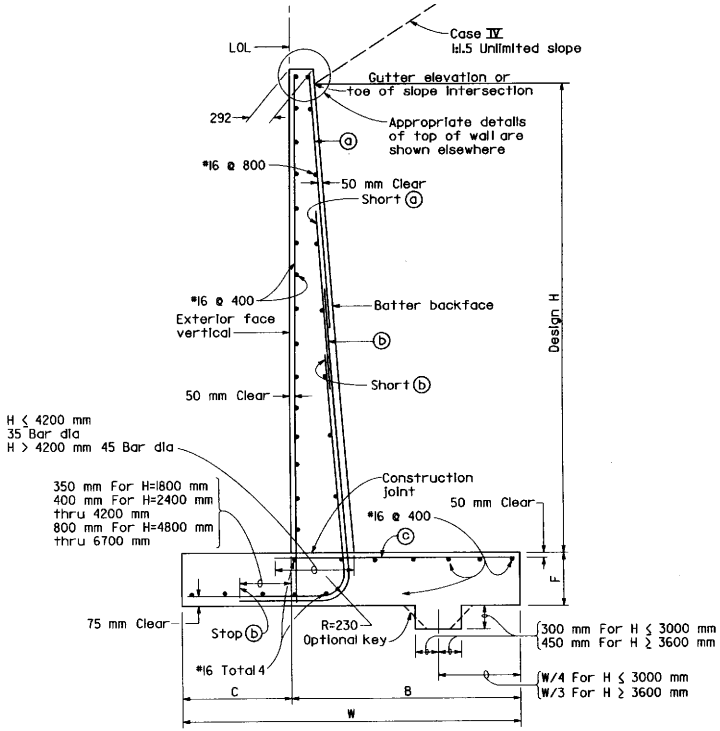

SPREAD FOOTING SECTION

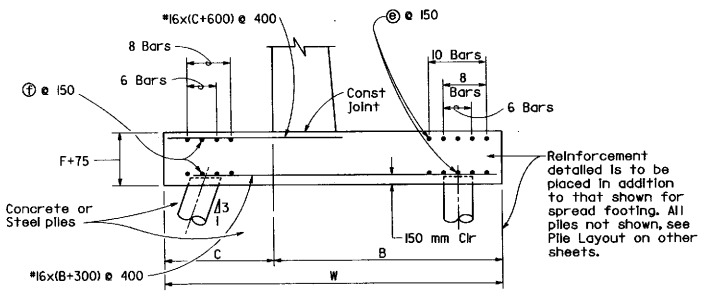

400KN PILE FOOTING SECTION

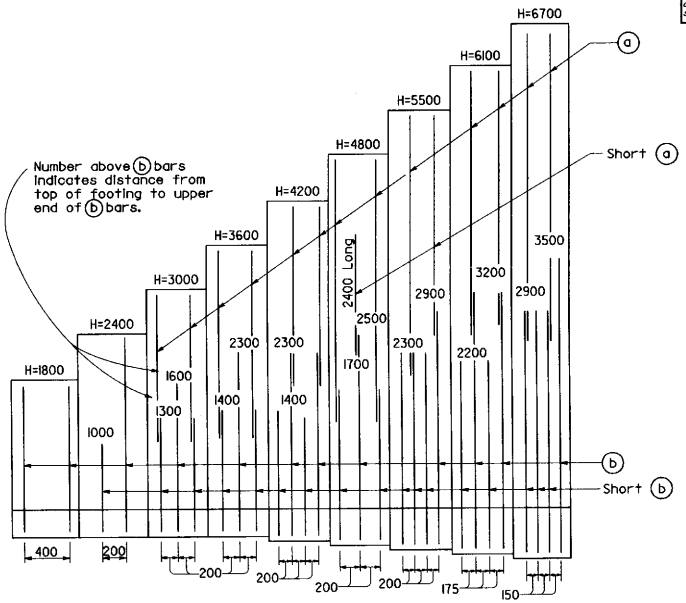

ELEVATION

TABLE OF REINFORCING STEEL DIMENSIONS AND DATA

Design H	1800	2400	3000	3600	4200	4800	5500	6100	6700
W	1200	1600	2000	2500	3000	3500	4000	4600	5400
C	400	500	550	650	750	850	950	1150	1350
B	800	1100	1450	1850	2250	2650	3050	3450	4050
F	400	400	400	400	450	550	650	750	850
Batter	100:4	100:4	100:4	100:4	100:4	100:4	100:5	100:6	100:7
ⓐ bars			#16@400	#16@400	#19@200	#19@200	#25@400	#25@350	#25@300
ⓑ bars	#16@400	#16@200	#19@200	#25@200	#29@200	#36@200	#36@200	#36@175	#36@150
ⓒ bars	#16@400	#16@400	#19@400	#19@190	#19@200	#25@200	#25@200	#25@175	#25@150
Total ⓔ bars	6-#19	6-#19	8-#25	8-#25	8-#25	8-#25	10-#19	10-#19	10-#19
Total ⓕ bars			8-#19	8-#19	8-#19	8-#19	6-#19	6-#19	6-#19
Toe Press KPa	125	155	185	215	240	275	315	335	335

NOTES

1. For design notes, drainage notes, and other details see (B3-8)
2. For wall stem joint details, see (B0-3 / 3-3) and (B0-3 / 3-4)

STATE OF CALIFORNIA
DEPARTMENT OF TRANSPORTATION

RETAINING WALL TYPE 2

NO SCALE

ALL DIMENSIONS ARE IN MILLIMETERS UNLESS OTHERWISE SHOWN

B3-4

STD. PLAN B3-4

Return to Table of Contents

DIST	COUNTY	ROUTE	KILOMETER POST TOTAL PROJECT	SHEET NO.	TOTAL SHEETS

REGISTERED CIVIL ENGINEER

July 1, 1997
PLANS APPROVAL DATE

REGISTERED PROFESSIONAL ENGINEER
James C. Moose
No. C16576
Exp. 6-30-97
CIVIL
STATE OF CALIFORNIA

The State of California or its officers or agents shall not be responsible for the accuracy or completeness of electronic copies of this plan sheet.

Metric

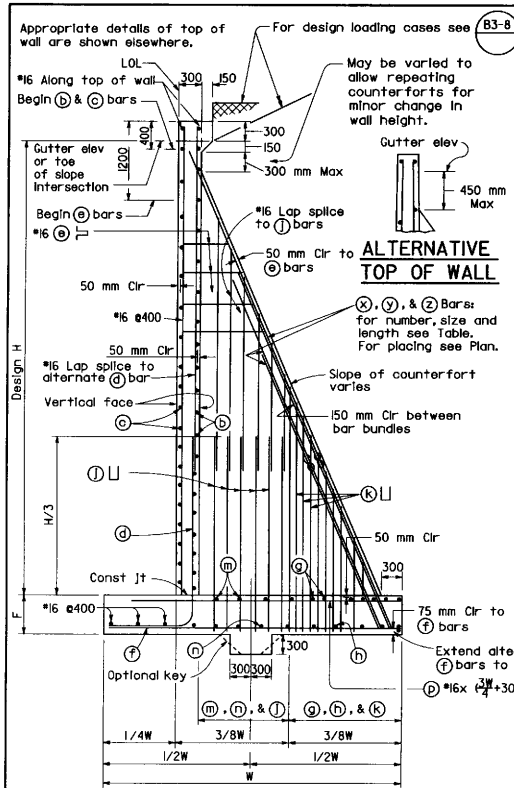

ALTERNATIVE TOP OF WALL

SPREAD FOOTING SECTION

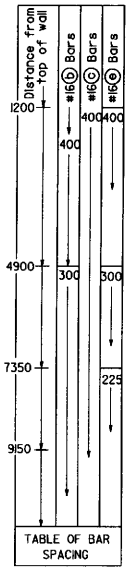

TABLE OF BAR SPACING

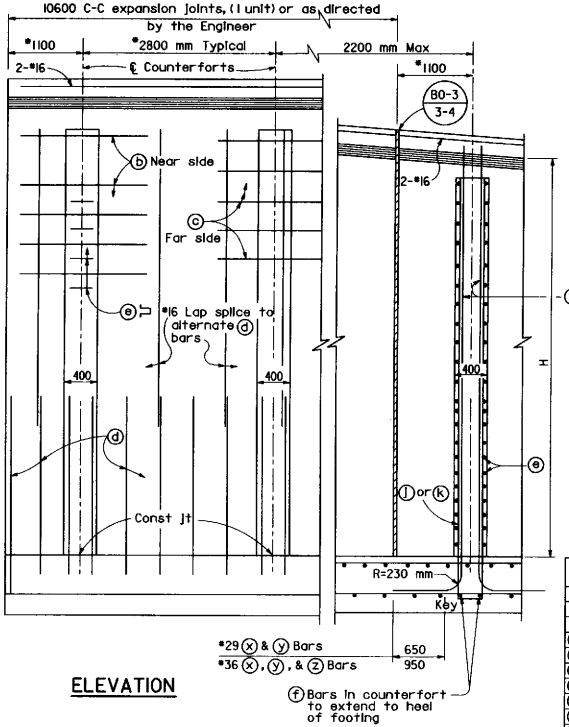

ELEVATION

*Dimensions 2800 mm and 1100 mm may be decreased proportionally but not increased without a special design.

Use footing dimensions and reinforcing and stem reinforcing in any unit as determined by maximum Design "H" in that unit. Use counterfort ⓧ, ⓨ, and ⓩ bars as determined by "H" at ℄ counterfort.

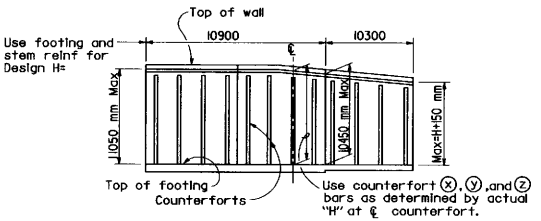

TABLE OF REINFORCING STEEL, DIMENSIONS AND DATA

Design H	5500	6100	6700	7300	7900	8500	9100	9700	10300	10900
W	3500	3800	4100	4450	4750	5050	5350	5650	5950	6250
F	400	400	450	450	500	550	650	700	750	850
ⓓ Bars, counterfort stem	*16@300	*16@300	*16@275	*16@225	*16@200	*16@175	*19@225	*19@200	*25@275	*25@250
ⓕ Bars, bottom toe	*19@300	*19@200	*25@275	*25@225	*25@200	*25@175	*25@225	*25@200	*29@275	*29@250
ⓕ Bars, length } Alt	1700	1900	2100	2400	2500	2600	2700	2800	3000	3100
ⓕ Bars, length } Alt	3350	3650	3950	4300	4600	4900	5200	5500	5800	6100
ⓖ Bars, top of heel	*19@200	—	—	—	—	—	—	—	—	→
ⓗ Bars, bottom heel	*19@200	—	—	—	—	—	—	—	—	→
ⓙ Bars, counterfort heel	*16@400	*16@400	*16@400	*16@350	*16@300	*16@300	*19@400	*19@400	*19@350	*19@350
ⓚ Bars, counterfort heel	*16@200	*16@200	*16@200	*16@175	*16@150	*16@150	*19@200	*19@200	*19@175	*19@175
ⓜ Bars, top of heel	*16@250	—	—	—	—	—	—	—	—	→
ⓝ Bars, bottom of heel	*16@350	—	—	—	—	—	—	—	—	→
ⓧ Bar	2-*29	2-*29	2-*29	2-*29	2-*36	2-*36	2-*36	2-*36	2-*36	2-*36
ⓧ Bar, length	6100	6800	7400	8100	8800	9400	10100	10700	11400	11900
ⓨ Bar	2-*29	2-*29	4-*29	4-*29	4-*36	4-*36	4-*36	4-*36	4-*36	4-*36
ⓨ Bar, length	2900	3700	4400	4900	5500	6300	6900	7600	8100	8500
ⓩ Bar	—	—	—	—	—	—	2-*36	2-*36	2-*36	2-*36
ⓩ Bar, length	—	—	—	—	—	—	3600	3700	4500	5200
Toe Pressure kPa										
Loading Case I	165	180	200	215	235	260	285	305	325	350
Loading Case II	190	210	235	260	290	320	350	380	410	450
Loading case III	200	225	255	280	310	330	350	370	390	415

For H=5500 thru 8500 pile footing, see 400 kN Pile Footing Section.

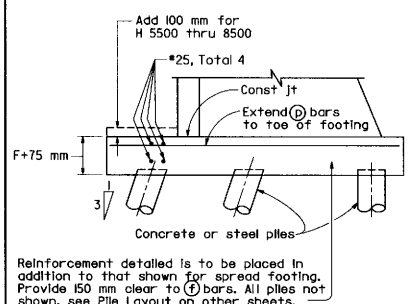

Reinforcement detailed is to be placed in addition to that shown for spread footing. Provide 150 mm clear to ⓕ bars. All piles not shown, see Pile Layout on other sheets.

400 kN PILE FOOTING SECTION

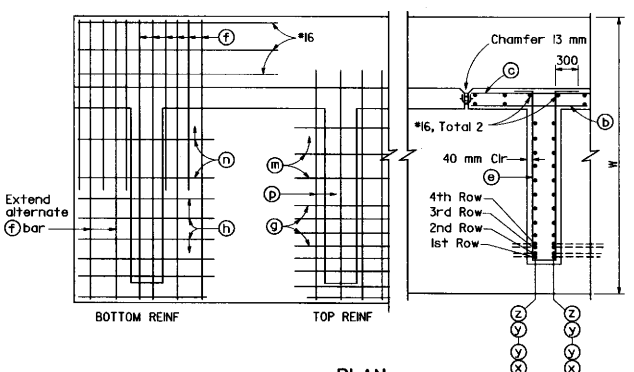

PLAN

NOTE:

For design notes and drainage notes and other details, see B3-8

Length of ⓧ, ⓨ, and ⓩ bars indicates distance from top of footing to upper end of bar measured along bar.

STATE OF CALIFORNIA
DEPARTMENT OF TRANSPORTATION

COUNTERFORT RETAINING WALL TYPE 3

NO SCALE

ALL DIMENSIONS ARE IN MILLIMETERS UNLESS OTHERWISE SHOWN

B3-5

STD. PLAN B3-5

Return to Table of Contents

DIST	COUNTY	ROUTE	KILOMETER POST TOTAL PROJECT	SHEET NO.	TOTAL SHEETS

REGISTERED CIVIL ENGINEER

July 1, 1997
PLANS APPROVAL DATE

REGISTERED PROFESSIONAL ENGINEER James C. Moore No. C16576 Exp. 6-30-97 CIVIL STATE OF CALIFORNIA

The State of California or its officers or agents shall not be responsible for the accuracy or completeness of electronic copies of this plan sheet.

California Metric

Appropriate details of top of wall are shown elsewhere.

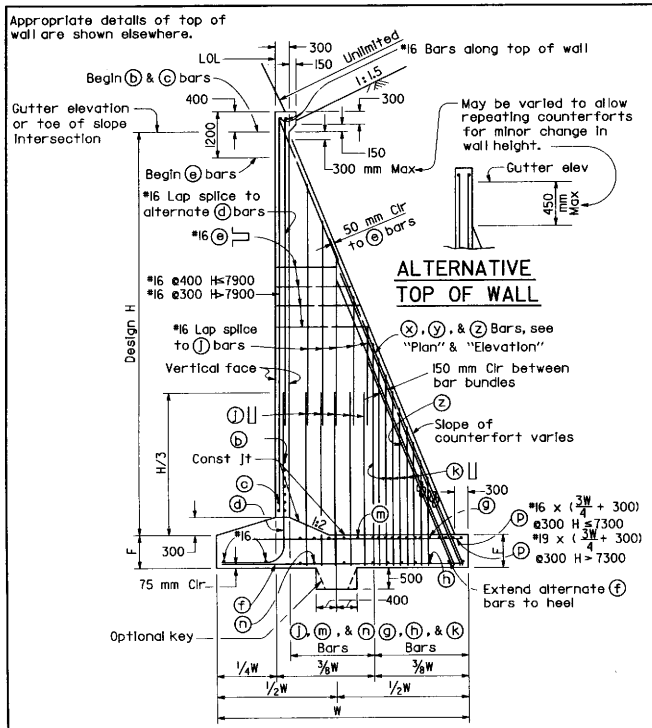

SPREAD FOOTING SECTION

TABLE FOR SPACING FOR ⓑ, ⓒ & ⓔ BARS

Distance below top of wall (Top of wall)	ⓑ	ⓒ	ⓔ
600	400	400	
1200	400	400	
1800	400	400	400
2400	400	400	400
3000	400	400	400
3600	300	400	400
4200	300	400	400
4900	300	400	400
5500	300	400	300
6100	300	400	300
6700	300	400	300
7300	300	400	300
7900	300	400	200
8500	300	400	200
9100	300	400	200

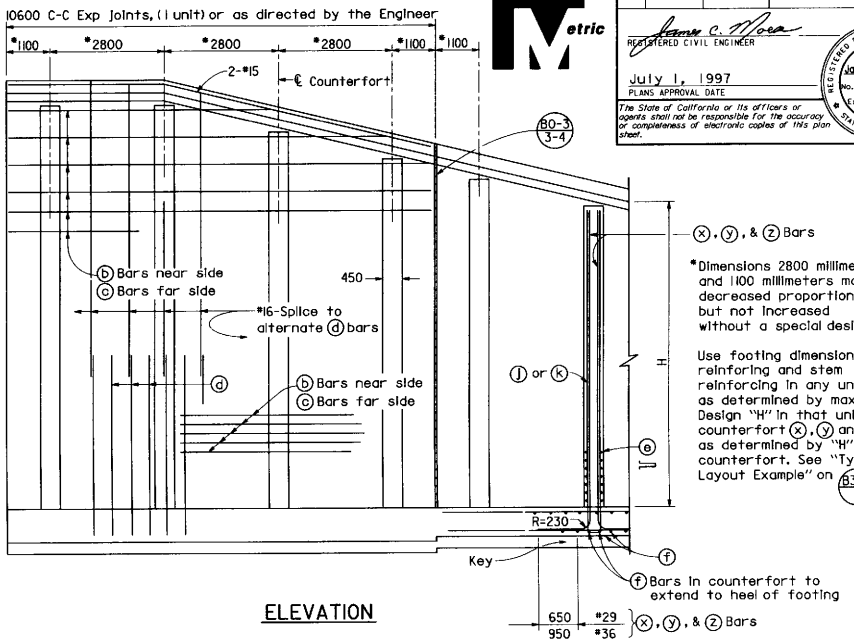

*Dimensions 2800 millimeters and 1100 millimeters may be decreased proportionally but not increased without a special design.

Use footing dimensions and reinforing and stem reinforcing in any unit as determined by maximum Design "H" in that unit. Use counterfort ⓧ, ⓨ and ⓩ bars as determined by "H" at ℄ counterfort. See "Typical Layout Example" on B3-5.

ELEVATION

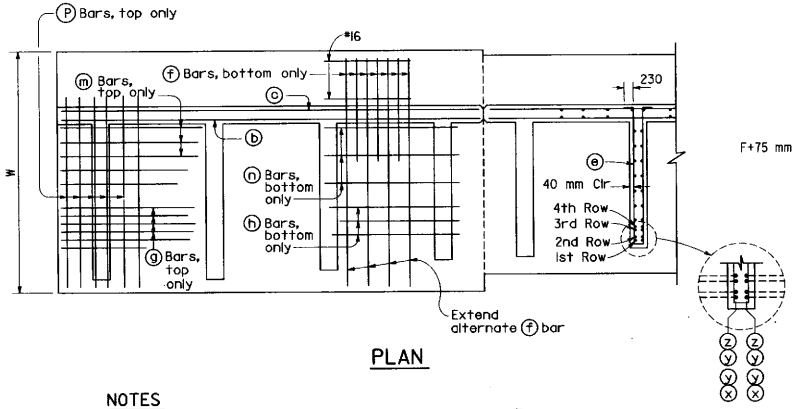

PLAN

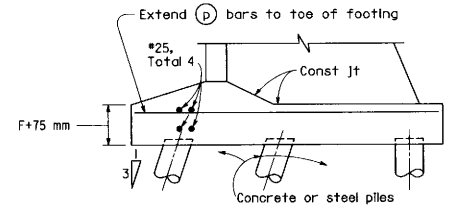

400 kN PILE FOOTING SECTION

Reinforcement detailed is to be placed in addition to that shown for spread footing. "Provide 150 mm clear to ⓕ bars". All piles not shown, see Pile Layout on other sheets.

TABLE OF REINFORCING STEEL, DIMENSIONS AND DATA

Design H	5500	6100	6700	7300	7900	8500	9100
W	3950	4300	4750	5150	5600	5950	6400
F	550	650	650	650	700	700	800
ⓧ Bars, edge counterfort	2-#29	2-#29	2-#29	2-#36	2-#36	2-#36	2-#36
ⓧ Bars, length	6300	6900	7550	8200	8850	9550	10200
ⓨ Bars, edge counterfort	4-#29	4-#29	4-#29	4-#36	4-#36	4-#36	4-#36
ⓨ Bars, length	4000	4800	5400	6400	6700	6900	7900
ⓩ Bars, edge counterfort			2-#29	2-#36	2-#36	2-#36	2-#36
ⓩ Bars, length			3200	3700	4100	4200	5000
ⓑ Bars, back face wall	#16		See Table for spacing				
ⓒ Bars, front face wall	#16		See Table for spacing				
ⓓ Bars, wall face	#16 @200	#16 @175	#16 @175	#19 @175	#19 @150	#25 @200	#25 @200
ⓔ Stirrups counterfort	#16		See Table for spacing				
ⓕ Bars, toe	#16 @200	#16 @175	#16 @175	#16 @175	#16 @150	#19 @200	#19 @200
ⓕ Bars, length	1900	2200	2400	2600	2800	3000	3200
ⓙ Bars, counterfort heel	#16 @300	#16 @300	#16 @300	#19 @300	#19 @300	#19 @300	#19 @300
ⓚ Bars, counterfort heel	#16 @150	#16 @150	#16 @150	#19 @150	#19 @150	#19 @150	#19 @150
ⓜ Bars, top of heel	#19 @400	←					→
ⓖ Bars, top of heel	#19 @200	←					→
ⓝ Bars, bottom of heel	#16 @400	←					→
ⓗ Bars, bottom of heel	#16 @200	←					→
Toe Pressure, kPa	310	355	385	415	455	485	520

NOTES

For Design and Drainage notes and other details see B3-8.

Length of ⓧ, ⓨ and ⓩ bars indicates distance from top of footing to upper end of bar.

STATE OF CALIFORNIA
DEPARTMENT OF TRANSPORTATION

COUNTERFORT RETAINING WALL TYPE 4

NO SCALE

ALL DIMENSIONS ARE IN MILLIMETERS UNLESS OTHERWISE SHOWN

B3-6

STD. PLAN B3-6

Return to Table of Contents

DIST	COUNTY	ROUTE	KILOMETER POST TOTAL PROJECT	SHEET NO.	TOTAL SHEETS

REGISTERED CIVIL ENGINEER

July 1, 1997
PLANS APPROVAL DATE

The State of California or its officers or agents shall not be responsible for the accuracy or completeness of electronic copies of this plan sheet.

REGISTERED PROFESSIONAL ENGINEER James C. Moese No. C16576 Exp. 6-30-97 CIVIL STATE OF CALIFORNIA

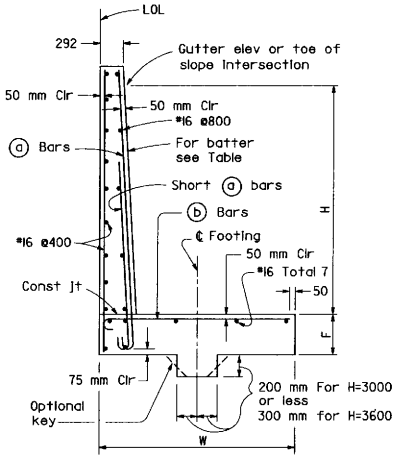

SPREAD FOOTING SECTION

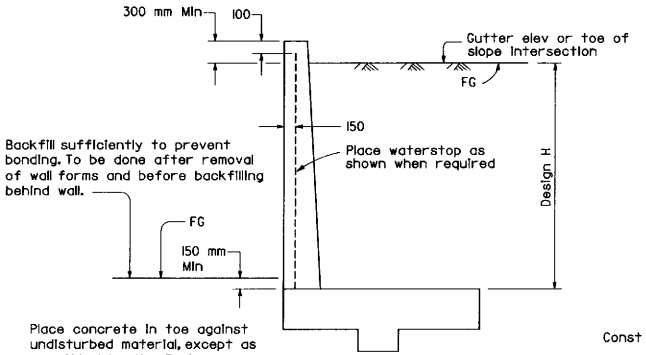

DESIGN

For drainage notes and other details, see (B3-8)

MAX PILE SPACING FOR 400 kN PILES

Design H	Front Row 1:3 Batter	Back Row Vertical
1200	5400	5400
1800	3600	5400
2400	2700	5400
3000	1800	3600
3600	1200	2400

For actual spacing, see Wall Layout.

Pile layout does not apply to Case IV conditions.

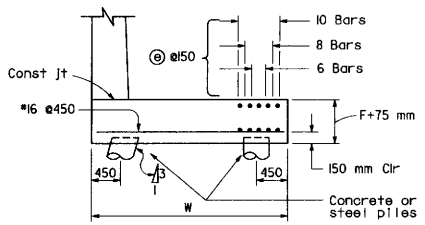

Reinforcement detailed is to be placed in addition to that shown for spread footings.

◉ For Design H=1200 use W=1550
All others from table

400 kN PILE FOOTING SECTION

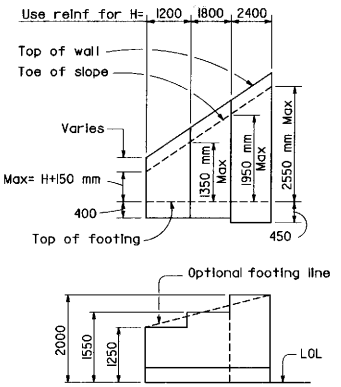

TYPICAL LAYOUT EXAMPLE

For joints required, see (B0-3 3-3) & (B0-3 3-4)

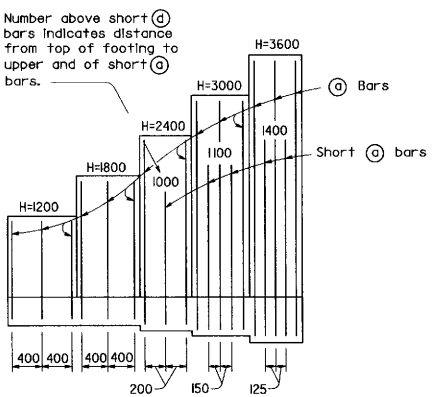

ELEVATION

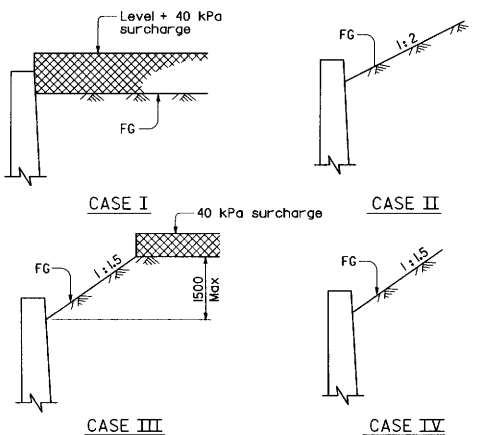

DETAIL OF DESIGN LOADING CASES

Case I Level +40 kPa surcharge
Case II 1:2 Unlimited slope
Case III 1:1.5 Limited slope (1500 max height) +40 kPa Surcharge
Case IV 1:1.5 Unlimited slope

NOTES

Design Conditions:

Design H may be exceeded by 150 mm before going to the next size. Special footing design is required where foundation material is incapable of supporting toe pressure loads listed in table.

Design Data:

f_c = 10 MPa f'_c = 25 MPa f_s = 168 MPa n = 10 earth = 19 kN/m^3
Case I- Wall design for equivalent fluid pressure = 4.2 and 5.6 kPa/m.
Case II, III, IV - Wall design is based on Rankine's formula with ø = 33°-42'.

TABLE OF REINFORCING STEEL DIMENSIONS AND DATA

Design H		◉ 1200	1800	2400	3000	3600
W		1250	1550	2000	2450	2900
F Spread Ftg		400	400	450	450	550
Batter		None	None	None	100:3	100:3
	ⓐ Bars	#16@400	#16@400	#16@400	#16@300	#16@250
Short	ⓐ Bars	None	None	#16@400	#16@300	#16@250
	ⓑ Bars	#16@400	#16@400	#16@200	#16@150	#16@125
Total	ⓔ Bars	8-#19	8-#19	10-#19	8-#19	6-#19
Toe Pressure	Case I kPa	80	105	120	145	170
	Case II kPa	75	100	130	165	195
	Case III kPa	80	110	140	185	210
	Case IV kPa	95	155	200	255	310

STATE OF CALIFORNIA
DEPARTMENT OF TRANSPORTATION

RETAINING WALL TYPE 5

NO SCALE

ALL DIMENSIONS ARE IN MILLIMETERS UNLESS OTHERWISE SHOWN

B3-7

STD. PLAN B3-7

Return to Table of Contents

DIST	COUNTY	ROUTE	KILOMETER POST TOTAL PROJECT	SHEET NO.	TOTAL SHEETS

REGISTERED CIVIL ENGINEER

July 1, 1997
PLANS APPROVAL DATE

REGISTERED PROFESSIONAL ENGINEER — James C. Moore — No. C16576 — Exp. 6-30-97 — CIVIL — STATE OF CALIFORNIA

The State of California or its officers or agents shall not be responsible for the accuracy or completeness of electronic copies of this plan sheet.

Caltrans Metric

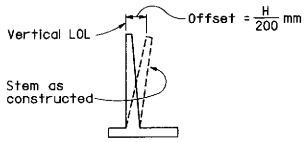

APPROXIMATE WALL OFFSET VALUES

Not required for wall Types 3 and 4.

Values for offsetting forms to be determined by the Engineer.

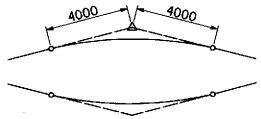

8000 mm VC AT TOP OF WALL SLOPE CHANGE

Where shown on the plans

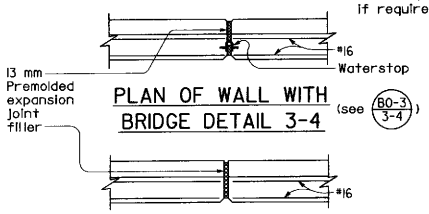

PLAN OF WALL WITH BRIDGE DETAIL 3-4

(see B0-3/3-4)

PLAN OF WALL WITH EXPANSION JOINT ONLY

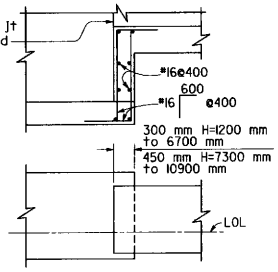

FOOTING STEP

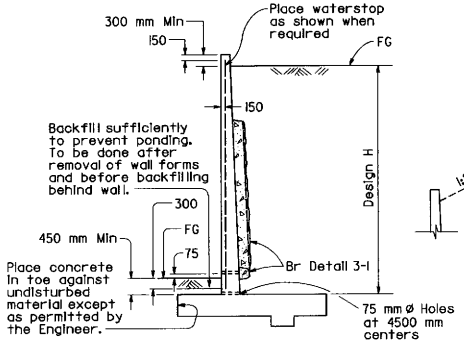

DESIGN AND DRAINAGE

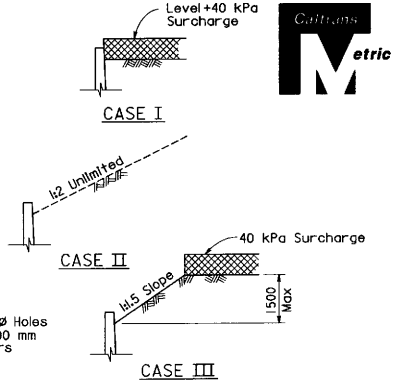

DETAIL OF DESIGN LOADING CASES

CASE I	Level +40 kPa Surcharge
CASE II	1:2 Unlimited Slope
CASE III	1:1.5 Limited Slope (1500 Max height) +40 kPa Surcharge

NOTE: Surcharge Limits Shown Apply To Retaining Walls Type 1 and 3.

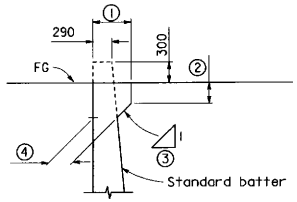

Dimensions ①, ② and ③ to be as shown elsewhere in the Project Plans.

④ Stem width at base of haunch to be determined as shown.

STEM WIDTH AT BASE OF HAUNCH

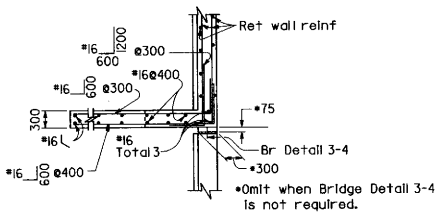

PLAN
(For return wall Type "A")

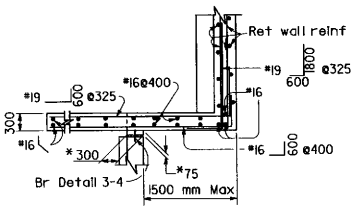

PLAN
(For return wall Type "B")

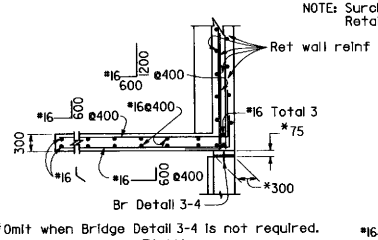

*Omit when Bridge Detail 3-4 is not required.

PLAN
(For return wall Type "C")

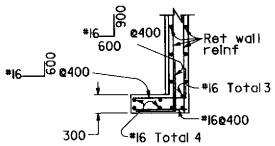

PLAN
(For return wall Type "D")

NOTES

Design Conditions:

Design H may be exceeded by 150 millimeters before going to the next size. Special footing design is required where foundation material is incapable of supporting toe pressure listed in table.

Return wall not required unless shown elsewhere.

Design Data:

f_c = 10 MPa f'_c = 25 MPa f_s = 168 MPa

n = 10 earth = 19 kN/m³

40 kPa surcharge:

Equivalent fluid pressure =

5.6 kPa/m maximum for determination of toe pressure.

4.2 kPa/m minimum for determination of heel pressure.

Earth pressures for 1:2 unlimited slope, 1:1.5 slope, and 1:1.5 unlimited slope, determined from Rankine's formula with Ø=33°-42'.

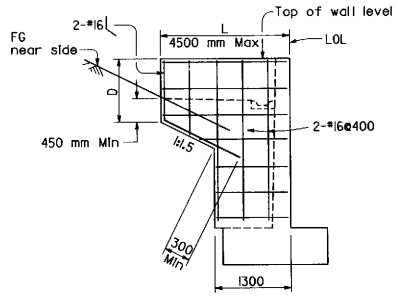

ELEVATION

RETURN WALL TYPE "A"

Use where H=2400 mm or less

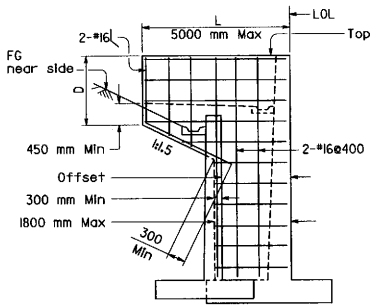

ELEVATION

RETURN WALL TYPE "B"

Use where H=3000 mm or more on offset walls

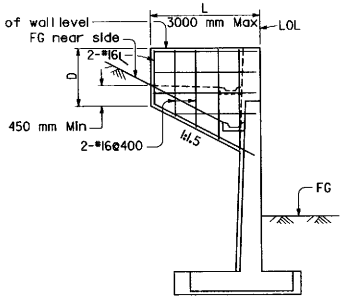

ELEVATION

RETURN WALL TYPE "C"

Use where H=3000 or more on straight walls

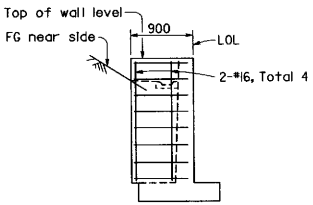

ELEVATION

RETURN WALL TYPE "D"

Use where H=1800 or less

STATE OF CALIFORNIA
DEPARTMENT OF TRANSPORTATION

RETAINING WALL DETAILS NO. 1

NO SCALE

ALL DIMENSIONS ARE IN MILLIMETERS UNLESS OTHERWISE SHOWN

B3-8

STD. PLAN B3-8

Return to Table of Contents

DIST	COUNTY	ROUTE	KILOMETER POST TOTAL PROJECT	SHEET NO.	TOTAL SHEETS

REGISTERED CIVIL ENGINEER

July 1, 1997
PLANS APPROVAL DATE

The State of California or its officers or agents shall not be responsible for the accuracy or completeness of electronic copies of this plan sheet.

REGISTERED PROFESSIONAL ENGINEER James C. Moese No. C16576 Exp. 6-30-97 CIVIL STATE OF CALIFORNIA

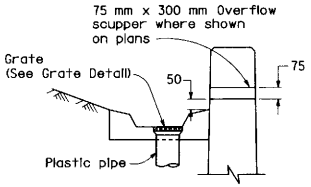

WALL DRAIN DETAIL
Scale: 1:10

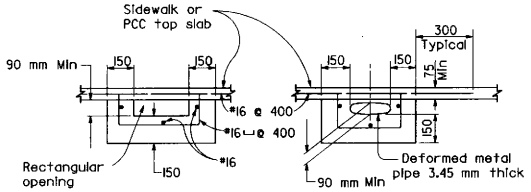

NOTE
Area of opening to be not less than that of pipe from wall gutter. Make opening transition in wall. Edge opening in curb face to 19 mm minimum radius.

OUTLET DETAIL - SECTION B-B
Scale: 1:10

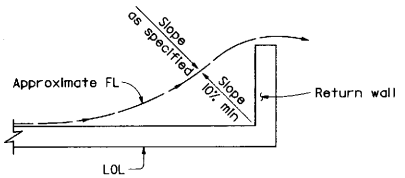

WALL DRAINAGE
WHERE GUTTER NOT REQUIRED
Scale: 1:50

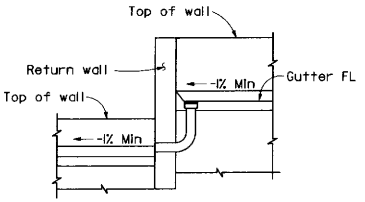

SECTION A-A

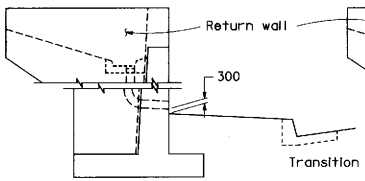

RETAINING WALL,
FACE OF WALL OUTLET
Scale: 1:50

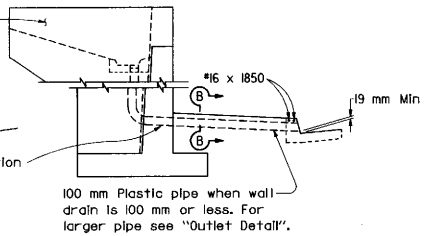

RETAINING WALL, GUTTER OUTLET
Scale: 1:50

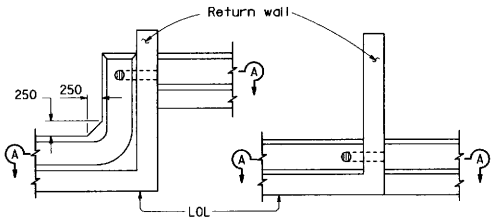

PLAN-OFFSET WALL PLAN-CONTINUOUS WALL

DRAIN THROUGH RETURN WALL
Scale: 1:50

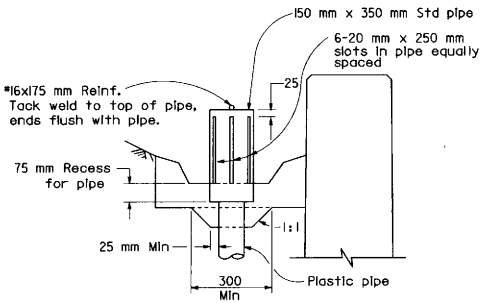

WALL DRAIN WITH PIPE DOME

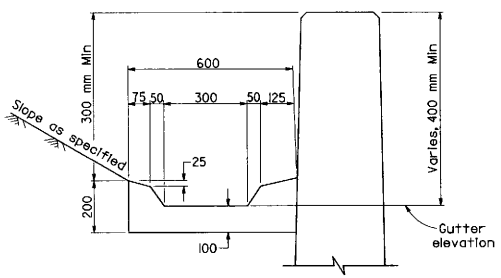

TYPICAL GUTTER DETAIL
Scale: 1:10

GRATE DETAIL
Sizes to fit standard hubs

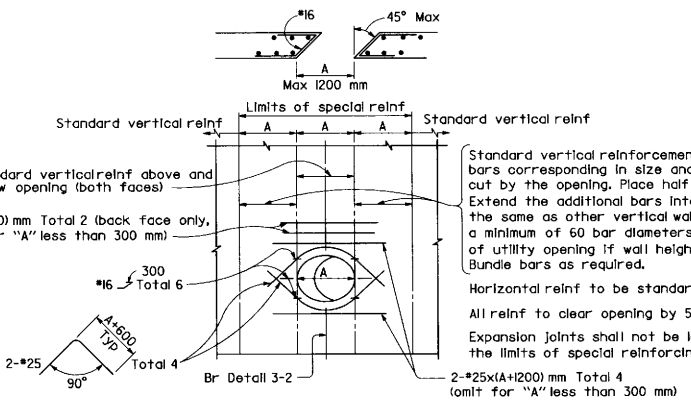

Standard vertical reinforcement plus additional vertical bars corresponding in size and number to bars cut by the opening. Place half on each side. Extend the additional bars into the footing the same as other vertical wall reinforcement and to a minimum of 60 bar diameters above the top of utility opening if wall height permits. Bundle bars as required.

Horizontal reinf to be standard except as shown.

All reinf to clear opening by 50 mm minimum.

Expansion joints shall not be located within the limits of special reinforcing.

RETAINING WALL UTILITY OPENING
Max size of opening (A) = 1200 mm
To be used in conjunction with sheet B3-8

STATE OF CALIFORNIA
DEPARTMENT OF TRANSPORTATION

RETAINING WALL DETAILS NO. 2

NO SCALE

ALL DIMENSIONS ARE IN MILLIMETERS UNLESS OTHERWISE SHOWN

B3-9

STD. PLAN B3-9

Return to Table of Contents

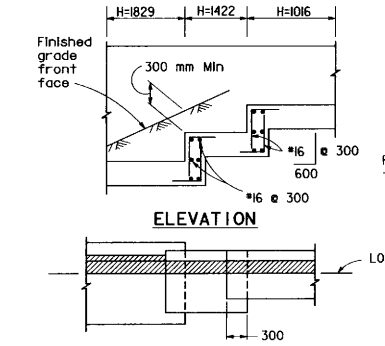

FOOTING STEP DETAILS

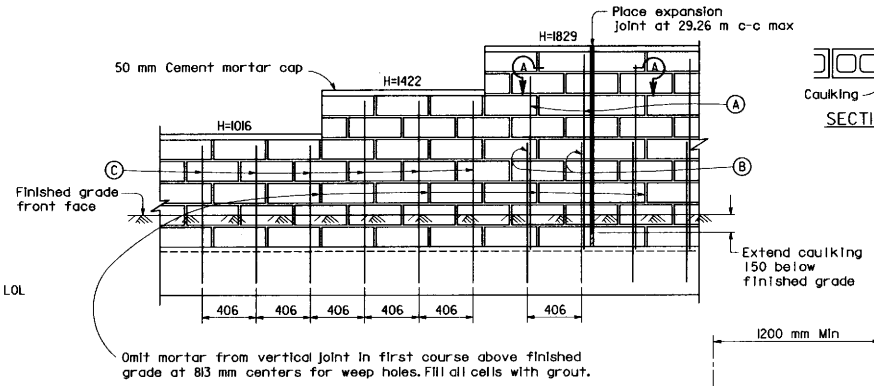

ELEVATION - MASONARY CONSTRUCTION

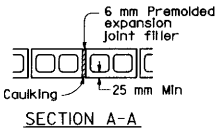

SECTION A-A

DIST	COUNTY	ROUTE	KILOMETER POST TOTAL PROJECT	SHEET NO.	TOTAL SHEETS

REGISTERED CIVIL ENGINEER

July 1, 1997
PLANS APPROVAL DATE

The State of California or its officers or agents shall not be responsible for the accuracy or completeness of electronic copies of this plan sheet.

REGISTERED PROFESSIONAL ENGINEER James C. Moese No. C16576 Exp. 6-30-97 CIVIL STATE OF CALIFORNIA

DESIGN DATA

Masonry: f_m = 3.5 MPa f'_m = 10.5 MPa f_s = 168 MPa n = 20

Reinforced Concrete: f_c = 10 MPa f'_c = 25 MPa f_s = 168 MPa n = 10

Earth = 19 kN/m^3

Minimum allowable soil bearing capacity of foundation material = 95 kPa

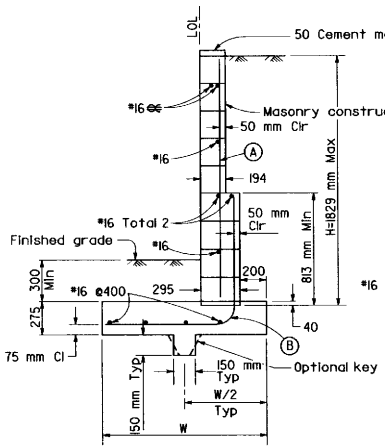

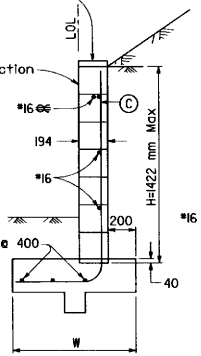

TYPE 6A WALL

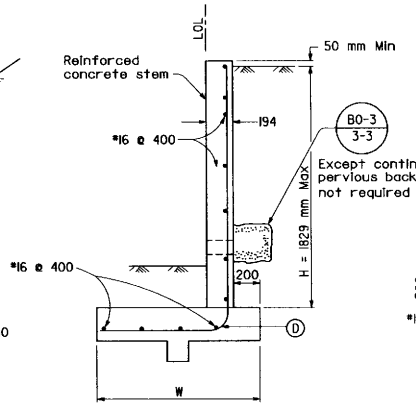

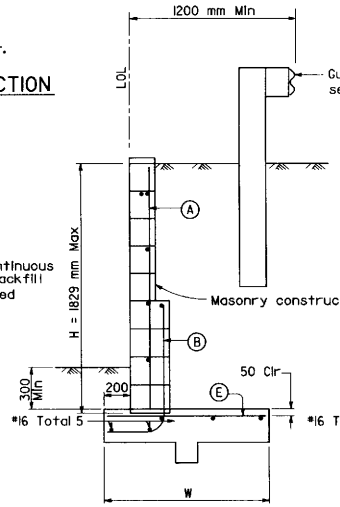

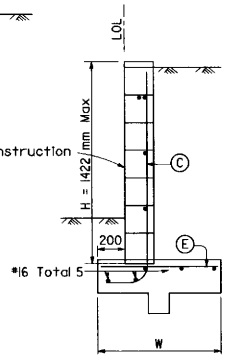

TYPE 6B WALL

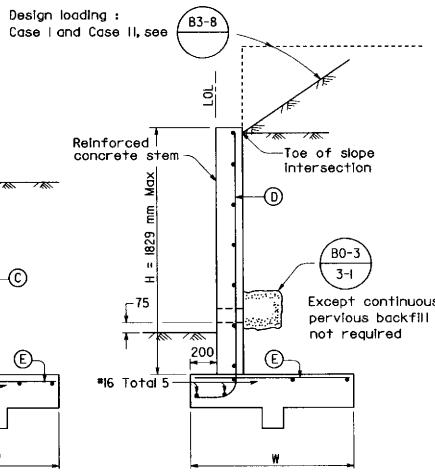

Type	Design H	1016	1219	1422	1626	1829
6A	W	1000	1100	1200	1300	1400
6A	A				#16@406	#16@406
6A	B				#16@406	#16@406
6A	C	#16@406	#16@406	#16@406		
6A	D	#16@375	#16@375	#16@375	#16@375	#16@300

NOTES

1. For details not shown at "6B", see "6A".
2. Type 6 retaining wall shall be limited to use for walls of Design H of 1829 mm or less.
3. Where traffic is adjacent to the top of wall, guard rails should be set back from the top front face of wall at least 1200 mm.
4. Unless otherwise stipulated, the contractor will have the option of constructing the Type 6 walls of either masonry or reinforced concrete.
5. For reinforced concrete wallstem joint details, See B0-3/3-3 and B0-3/3-4

Type	Design H	1016	1219	1422	1626	1829
6B	W	850	950	1050	1150	1250
6B	A				#16@406	#16@406
6B	B				#16@406	#16@406
6B	C	#16@406	#16@406	#16@406		
6B	D	#16@375	#16@375	#16@375	#16@375	#16@300
6B	E	#16@375	#16@375	#16@375	#16@375	#16@300

STATE OF CALIFORNIA
DEPARTMENT OF TRANSPORTATION

RETAINING WALL TYPE 6 1829 mm MAXIMUM

NO SCALE

ALL DIMENSIONS ARE IN MILLIMETERS UNLESS OTHERWISE SHOWN

B3-11

STD. PLAN B3-11

Return to Table of Contents

DIST	COUNTY	ROUTE	KILOMETER POST TOTAL PROJECT	SHEET NO.	TOTAL SHEETS

Metric

R. A. Rogerson
REGISTERED CIVIL ENGINEER

July 1, 1997
PLANS APPROVAL DATE

R. A. Rogerson
No. C25712
Exp. 12-31-97
CIVIL
REGISTERED PROFESSIONAL ENGINEER
STATE OF CALIFORNIA

The State of California or its officers or agents shall not be responsible for the accuracy or completeness of electronic copies of this plan sheet.

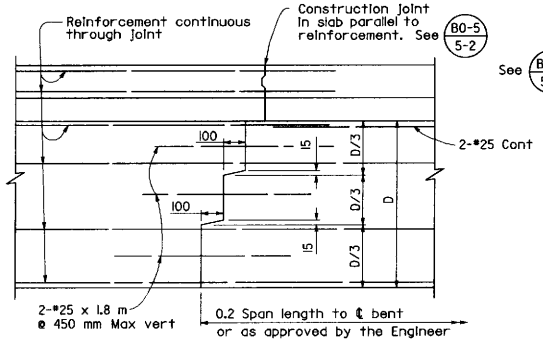

TRANSVERSE GIRDER CONSTRUCTION JOINTS

DETAIL J-3

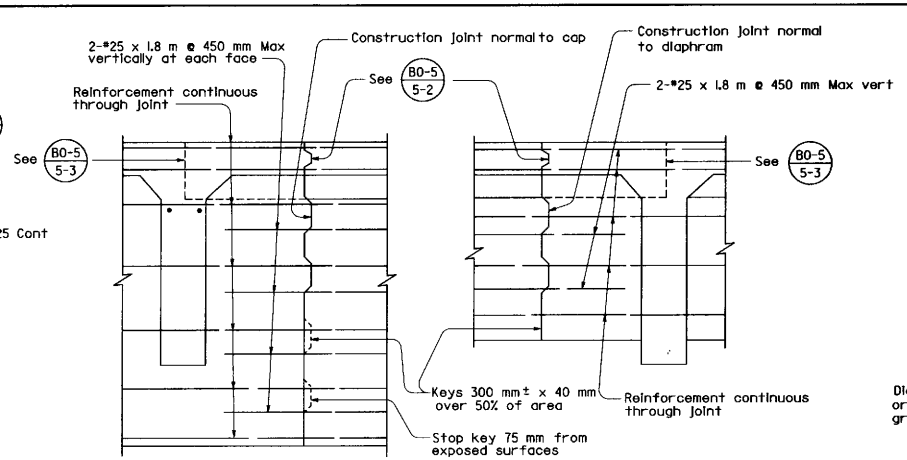

LONGITUDINAL CONSTRUCTION JOINTS

DETAIL J-4

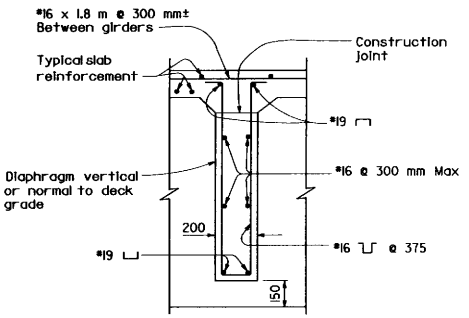

INTERMEDIATE DIAPHRAGM SECTION

DETAIL D-1

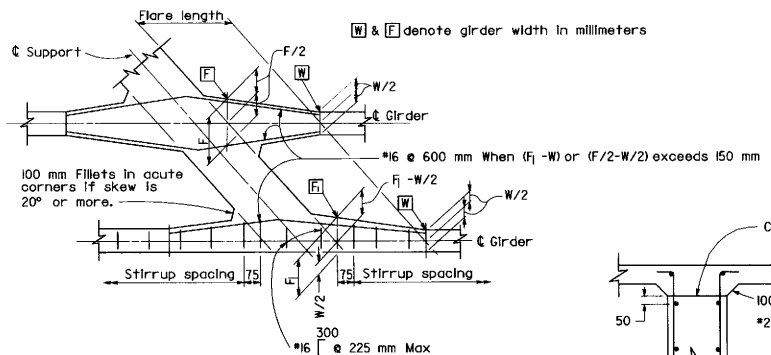

TYPICAL GIRDER FLARE AND STIRRUP SPACING DIAGRAM

DETAIL S-3

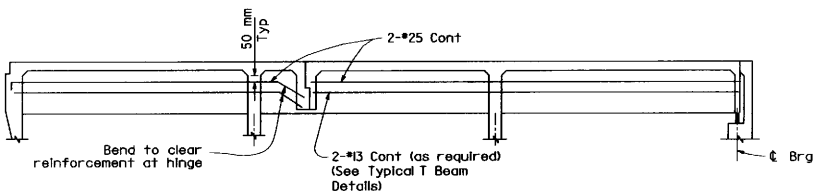

GIRDER WEB REINFORCEMENT

DETAIL J-1

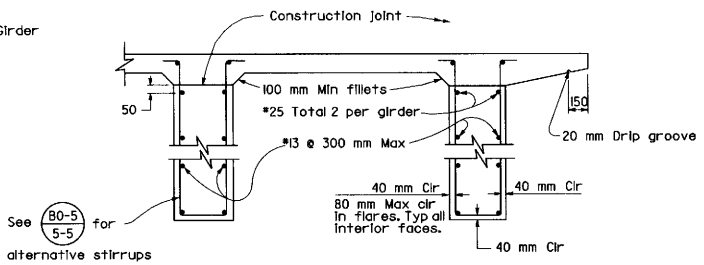

TYPICAL T BEAM DETAILS

DETAIL T-1

STATE OF CALIFORNIA
DEPARTMENT OF TRANSPORTATION

T-BEAM DETAILS

NO SCALE

ALL DIMENSIONS ARE IN MILLIMETERS UNLESS OTHERWISE SHOWN

B6-1

STD. PLAN B6-1

Return to Table of Contents

DIST	COUNTY	ROUTE	KILOMETER POST TOTAL PROJECT	SHEET NO.	TOTAL SHEETS

Caltrans Metric

R.A. Rogerson
REGISTERED CIVIL ENGINEER

July 1, 1997
PLANS APPROVAL DATE

REGISTERED PROFESSIONAL ENGINEER R.A. Rogerson No. C25712 Exp. 12-31-97 CIVIL STATE OF CALIFORNIA

The State of California or its officers or agents shall not be responsible for the accuracy or completeness of electronic copies of this plan sheet.

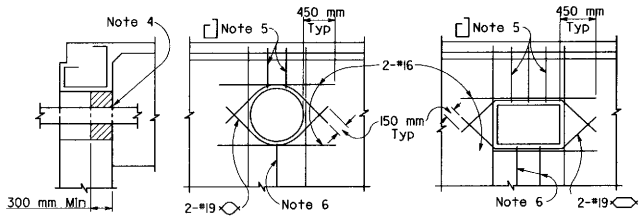

DETAIL U-11

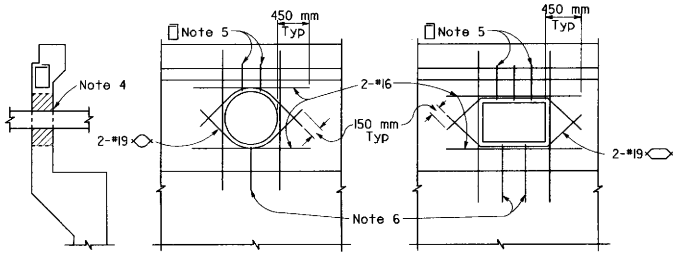

DETAIL U-12

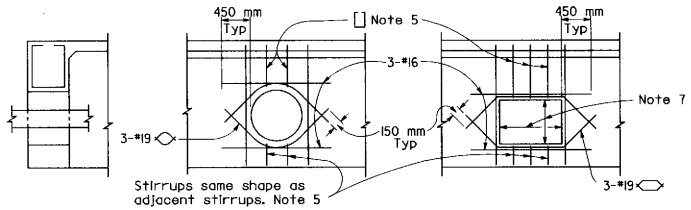

DETAIL U-13

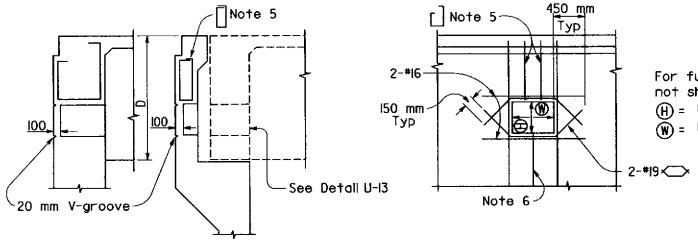

DETAIL U-14
(For future utility opening)

ABUTMENT DIAPHRAGMS

For future utility opening dimensions not shown on Project Plans use:
(H) = 1/3 D or 375 mm minimum, whichever is greater.
(W) = 1/3 D or 375 mm minimum, whichever is greater.

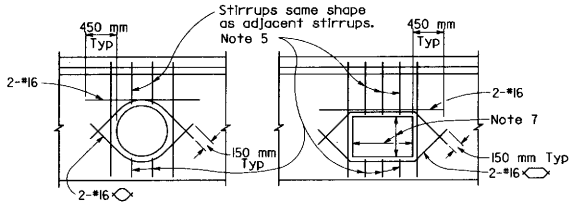

DETAIL U-15

INTERMEDIATE DIAPHRAGMS

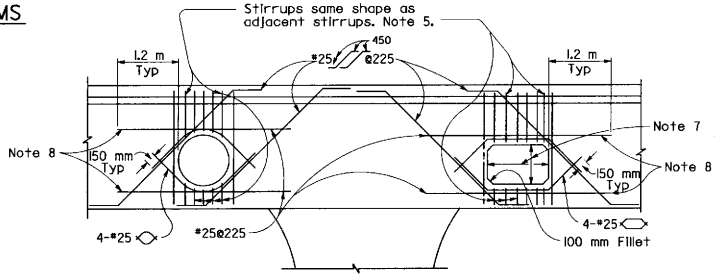

DETAIL U-17

BENT CAPS

Near or between columns

NOTES

1. The exact location, elevation, size and direction of openings shall be in accordance with the Project Plans and as directed by the Engineer.
2. Girders not shown. See Project Plans.
3. All reinforcement detailed to be placed in addition to reinforcement shown on Project Plans.
4. Seal utilities at abutments with concrete or mortar, after tightly wrapping utility with 2 layers of 7 kg building paper.
5. Reinforcement to be same bar size, and 2/3 the spacing of adjacent reinforcement shown on Project Plans.
6. Reinforcement to be same bar size and shape as adjacent reinforcement shown on Project Plans.
7. For future utility opening dimensions, see Project Plans and Detail U-14.
8. When there is insufficient space to place reinforcement as shown, hook reinforcement into exterior girder.

STATE OF CALIFORNIA
DEPARTMENT OF TRANSPORTATION

UTILITY OPENINGS
T-BEAM

NO SCALE

ALL DIMENSIONS ARE IN MILLIMETERS UNLESS OTHERWISE SHOWN

B6-10

Return to Table of Contents

DIST	COUNTY	ROUTE	KILOMETER POST TOTAL PROJECT	SHEET NO.	TOTAL SHEETS

Caltrans Metric

Roberto Lacalle
REGISTERED CIVIL ENGINEER

July 1, 1997
PLANS APPROVAL DATE

REGISTERED PROFESSIONAL ENGINEER Roberto Lacalle No. C42423 EXP. 3-31-00 CIVIL STATE OF CALIFORNIA

The State of California or its officers or agents shall not be responsible for the accuracy or completeness of electronic copies of this plan sheet.

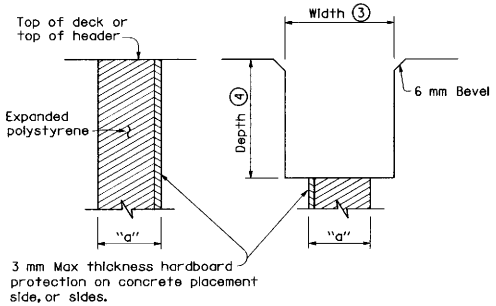

FORMING DETAIL

SAWCUT DETAIL

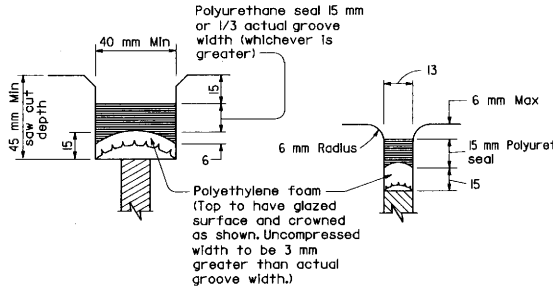

TYPE A SEAL
Movement rating = 15 mm Max

TYPE AL SEAL
Longitudinal joints only

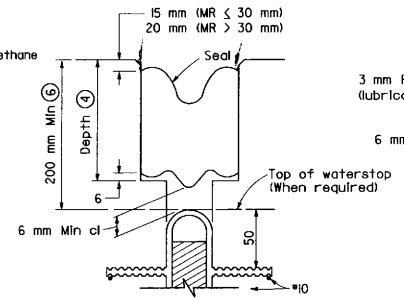

TYPE B JOINT SEAL
IN MINIMUM WIDTH POSITION (W_2)

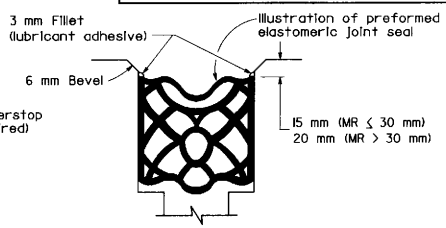

TYPE B SEAL
Movement rating > 15 mm

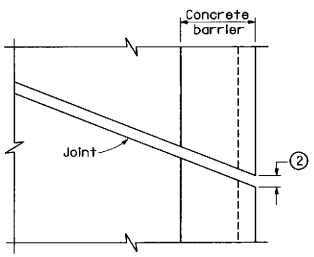

PLAN OF JOINT

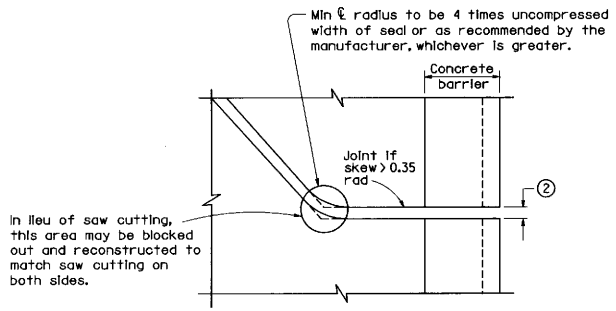

PLAN OF ANGLED JOINT

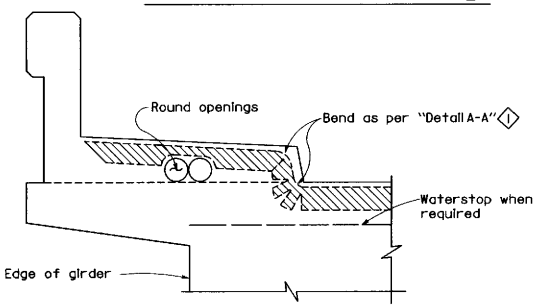

Type "B" seal shown. Type "A" seals to comform to the general path of seal shown.

CONCRETE BARRIER AND SIDEWALK

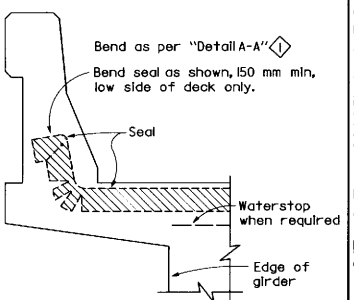

CONCRETE BARRIER

JOINT SEAL DETAILS

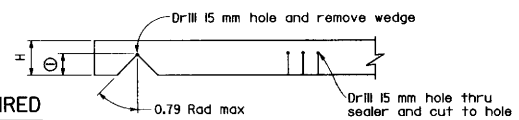

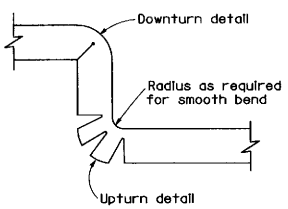

DETAIL A-A

DIMENSIONS "a" OF JOINT REQUIRED

Movement Rating (MR) ⑤	Bridge Type	"a" Dimension Deck Concrete Placed		
		Winter	Fall-Spring	Summer
50 mm	All except CIP/PS	40 mm	30 mm	20 mm
	CIP/PS	30 mm	25 mm	15 mm
40 mm	All except CIP/PS	30 mm	25 mm	15 mm
	CIP/PS	25 mm	20 mm	15 mm
30 mm	All except CIP/PS	25 mm	20 mm	15 mm
	CIP/PS	20 mm	15 mm	15 mm
15 mm	All except CIP/PS	20 mm	20 mm	15 mm
	CIP/PS	15 mm	15 mm	15 mm

NOTES

① Make smooth cuts from the bottom of seal to 40 mm clear of top leaving at least one complete cell between the top of the cut and top of the seal. When necessary cut back of seal to clear conduit and round openings.

② Opening in barrier to match width of sawn deck joint.

③ Sawcut groove widths shall be as ordered by the Engineer.

④ Depth of sawcut: Type A - Depth to be shown above.
Type B - Depth to be equal to or greater than the depth of seal measured along the contact surface, when compressed to minimum width position (W_2) plus dimensions shown above.

⑤ MR (movement rating) as shown on other detail plans.

⑥ Other depths must be approved by the Engineer.

STATE OF CALIFORNIA
DEPARTMENT OF TRANSPORTATION

JOINT SEALS (MAXIMUM MOVEMENT RATING=50 mm)

NO SCALE

ALL DIMENSIONS ARE IN MILLIMETERS UNLESS OTHERWISE SHOWN

B6-21

STD. PLAN B6-21

Return to Table of Contents

DIST	COUNTY	ROUTE	KILOMETER POST TOTAL PROJECT	SHEET NO.	TOTAL SHEETS

Caltrans Metric

R A Rogerson
REGISTERED CIVIL ENGINEER

July 1, 1997
PLANS APPROVAL DATE

REGISTERED PROFESSIONAL ENGINEER R. A. Rogerson No. C25712 Exp. 12-31-97 CIVIL STATE OF CALIFORNIA

The State of California or its officers or agents shall not be responsible for the accuracy or completeness of electronic copies of this plan sheet.

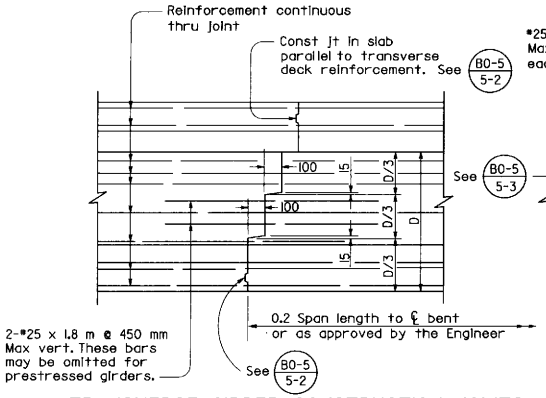

TRANSVERSE GIRDER CONSTRUCTION JOINTS

DETAIL J-3

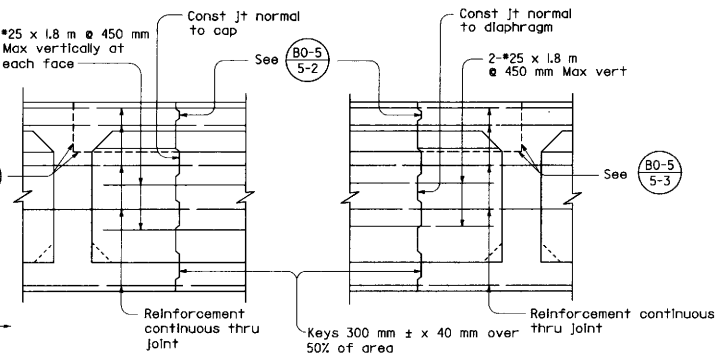

BENT CAP

DIAPHRAGMS

LONGITUDINAL CONSTRUCTION JOINTS

DETAIL J-4

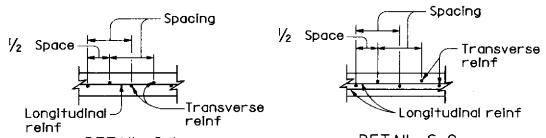

DETAIL S-1

DETAIL S-2

BOTTOM SLAB TRANSVERSE REINFORCEMENT SPACING DIAGRAMS

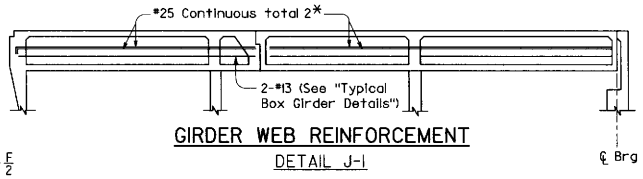

GIRDER WEB REINFORCEMENT

DETAIL J-1

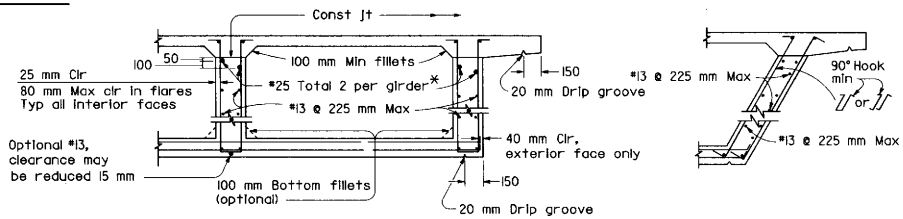

See B0-5 5-5 for alternative stirrups. See B8-5 for prestressed girder details.

TYPICAL BOX GIRDER DETAILS

DETAIL B-1

*At all web constuction joints

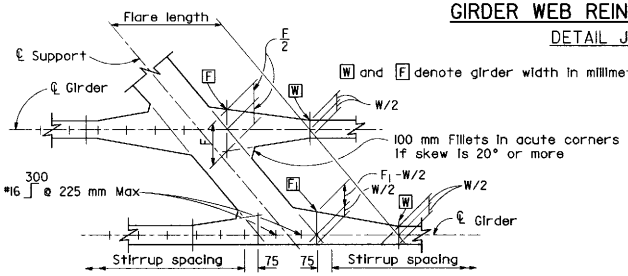

TYPICAL GIRDER FLARE AND STIRRUP SPACING DIAGRAM

DETAIL S-3

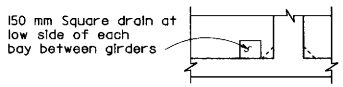

VIEW B-B

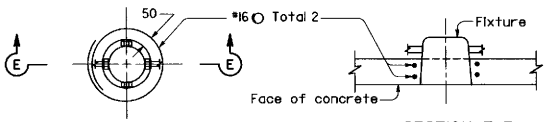

ADDED REINFORCEMENT

SECTION E-E

RECESSED SOFFIT LIGHT

DETAIL F-1

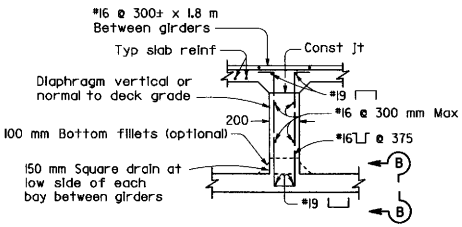

INTERMEDIATE DIAPHRAGM SECTION

DETAIL D-1

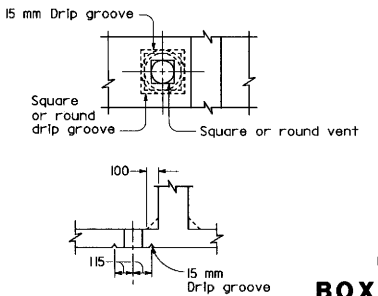

VENT

DETAIL V-1

NOTE

125 mm ϕ or ϕ vent in lower slab. Minimum of two vents per span in each bay between girders. One vent to be located at low point of span and other vent to be located at opposite end of span @ 450 mm from face of abutment or bent.

STATE OF CALIFORNIA
DEPARTMENT OF TRANSPORTATION

BOX GIRDER DETAILS

NO SCALE

ALL DIMENSIONS ARE IN MILLIMETERS UNLESS OTHERWISE SHOWN

B7-1

STD. PLAN B7-1

Return to Table of Contents

DIST	COUNTY	ROUTE	KILOMETER POST TOTAL PROJECT	SHEET NO.	TOTAL SHEETS

REGISTERED CIVIL ENGINEER

July 1, 1997
PLANS APPROVAL DATE

REGISTERED PROFESSIONAL ENGINEER S.D. Wilman No. 35674 Exp. 9-30-99 CIVIL STATE OF CALIFORNIA

The State of California or its officers or agents shall not be responsible for the accuracy or completeness of electronic copies of this plan sheet.

California Metric

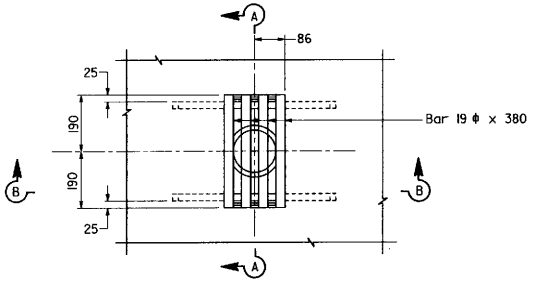

PLAN

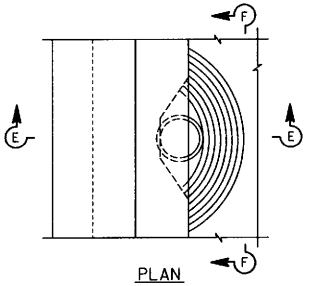

PLAN

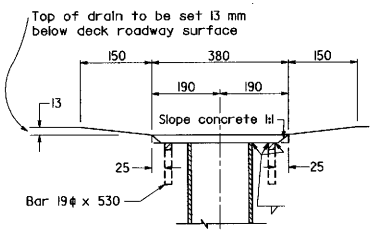

SECTION A-A

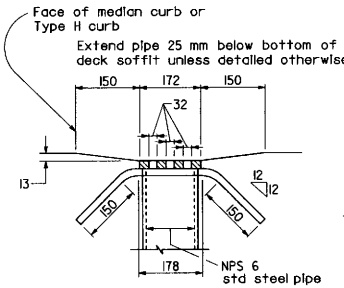

SECTION B-B

NOTE
Galvanize drain after fabrication.

DRAIN - TYPE "A" DETAIL 7-1

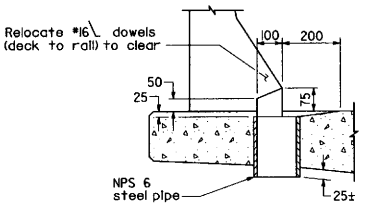

SECTION E-E

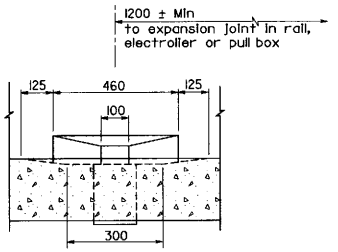

SECTION F-F

DRAIN - TYPE "B" DETAIL 7-3

For Type 25 barrier railing

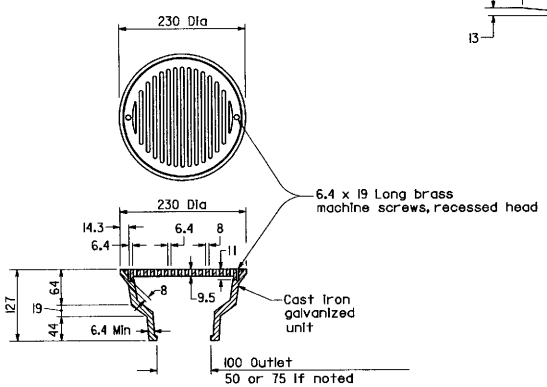

AREA DRAIN DETAIL 7-4

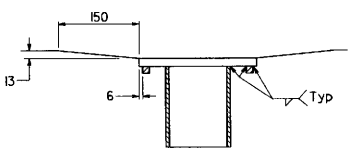

SECTION G-G

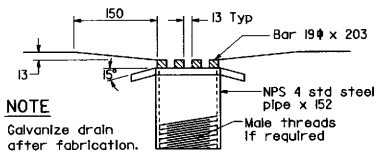

NOTE
Galvanize drain after fabrication.

SECTION H-H

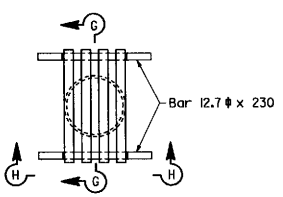

PLAN

PEDESTRIAN STRUCTURE DRAIN DETAIL 7-5

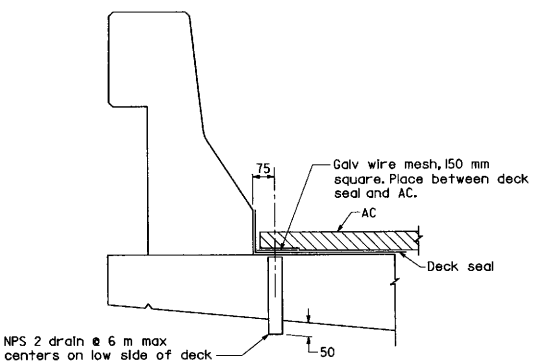

DECK BLEEDER DRAIN DETAIL 7-6

STATE OF CALIFORNIA
DEPARTMENT OF TRANSPORTATION

DECK DRAINS

NO SCALE

ALL DIMENSIONS ARE IN MILLIMETERS UNLESS OTHERWISE SHOWN

B7-5

STD. PLAN B7-5

Return to Table of Contents

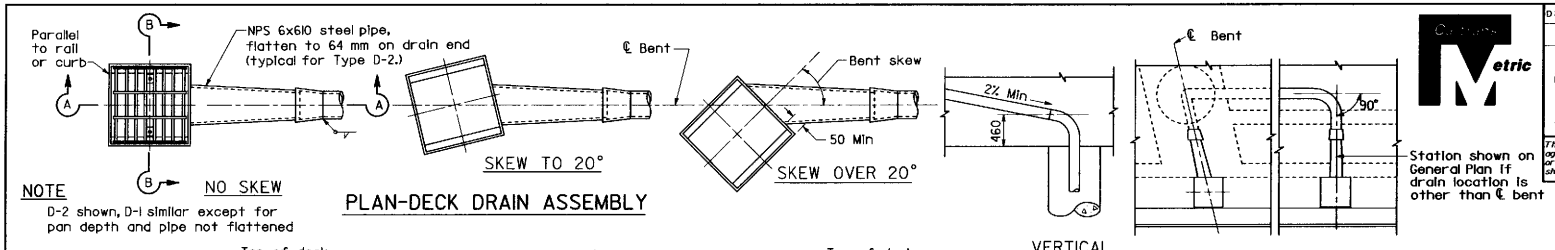

PLAN-DECK DRAIN ASSEMBLY

DRAIN PIPE ALIGNMENT

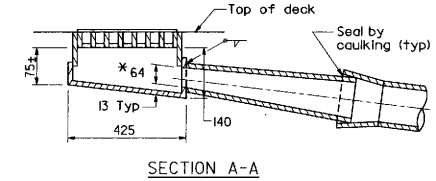

SECTION A-A

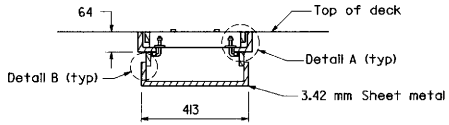

SECTION B-B

TYPE D-2 DETAIL 7-8

* 64 mm Flattened pipe opening to be maintained. Cut skirt of frame if it encroaches on the opening.

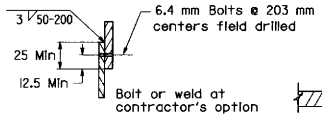

DETAIL B

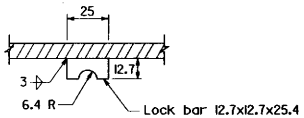

LOCK BAR

Apply adhesive sealant on pipe periphery to seal joint. Secure each end of sleeve to pipe with 3-M5-0.8Px12 mm self tapping hex head screws.

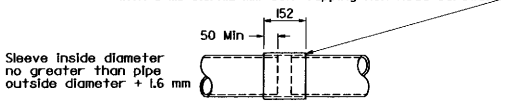

SLEEVE CONNECTION

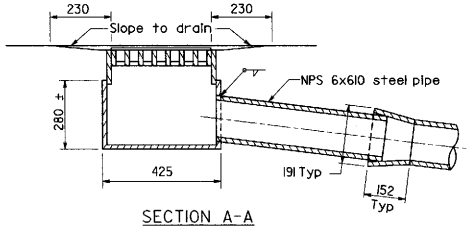

SECTION A-A

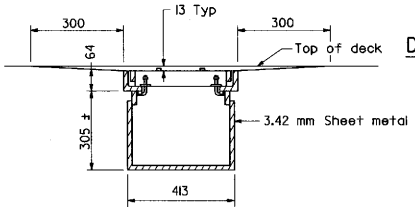

SECTION B-B

TYPE D-1 DETAIL 7-7

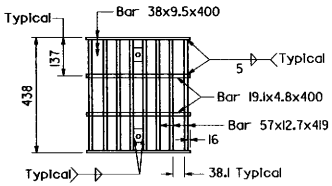

GRATE

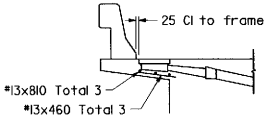

D-2 IN OVERHANG

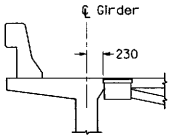

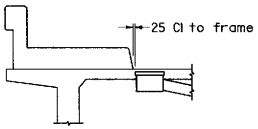

D-1 IN BAY

ELEVATION-DECK DRAIN LOCATIONS

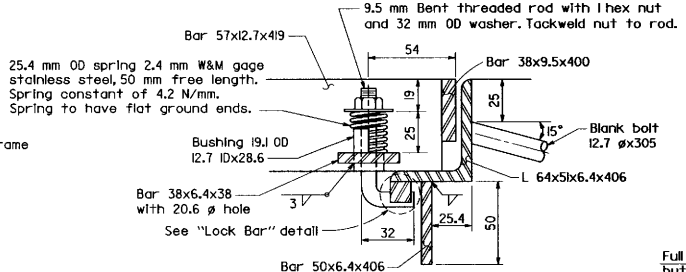

DETAIL A

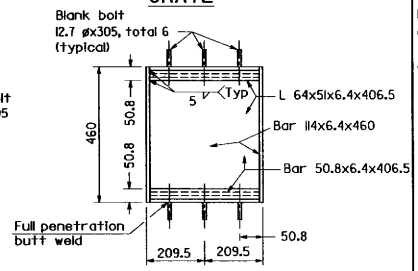

FRAME

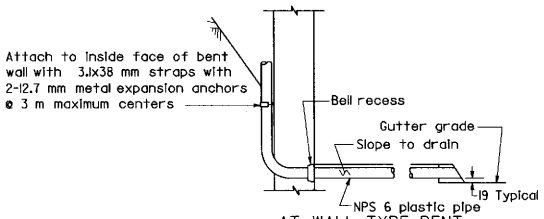

AT WALL TYPE BENT

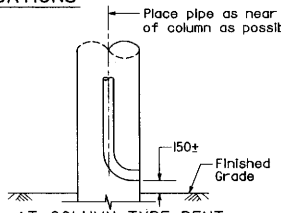

AT COLUMN TYPE BENT ABOVE GROUND

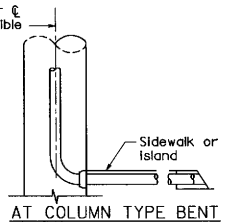

AT COLUMN TYPE BENT UNDER CURB

DRAIN OUTLET

NOTES

All pipe to be NPS 6x3.42 welded steel pipe except as noted and galvanize if not encased in concrete. Fittings and bends shall have a minimum wall thickness of 3.1 mm. All joints or connections to be butt welded or connected by a steel pipe sleeve and to be smooth throughout inside of pipe except as noted. All bends to be on 460 mm minimum radius measured along ℄ pipe. All bends to be smooth. Pipes not encased in concrete to be supported by suitable galvanize hangers ø3 m maximum spacing throughout. Galvanize deck drain assembly after fabrication.

DIST	COUNTY	ROUTE	KILOMETER POST TOTAL PROJECT	SHEET NO.	TOTAL SHEETS

REGISTERED CIVIL ENGINEER

July 1, 1997
PLANS APPROVAL DATE

REGISTERED PROFESSIONAL ENGINEER S. D. Wilman No. 35674 Exp. 9-30-99 CIVIL STATE OF CALIFORNIA

The State of California or its officers or agents shall not be responsible for the accuracy or completeness of electronic copies of this plan sheet.

STATE OF CALIFORNIA
DEPARTMENT OF TRANSPORTATION

DECK DRAINS TYPES D-1 AND D-2

NO SCALE

ALL DIMENSIONS ARE IN MILLIMETERS UNLESS OTHERWISE SHOWN

B7-6

STD. PLAN B7-6

Return to Table of Contents

DIST	COUNTY	ROUTE	KILOMETER POST TOTAL PROJECT	SHEET NO.	TOTAL SHEETS

R.A. Rogerson
REGISTERED CIVIL ENGINEER

July 1, 1997
PLANS APPROVAL DATE

The State of California or its officers or agents shall not be responsible for the accuracy or completeness of electronic copies of this plan sheet.

REGISTERED PROFESSIONAL ENGINEER
R.A. Rogerson
No. C25712
Exp. 12-31-97
CIVIL
STATE OF CALIFORNIA

Metric

ABUTMENT DIAPHRAGMS

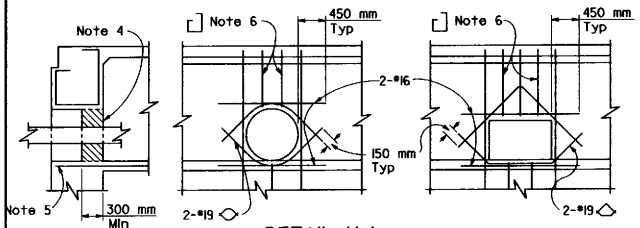

DETAIL U-1

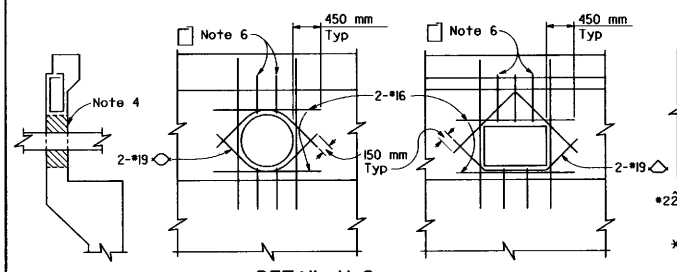

DETAIL U-2

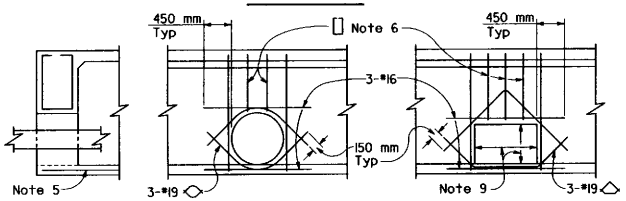

DETAIL U-3

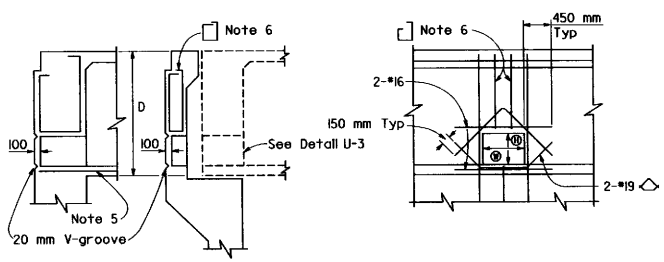

DETAIL U-4
(FOR FUTURE UTILITY OPENING)

INTERMEDIATE DIAPHRAGMS AND HINGES

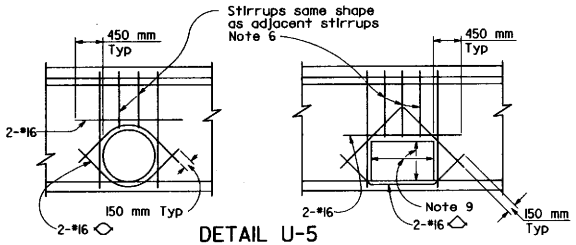

DETAIL U-5
AT INTERMEDIATE DIAPHRAGM

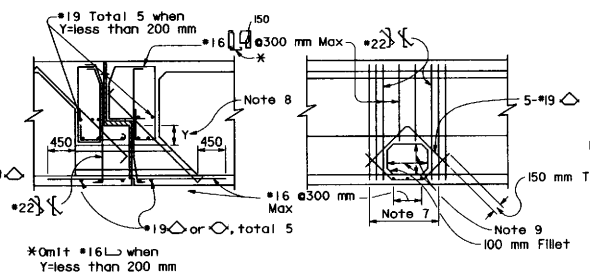

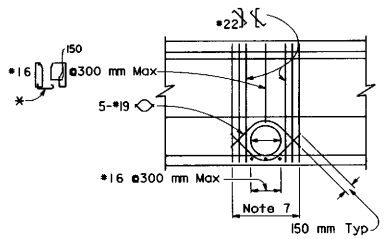

DETAIL U-6
AT HINGE

BENT CAPS

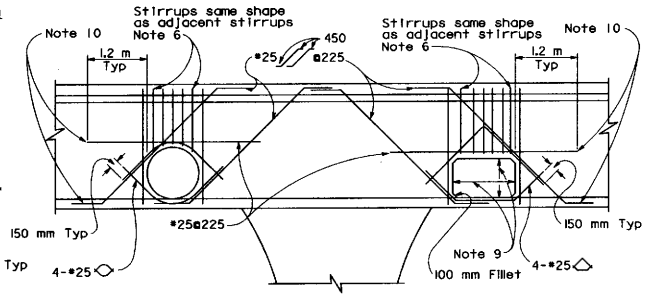

DETAIL U-7
NEAR OR BETWEEN COLUMNS

NOTES

1. The exact location, elevation, size and direction of openings shall be in accordance with the Project Plans and as directed by the Engineer.
2. Girders not shown. See Project Plans.
3. All reinforcement detailed to be placed in addition to reinforcement shown on Project Plans.
4. Seal utilities at abutments with concrete or mortar, after tightly wrapping utility with 2 layers of 7 kg building paper. If structure is prestressed, seal to be placed after stressing is completed.
5. Main reinforcement to clear opening.
6. Reinforcement to be same bar size and ⅔ the spacing of adjacent reinforcement shown on Project Plans.
7. Replace each set of 4-#25 bars cut off by opening. Place ½ on each side of opening.
8. When "Y" is less than 200 mm, extend top of opening to bottom of bearing seat elevation.
9. For future utility opening dimensions, see Project Plans and Detail U-4.
10. When there is insufficient space to place reinforcement as shown, hook reinforcement into exterior girder.

For future utility opening dimensions not shown on Project Plans use:

(H) = 1/3 D or 450 mm minimum, whichever is greater.
(W) = 1/3 D or 600 mm minimum, whichever is greater.

STATE OF CALIFORNIA
DEPARTMENT OF TRANSPORTATION

UTILITY OPENING BOX GIRDER

NO SCALE

ALL DIMENSIONS ARE IN MILLIMETERS UNLESS OTHERWISE SHOWN

B7-10

STD. PLAN B7-10

Return to Table of Contents

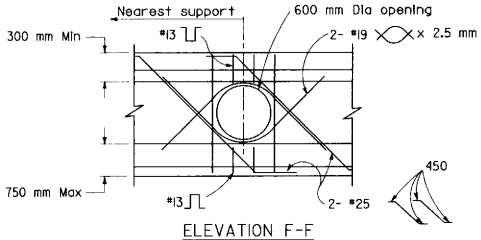

ELEVATION F-F

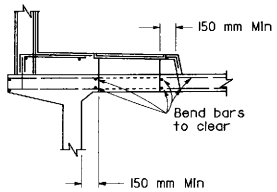

SECTION C-C

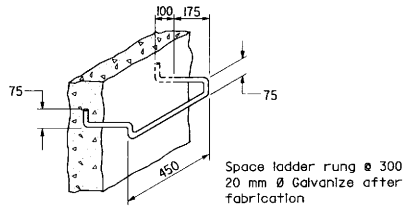

BAR STEP

LADDER RUNG DETAILS

DETAIL U44

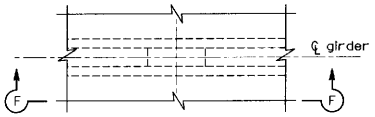

PART PLAN

GIRDER STEM ACCESS OPENING

DETAIL U41

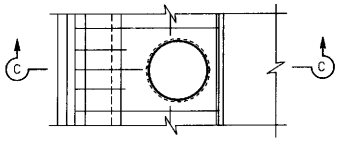

PART PLAN

SIDEWALK ACCESS OPENING

DETAIL U42

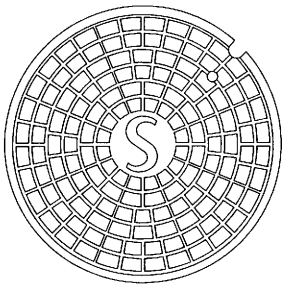

TOP OF MANHOLE COVER

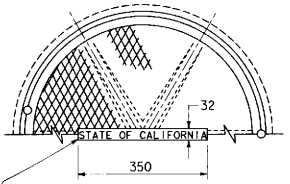

Letters 25 mm high. No other inscription to appear on exposed surfaces.

TOP OF MANHOLE FRAME & COVER

NOTES

1. For exact location of openings see other sheets.
2. Location and size of manholes may be modified as directed by the Engineer, provided minimum dimensions are maintained.
3. All reinforcement detailed to be placed in addition to reinforcement shown on other sheets.

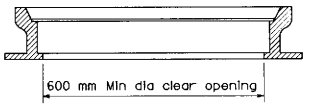

SECTION THROUGH FRAME

NON-ROCKING MANHOLE FRAME & COVER FOR DECKS

DETAIL U45

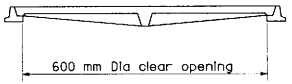

SECTION THROUGH FRAME & COVER

MANHOLE FRAME & COVER FOR SIDEWALKS

DETAIL U46

NOTES

1. The manhole frame and cover shall be made of gray cast iron. Mass for payment is 200 kg.
2. All parts of the manhole frame and cover expect machined surfaces shall be coated with asphaltum paint.
3. The manhole frame and cover shall be tested for accuracy of fit and shall be marked in sets before delivery. The cover shall fit the frame snugly but not tightly.
4. Covers for use on sewer structures shall bear the letters "S"; on storm drain structures the letter "D"; on openings for utilities the letter "U".
5. The mass shall not vary more than ten percent from the mass for payment.
6. Step inserts may be substituted for the standard step detail. Step inserts shall comply with State Industrial Safety requirements.

NOTE

Frame and cover shall be cast iron. mass for payment is 110 kg.

Galvanize complete assembly after fabrication.

The mass shall not vary more than ten percent from the mass for payment.

Cover shall be supplied with bolt down or locking devices.

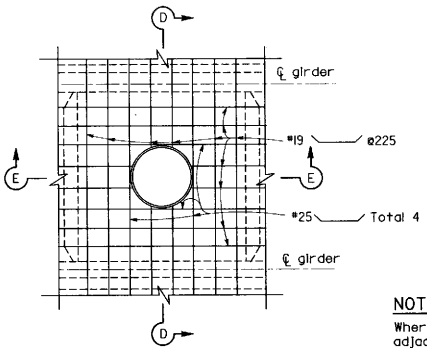

PART PLAN

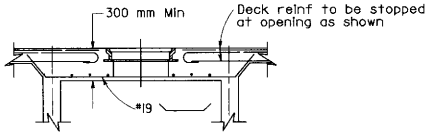

SECTION D-D

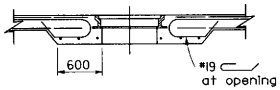

SECTION E-E

NOTE

Where manhole is located adjacent to a diaphragm or abut, substitute Half Section E-E on one side of Section E-E.

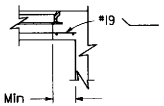

HALF SECTION E-E

DECK ACCESS OPENING

DETAIL U43

Caltrans Metric

DIST	COUNTY	ROUTE	KILOMETER POST TOTAL PROJECT	SHEET NO.	TOTAL SHEETS

R.A. Rogerson
REGISTERED CIVIL ENGINEER

July 1, 1997
PLANS APPROVAL DATE

R.A. Rogerson
No. C25712
Exp. 12-31-97
CIVIL
STATE OF CALIFORNIA
REGISTERED PROFESSIONAL ENGINEER

The State of California or its officers or agents shall not be responsible for the accuracy or completeness of electronic copies of this plan sheet.

STATE OF CALIFORNIA
DEPARTMENT OF TRANSPORTATION

UTILITY DETAILS

NO SCALE

ALL DIMENSIONS ARE IN MILLIMETERS UNLESS OTHERWISE SHOWN

B7-11

STD. PLAN B7-11

Return to Table of Contents

DIST	COUNTY	ROUTE	KILOMETER POST TOTAL PROJECT	SHEET NO.	TOTAL SHEETS

Caltrans Metric

F. H. Hoffman
REGISTERED CIVIL ENGINEER

July 1, 1997
PLANS APPROVAL DATE

REGISTERED PROFESSIONAL ENGINEER F.H. Hoffman No. 46401 Exp. 3-31-99 CIVIL STATE OF CALIFORNIA

The State of California or its officers or agents shall not be responsible for the accuracy or completeness of electronic copies of this plan sheet.

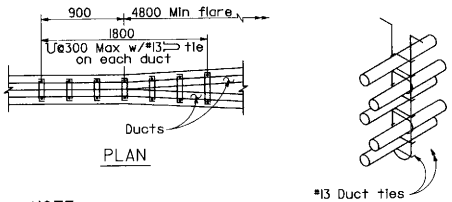

NOTE

Place closed end of duct ties in direction of flare.

STIRRUP REINFORCEMENT AT FLARE OF GIRDER STEM

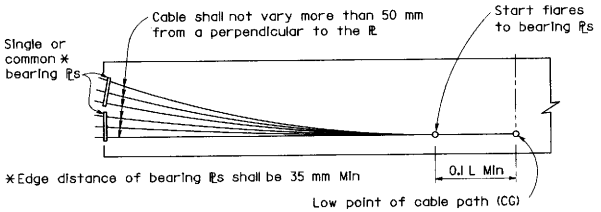

BEARING PLATE PRESTRESSING PATH

NOTES

Distribution of prestressing force:

Unless otherwise noted, the prestressing force shall be distributed with an approximately equal amount in each girder and shall be placed symmetrically about the center line of the structure. In slabs, the prestressing force shall be uniformly distributed across the slab.

Stressing sequence:

No more than ½ of the prestressing force in any girder may be applied before an equal force is applied in the adjacent girders. The maximum force variation between girders shall also not exceed the prestressing force of the largest tendon used in all girders. At no time during stressing operations will more than 1/6 of total prestressing force be applied eccentrically about the center line of the structure.

Girder stem may be flared near anchorage to provide clearances for the particular anchorage system.

Place duct ties, as shown for flare girder stem, at each location where ducts change horizontal direction.

Bar reinforcement interfering with the prestressing tendon alignment shall be adjusted, as approved by the Engineer.

The Contractor shall submit working drawings to the Engineer for approval. The working drawings shall include any additions or rearrangement of reinforcing steel from that shown on the plans. Sufficient points shall be shown on the working drawings to place ducts accurately.

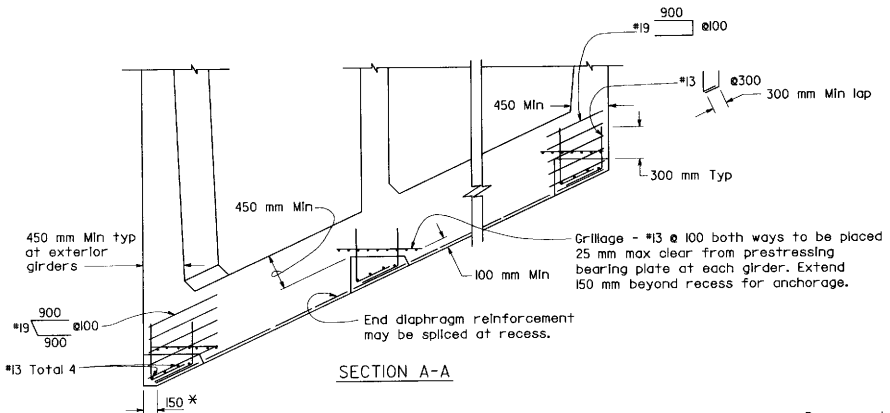

* Omit for skew < 20°

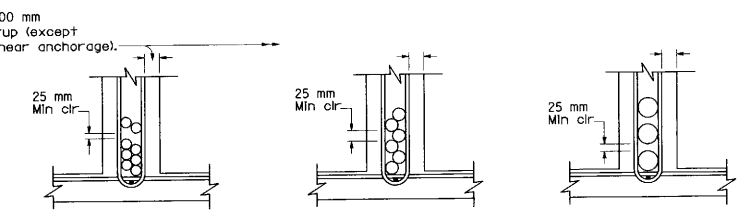

CLEARANCE REQUIREMENTS FOR DUCTS

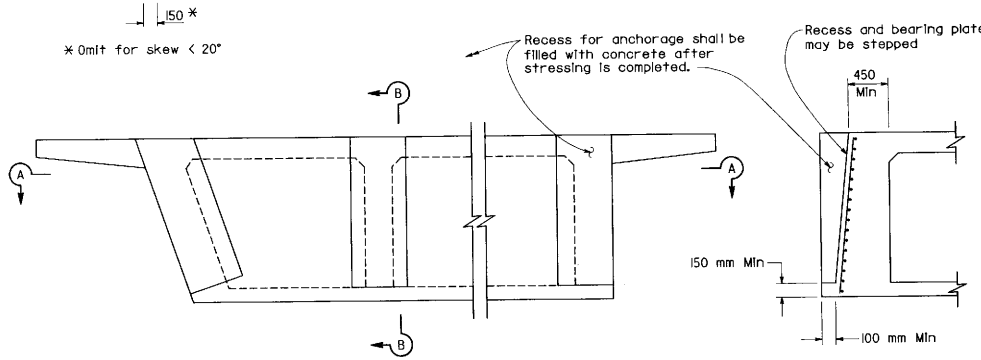

PRESTRESS ANCHORAGE DETAILS AT SEAT TYPE ABUTMENTS

NOTES

1. Duct patterns shown are for a 300 mm wide girder stem. For other widths the minimum clearances must be maintained.
2. Girder stirrups must be bent to fit the duct size used, or ⊥⊏ or ⊏⊐ stirrups may be used. A #16 minimum reinforcing bar must be placed inside of each stirrup hook or 90° bend.
3. For additional details see Standard Plan B7-1.
4. Approval of the Engineer is required for deviations.

STATE OF CALIFORNIA
DEPARTMENT OF TRANSPORTATION

CAST-IN-PLACE PRESTRESSED GIRDER DETAILS

NO SCALE

ALL DIMENSIONS ARE IN MILLIMETERS UNLESS OTHERWISE SHOWN

B8-5

STD. PLAN B8-5

Return to Table of Contents

DIST	COUNTY	ROUTE	KILOMETER POST TOTAL PROJECT	SHEET NO.	TOTAL SHEETS

Caltrans Metric

REGISTERED CIVIL ENGINEER

July 1, 1997
PLANS APPROVAL DATE

REGISTERED PROFESSIONAL ENGINEER R. C. Anderson No. 17180 Exp. 6-30-97 CIVIL STATE OF CALIFORNIA

The State of California or its officers or agents shall not be responsible for the accuracy or completeness of electronic copies of this plan sheet.

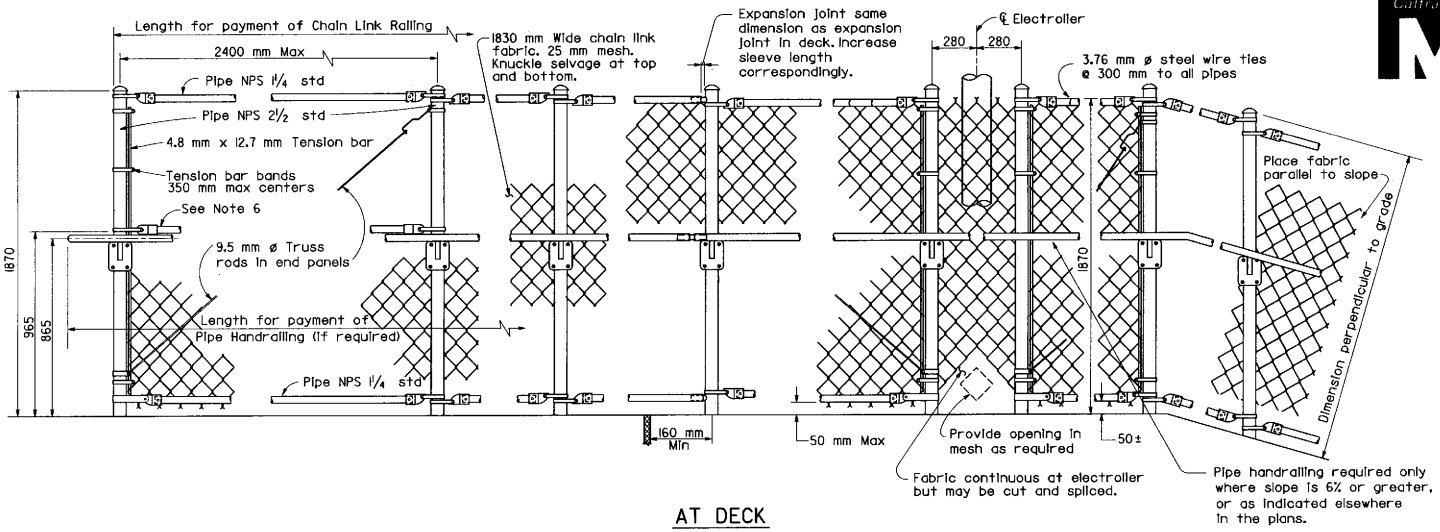

END POST

INTERMEDIATE POSTS

AT DECK EXPANSION JOINTS

AT ELECTROLIER

ON SLOPES

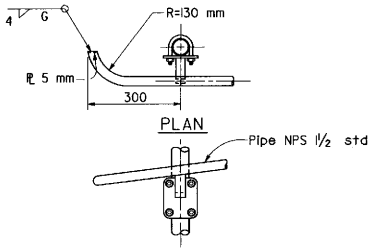

PIPE HANDRAILING AT END

ALTERNATIVE DETAILS

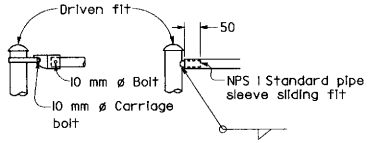

TYPICAL CONNECTION DETAILS

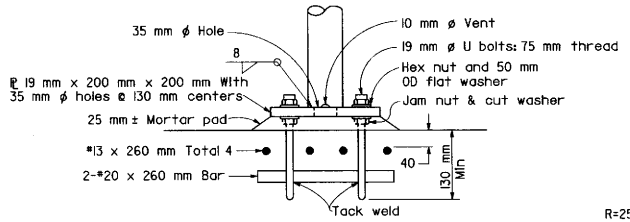

ANCHORAGE DETAIL

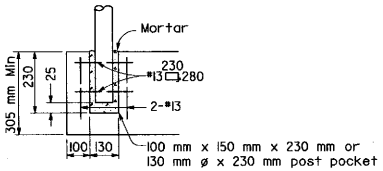

ALTERNATIVE ANCHORAGE DETAIL

May be used when thickness of concrete is 305 mm or more.

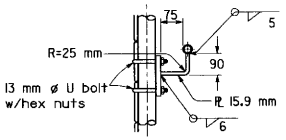

SIDE VIEW

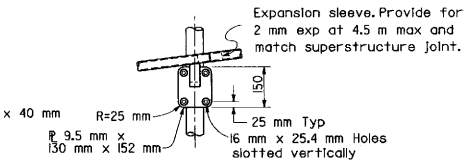

ELEVATION

PIPE HANDRAILING BRACKET

NOTES

1. Railing assembly except chain link fabric to be galvanized after fabrication.
2. Peen all bolt threads.
3. Railing shall conform to horizontal and vertical alignment. Posts shall be vertical. Top and bottom pipes shall be bent if radius is 45.0 m or less; may be on 2.4 m chords if radius is over 45.0 m.
4. When railing is on slope, 1830 mm chain link fabric shall be placed parallel to slope.
5. Alternative details may be submitted by Contractor for Engineer's approval.
6. Additional pipe NPS 1¼ standard required when radius is less than 45.0 m.

STATE OF CALIFORNIA
DEPARTMENT OF TRANSPORTATION

CHAIN LINK RAILING

NO SCALE

ALL DIMENSIONS ARE IN MILLIMETERS UNLESS OTHERWISE SHOWN

B11-7

STD. PLAN B11-7

Return to Table of Contents

DIST	COUNTY	ROUTE	KILOMETER POST TOTAL PROJECT	SHEET NO.	TOTAL SHEETS

Metric

REGISTERED CIVIL ENGINEER

July 1, 1997
PLANS APPROVAL DATE

R. C. Anderson
No. 17180
EXP. 6-30-97
CIVIL
REGISTERED PROFESSIONAL ENGINEER
STATE OF CALIFORNIA

The State of California or its officers or agents shall not be responsible for the accuracy or completeness of electronic copies of this plan sheet.

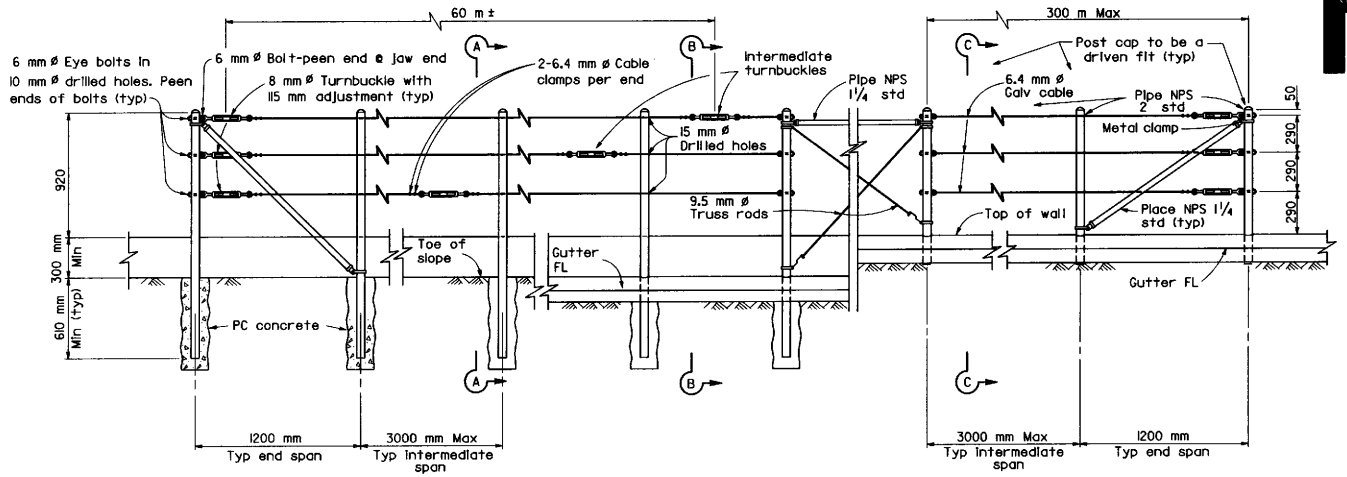

EXISTING WALL (WITHOUT GUTTER)
Existing

RETAINING WALL (WITH GUTTER)
Existing

RETAINING WALL (WITH GUTTER)
New construction

ELEVATION

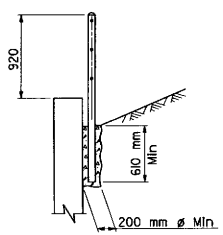

SECTION A-A
Existing

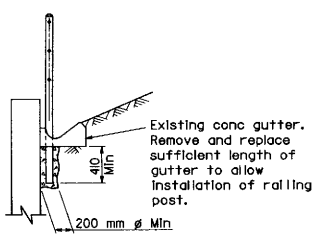

SECTION B-B
Existing

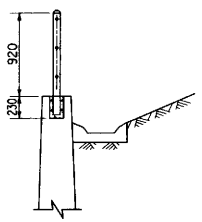

SECTION C-C
New construction

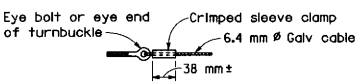

ALTERNATIVE CABLE CONNECTION

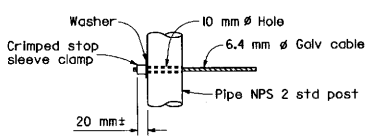

ALTERNATIVE DEAD END ANCHORAGE

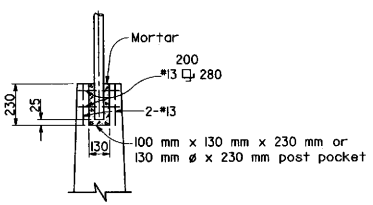

POST POCKET

NOTES

1. Maximum distance between turnbuckles shall be 60 m±.
2. Intermediate turnbuckles to be placed in adjacent spans.
3. Cable shall not be spliced between intermediate turnbuckles and end posts.
4. All posts, cable and hardware to be galvanized.
5. Posts to be vertical.
6. Alignment of holes in posts may vary to conform to slope of top of retaining wall.
7. The Contractor shall verify all dependent dimensions in the field before ordering or fabricating any material.
8. Alternative details may be submitted by the Contractor for approval by the Engineer.
9. Line posts shall be braced horizontally and trussed diagonally in both directions at intervals not to exceed 300 m.
10. Post pockets to be centered in top of wall.
11. Typical end spans, braced in both directions, shall be constructed at changes in line where the angle of deflection is 15° or more.
12. Provide thimbles at all cable loops.

STATE OF CALIFORNIA
DEPARTMENT OF TRANSPORTATION

CABLE RAILING

NO SCALE

ALL DIMENSIONS ARE IN MILLIMETERS UNLESS OTHERWISE SHOWN

B11-47

STD. PLAN B11-47

Return to Table of Contents

DIST	COUNTY	ROUTE	KILOMETER POST TOTAL PROJECT	SHEET NO.	TOTAL SHEETS

Caltrans Metric

REGISTERED CIVIL ENGINEER

July 1, 1997
PLANS APPROVAL DATE

REGISTERED PROFESSIONAL ENGINEER R. C. Anderson No. 17180 Exp. 6-30-97 CIVIL STATE OF CALIFORNIA

The State of California or its officers or agents shall not be responsible for the accuracy or completeness of electronic copies of this plan sheet.

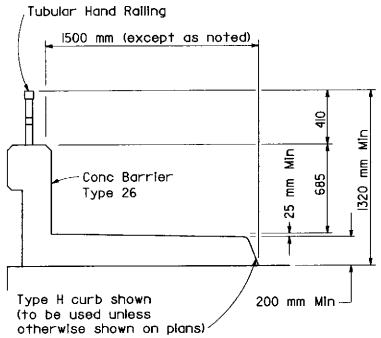

TYPICAL SECTION

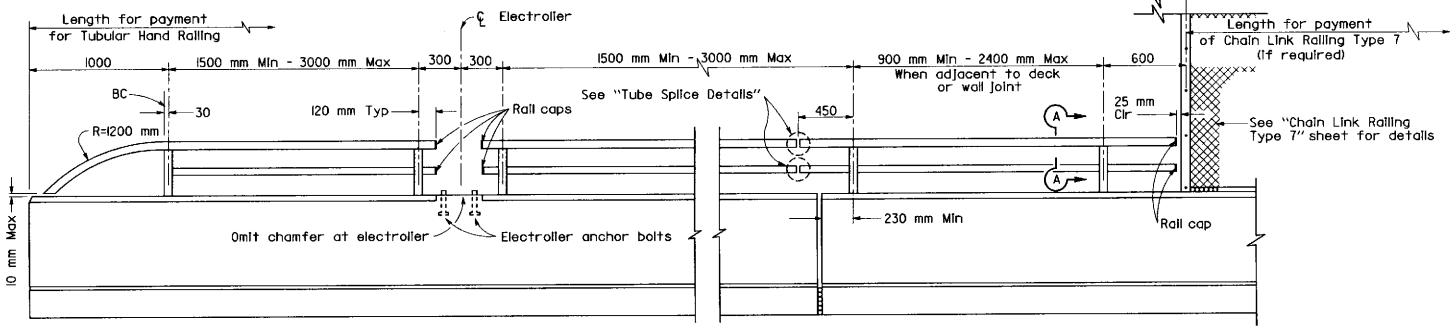

END POST

ELECTROLIER

DECK OR WALL JOINT

CHAIN LINK RAILING TYPE 7

ELEVATION

RAIL CAP
(TS 76 x 51 x 4.8 similar)

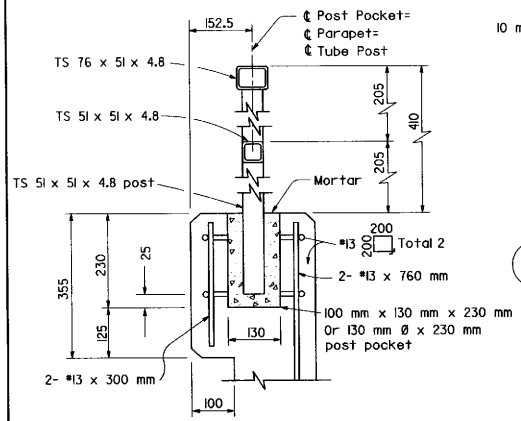

POST ANCHORAGE DETAILS

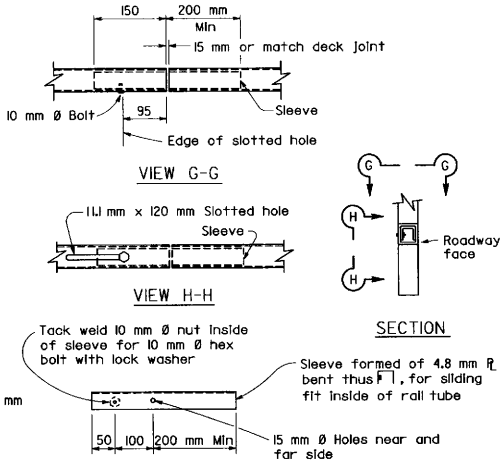

TUBE SPLICE DETAILS
(TS 76 x 51 x 4.8 similar)

NOTES

10 mm Ø Nut tack welded to sleeve may be replaced by drilled and tapped hole in sleeve.

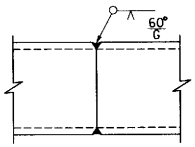

TUBE-WELDED SPLICE

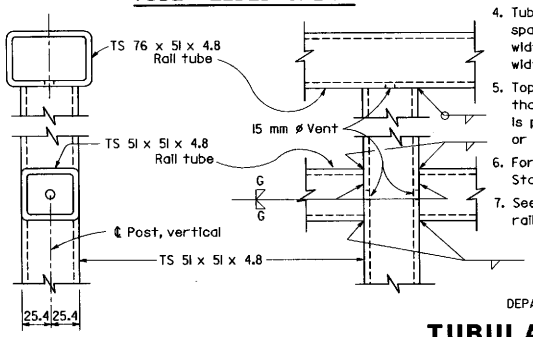

SECTION A-A

ELEVATION

RAIL CONNECTION DETAILS

NOTES

1. Galvanize rail assembly after fabrication.
2. Post shall be normal to railing.
3. Rail tubes shall be shop bent or fabricated to fit horizontal curve when radius is less than 300 m.
4. Tube splices shall be located in the tubes spanning deck or wall joints. Increase joint width in tubes to match expansion joint width and increase sleeve length correspondingly.
5. Top rail tube shall be continuous over not less than two posts except a short post spacing is permitted near deck or wall joints, electroliers, or other rail discontinuities as noted.
6. For details and reinforcement not shown see Standard Plan B1-54.
7. See project plans for limits of tubular hand railing.

STATE OF CALIFORNIA
DEPARTMENT OF TRANSPORTATION

TUBULAR HAND RAILING

NO SCALE

ALL DIMENSIONS ARE IN MILLIMETERS UNLESS OTHERWISE SHOWN

B11-51

STD. PLAN B11-51

Return to Table of Contents

DIST	COUNTY	ROUTE	KILOMETER POST TOTAL PROJECT	SHEET NO.	TOTAL SHEETS

REGISTERED CIVIL ENGINEER

July 1, 1997
PLANS APPROVAL DATE

REGISTERED PROFESSIONAL ENGINEER R. C. Anderson No. 17180 Exp. 6-30-97 CIVIL STATE OF CALIFORNIA

The State of California or its officers or agents shall not be responsible for the accuracy or completeness of electronic copies of this plan sheet.

Caltrans Metric

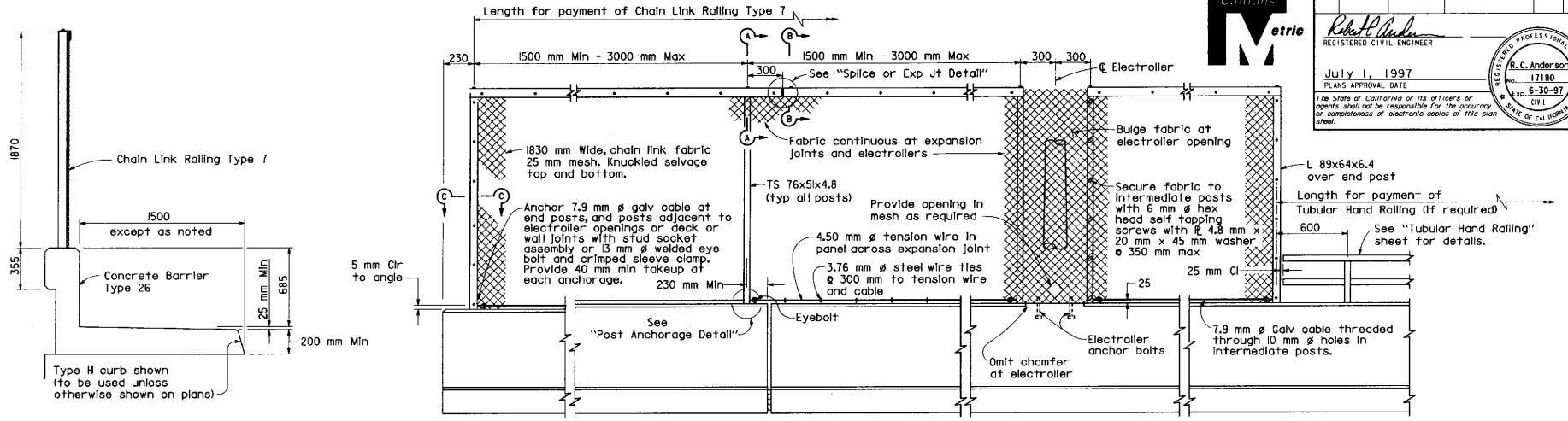

TYPICAL SECTION

ELEVATION

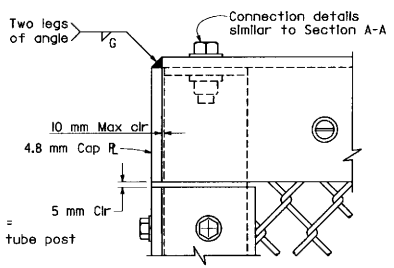

END POST ELEVATION

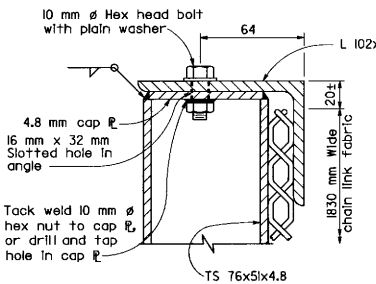

SECTION A-A

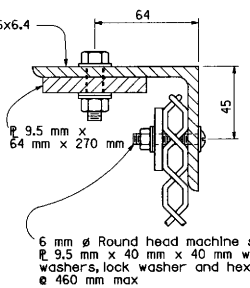

SECTION B-B

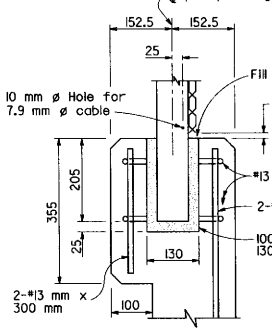

POST ANCHORAGE DETAIL

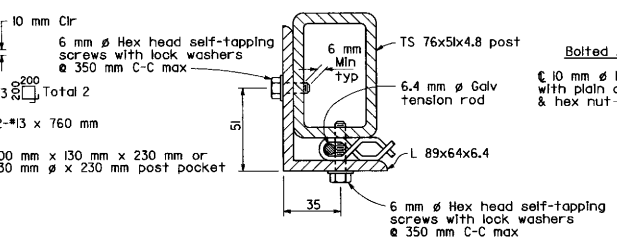

SECTION C-C

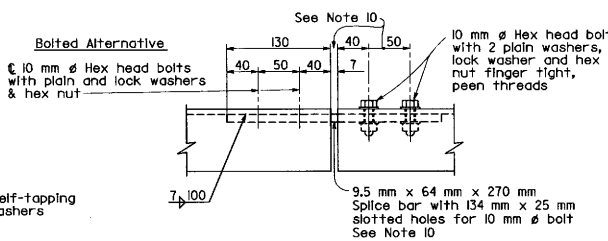

SPLICE OR EXPANSION JOINT DETAIL

NOTES

1. Railing assembly except chain link fabric to be galvanized after fabrication.
2. Posts shall be vertical.
3. Railing shall conform to horizontal and vertical alignment. When railing is placed on a curved horizontal alignment with radius of 45 m or less, thread the 7.9 mm ø cable though 10 mm ø welded eye rods embedded 100 mm into the top of the concrete parapet and equally spaced to limit the midordinate distance between the 7.9 mm ø cable and the curve to 25 mm maximum. Horizontal angle shall be bent to conform to horizontal alignment if radius is 45 m or less and may be on 3 m chords if radius is over 45 m.
4. Horizontal angle shall be continuous over not less than two intermediate posts, except that a shorter length is permitted at expansion joints, electrollers and other rail discontinuities.
5. When rail is on slope, place fabric parallel to slope.
6. Alternative details may be submitted by Contractor for Engineer's approval.
7. For details and reinforcement not shown see Standard Plan B11-54.
8. See Project Plans for limits of Chain Link Railing Type 7.
9. Provide thimbles at all cable loops.
10. Expansion joint same dimension as expansion joint in deck or wall. Increase slotted hole length and splice bar length correspondingly.

STATE OF CALIFORNIA
DEPARTMENT OF TRANSPORTATION

CHAIN LINK RAILING TYPE 7

NO SCALE

ALL DIMENSIONS ARE IN MILLIMETERS UNLESS OTHERWISE SHOWN

B11-52

STD. PLAN B11-52

Return to Table of Contents

DIST	COUNTY	ROUTE	KILOMETER POST TOTAL PROJECT	SHEET NO.	TOTAL SHEETS

Caltrans Metric

REGISTERED CIVIL ENGINEER

July 1, 1997
PLANS APPROVAL DATE

REGISTERED PROFESSIONAL ENGINEER R.C. Anderson No. 17180 Exp. 6-30-97 CIVIL STATE OF CALIFORNIA

The State of California or its officers or agents shall not be responsible for the accuracy or completeness of electronic copies of this plan sheet.

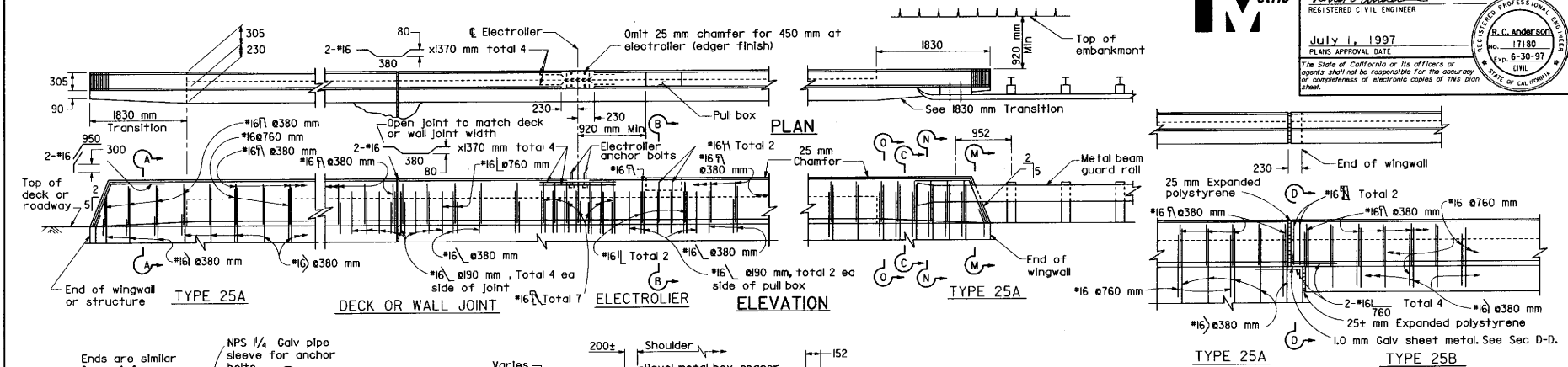

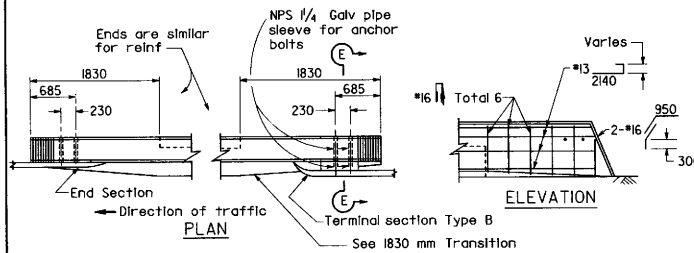

METAL BEAM GUARD RAIL CONNECTION

See Note F

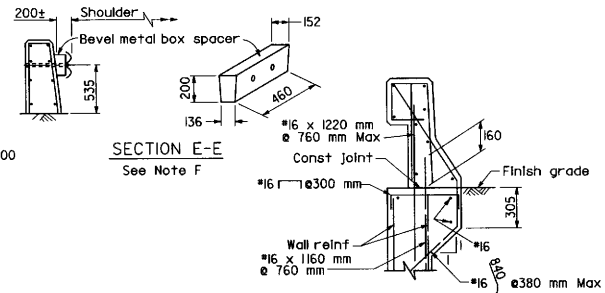

Type 25A and 25B details are similar to Type 25 except as noted.

NOTES

A. Walls are to be backfilled before barrier is placed.
B. Clearance to reinforcing steel in barrier to be 25 mm, except as noted. Longitudinal reinforcement to stop at all expansion joints.
C. See Project Plans for electrolier locations and pull box type.
D. For electrical details see Standard Plans ES-7A,7B,7C,7D and 7E.
E. Dimensions may vary with cross slope and with certain thicknesses of surfacing. See Project Plans.
F. For metal beam guard rail connection details not shown, see Standard Plan A77J.

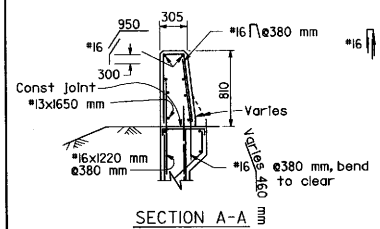

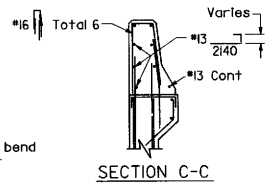

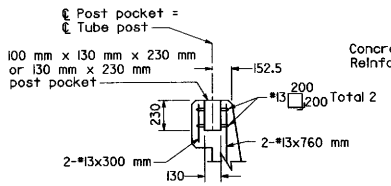

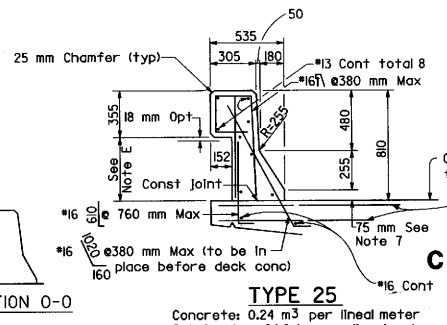

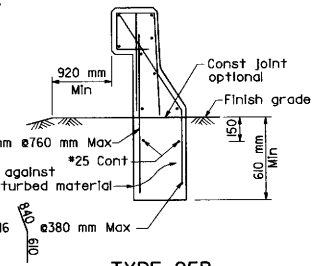

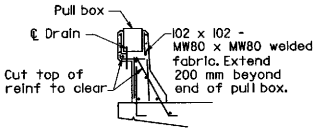

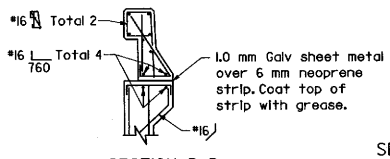

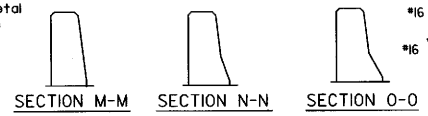

1830 mm TRANSITION

STATE OF CALIFORNIA
DEPARTMENT OF TRANSPORTATION

CONCRETE BARRIER TYPE 25

NO SCALE

ALL DIMENSIONS ARE IN MILLIMETERS UNLESS OTHERWISE SHOWN

B11-53

STD. PLAN B11-53

Return to Table of Contents

DIST	COUNTY	ROUTE	KILOMETER POST TOTAL PROJECT	SHEET NO.	TOTAL SHEETS

REGISTERED CIVIL ENGINEER

July 1, 1997
PLANS APPROVAL DATE

R. C. Anderson
No. 17180
Exp. 6-30-97
CIVIL
REGISTERED PROFESSIONAL ENGINEER
STATE OF CALIFORNIA

The State of California or its officers or agents shall not be responsible for the accuracy or completeness of electronic copies of this plan sheet.

Metric

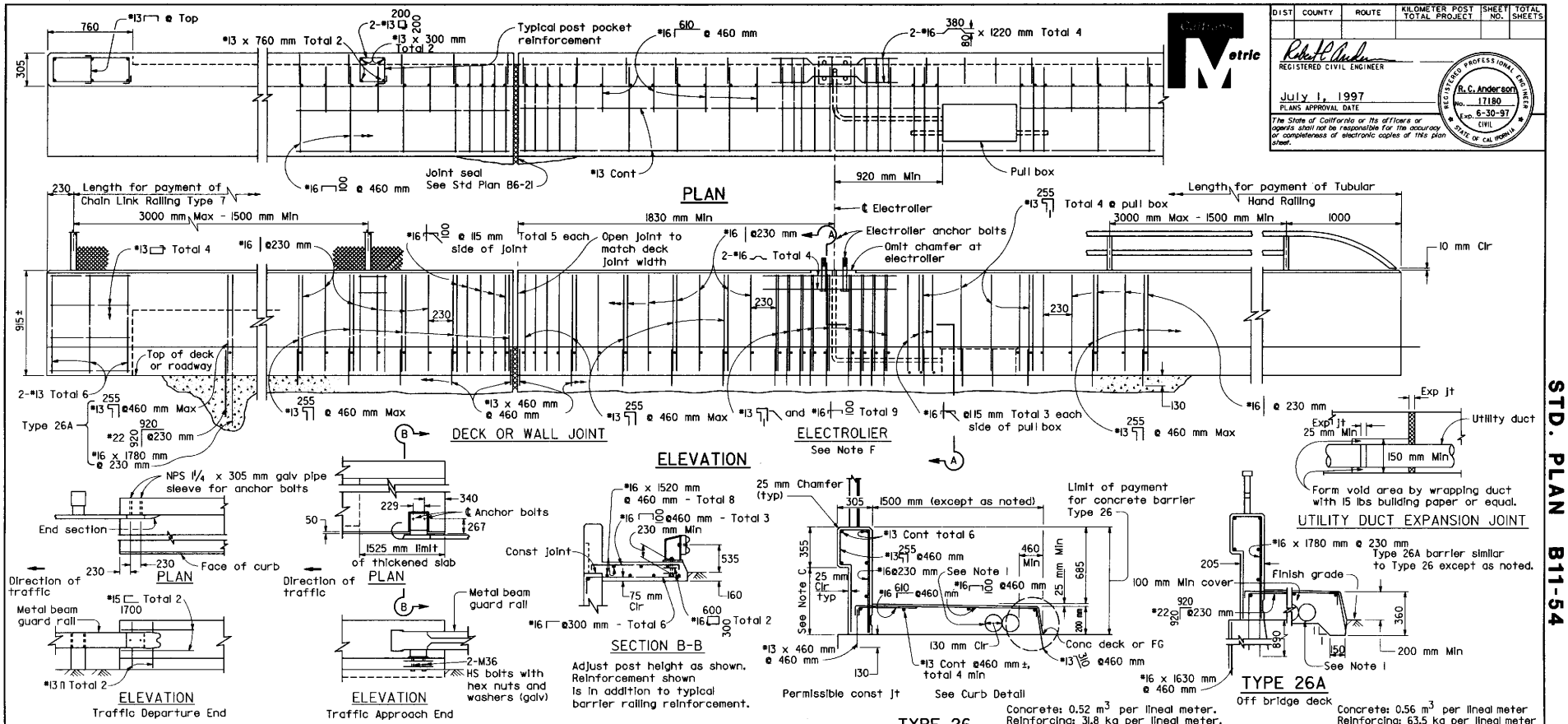

METAL BEAM GUARD RAIL CONNECTION

See Note J

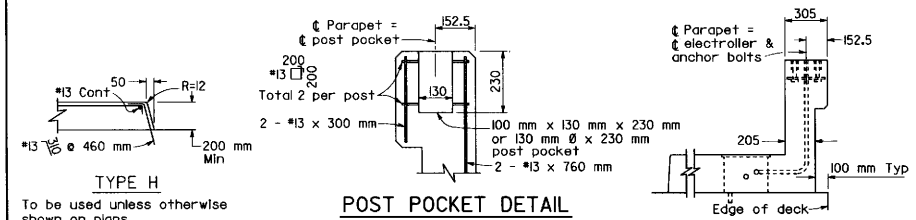

NOTES

A. For Chain Link Railing notes and details not shown, see Standard Plan B11-52.
B. For Hand Railing notes and details not shown, see Standard Plan B11-51.
C. Dimensions will vary with cross slope and with certain thicknesses of surfacing. See Project Plans.
D. Walls are to be backfilled before railing is placed.
E. Clearance to reinforcing steel in curb and railing to be 25 mm except as noted. Longitudinal reinforcement to stop at all expansion joints.
F. See Project Plans for electrolier locations and pull box type.
G. See Project Plans for limits of Chain Link Railing Type 7 and/or Tubular Hand Railing.
H. For electrical details, see Standard Plans ES-7A, 7B, 7C, 7D, and 7E.
I. A minimum of two - 130 mm round openings are required for future utilities in addition to those on other plan sheets. Openings are to be sealed at ends and extended 200 mm minimum past end of sidewalk if not used. Duct forms are to be tied down.
J. For Metal Beam Guard Rail Connection details not shown see Standard Plan A77K and A77J.

STATE OF CALIFORNIA
DEPARTMENT OF TRANSPORTATION

CONCRETE BARRIER TYPE 26

NO SCALE

ALL DIMENSIONS ARE IN MILLIMETERS UNLESS OTHERWISE SHOWN

B11-54

STD. PLAN B11-54

Return to Table of Contents

DIST	COUNTY	ROUTE	KILOMETER POST TOTAL PROJECT	SHEET NO.	TOTAL SHEETS

REGISTERED CIVIL ENGINEER

July 1, 1997
PLANS APPROVAL DATE

REGISTERED PROFESSIONAL ENGINEER Steve Na No. C35187 Exp. 9-30-99 CIVIL STATE OF CALIFORNIA

The State of California or its officers or agents shall not be responsible for the accuracy or completeness of electronic copies of this plan sheet.

Metric

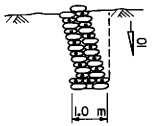

SECTION A-A

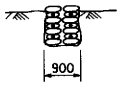

SECTION OF SCOUR CUTOFF STUBS

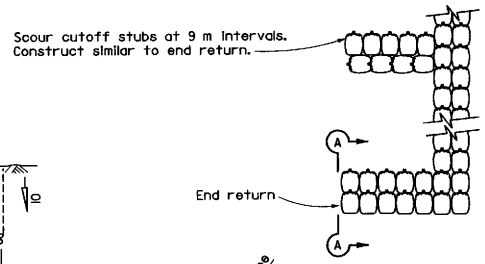

PLAN OF FIRST COURSE IN TRENCH

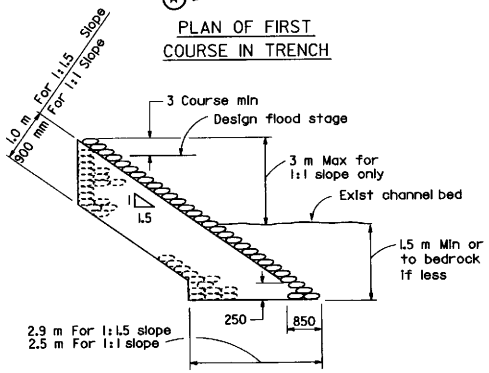

TYPICAL SECTION

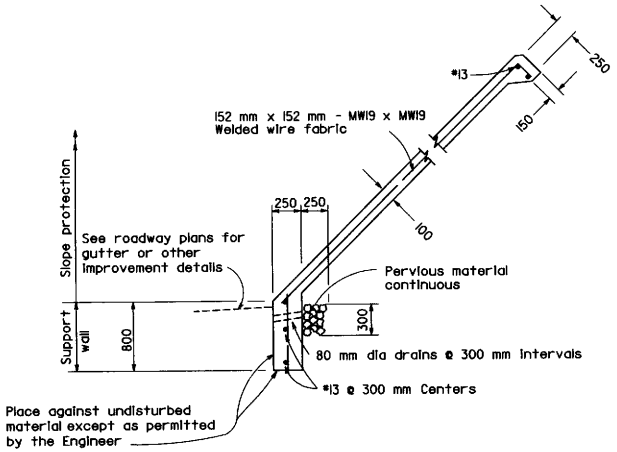

TYPICAL SECTION "C"

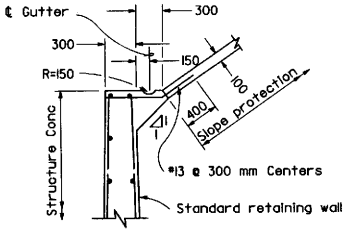

TYPICAL SECTION "D"

SACKED CONCRETE SLOPE PROTECTION ON SLOPES 1:1.5 AND 1:1

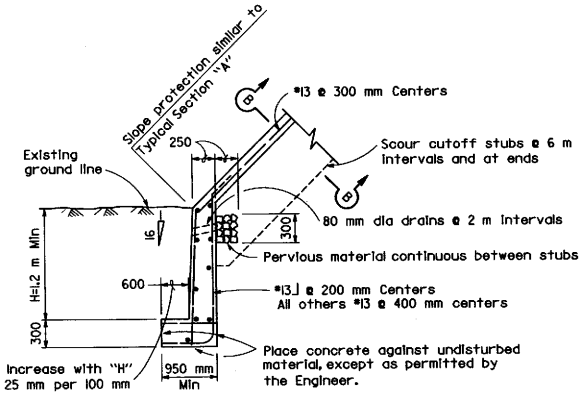

TYPICAL SECTION "B"

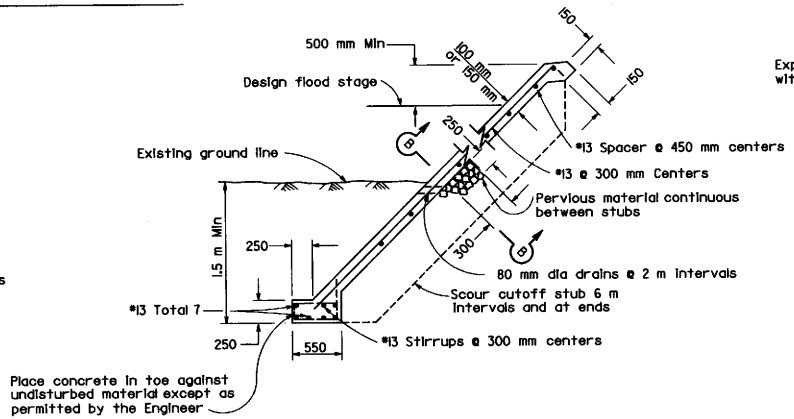

TYPICAL SECTION "A"

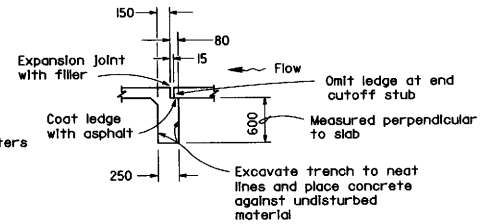

SECTION B-B

CONCRETE SLOPE PROTECTION

STATE OF CALIFORNIA
DEPARTMENT OF TRANSPORTATION

SLOPE PROTECTION DETAILS

NO SCALE

ALL DIMENSIONS ARE IN MILLIMETERS UNLESS OTHERWISE SHOWN

B13-1

STD. PLAN B13-1

Return to Table of Contents

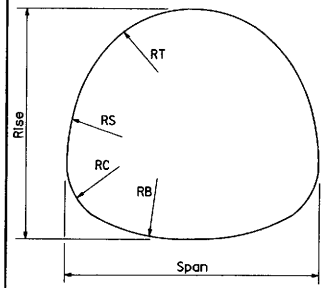

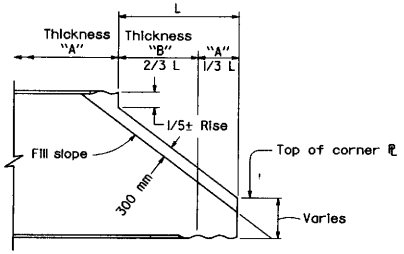

SIDE ELEVATION

NOTE

Thickness "B" two thicknesses greater than thickness "A", except for 6.5 mm and 7 mm thicknesses.

Skew-bevels not permitted with Alternative 1.

Cutoff dimensions are approximate only and may be varied by fabricator to suit plate layout.

ALTERNATIVE 1

MAXIMUM HEIGHT OF FILL (m)											LAYOUT DATA (mm)			
Span (mm)	Rise (mm)	Thickness (mm)												
		2.5	3.5	4.5	2.5	3.5	4.5	5.5	6.5	7.0				
		Soil Pressure 144 KPa			For soil pressures see Table A						RT	RS	RC	RB
3708	3353	4.9	4.9	4.9	5.2	7.9	10.0	14.0	16.5	18.0	1727	2362	965	3404
3937	3429	4.6	4.6	4.6	4.9	7.3	9.4	13.1	15.5	17.1	1854	2413	965	3658
4013	3632	4.3	4.3	4.3	4.9	7.3	9.4	12.8	15.2	16.8	1854	2616	965	4039
4216	3734	4.0	4.0	4.0	4.6	6.7	8.8	12.5	14.6	15.8	1956	2743	965	4166
4293	3912	4.0	4.0	4.0	4.6	6.7	8.8	12.2	14.3	15.5	1956	2921	965	4623
4420	4115	4.0	4.0	4.0	4.3	6.4	8.5	11.9	14.0	15.2	1981	3327	965	4420
4521	4267	4.0	4.0	4.0	4.3	6.4	8.2	11.6	13.7	14.9	2007	3454	965	4877
4724	4369	3.7	3.7	3.7	4.0	6.1	7.9	11.0	13.1	14.3	2134	3505	965	5105
4801	4597		3.7	3.7		6.1	7.9	10.7	12.8	14.0	2108	3810	965	5385
4978	4699		3.7	3.7		5.8	7.6	10.4	12.2	13.4	2184	3988	965	5461
5004	4902		3.4	3.4		5.8	7.6	10.4	12.2	13.4	2235	4013	965	6883
5105	4953		3.4	3.4		5.8	7.3	10.0	11.9	13.1	2261	4242	965	6274
5258	5182		4.3	4.3		5.5	7.0	9.8	11.6	12.8	2286	4420	1194	5461
5588	5156			4.0			6.7	9.1	11.0	11.9	2515	3988	1194	6325
5842	5232			4.0			6.4	8.8	10.7	11.6	2667	3962	1194	6706
5944	5359			3.7			6.4	8.8	10.4	11.3	2718	4013	1194	7544
6198	5436							8.5	10.0	11.0	2870	3962	1194	7976

Structures require strutting for fill heights below heavy lines. See Note A.

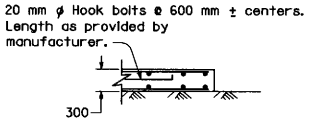

SECTION A-A

NOTE

Reinforce both faces of concrete collar with #13 @ 450 mm both ways. Maximum skew is 35°.

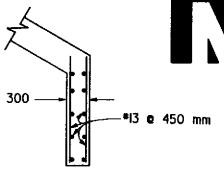

DETAIL B

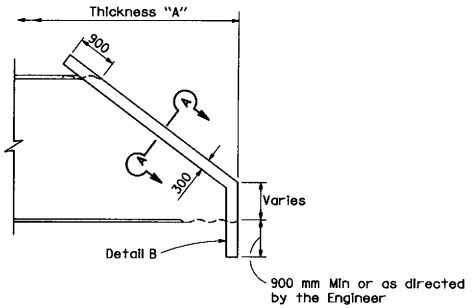

SIDE ELEVATION

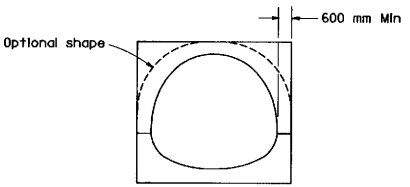

END ELEVATION

ALTERNATIVE 2

END BEVELS

TABLE A						
Spans (mm)	Soil Pressure kPa					
	Thickness (mm)					
	2.5	3.5	4.5	5.5	6.5	7.0
3708 to 5105	163	239	316	431	508	555
5258 to 6198	134	192	239	345	402	440

NOTES

A. For strutting requirements of structural steel plate vehicular undercrossing during construction, see Standard Plan D88A.

B. Minimum cover from crown to shoulder hinge point = 1.5 m.

C. Backfill shall be brought up uniformly on both sides of the structure.

D. Minimum cover for construction loading, see Standard Plan D88.

Reinforced concrete: F_S = 165 MPa
N = 10
F_C = 9 MPa

DIST	COUNTY	ROUTE	KILOMETER POST TOTAL PROJECT	SHEET NO.	TOTAL SHEETS

Caltrans Metric

Paul Cotter
REGISTERED CIVIL ENGINEER
July 1, 1997
PLANS APPROVAL DATE

REGISTERED PROFESSIONAL ENGINEER Paul Cotter No. 34509 Exp. 9-30-99 CIVIL STATE OF CALIFORNIA

The State of California or its officers or agents shall not be responsible for the accuracy or completeness of electronic copies of this plan sheet.

STATE OF CALIFORNIA
DEPARTMENT OF TRANSPORTATION

STRUCTURAL STEEL PLATE VEHICULAR UNDERCROSSING

NO SCALE

ALL DIMENSIONS ARE IN MILLIMETERS UNLESS OTHERWISE SHOWN

B14-1

STD. PLAN B14-1

Return to Table of Contents

DIST	COUNTY	ROUTE	KILOMETER POST TOTAL PROJECT	SHEET NO.	TOTAL SHEETS

Caltrans Metric

REGISTERED CIVIL ENGINEER

July 1, 1997
PLANS APPROVAL DATE

REGISTERED PROFESSIONAL ENGINEER J.S. Sandhu No. E11803 Exp. 9-30-00 ELECTRICAL STATE OF CALIFORNIA

The State of California or its officers or agents shall not be responsible for the accuracy or completeness of electronic copies of this plan sheet.

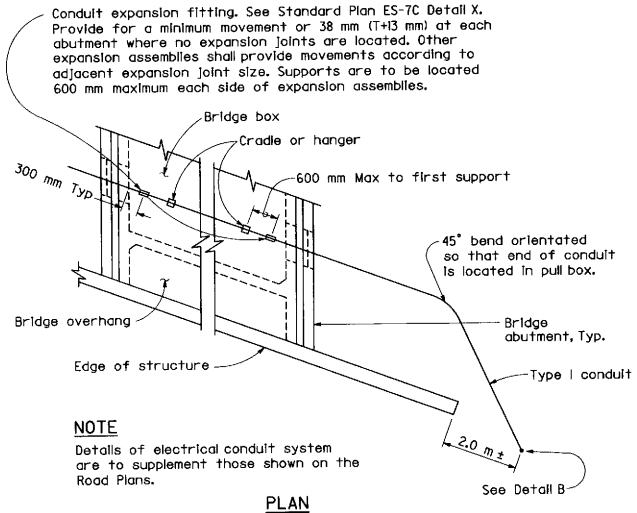

NOTE

Details of electrical conduit system are to supplement those shown on the Road Plans.

PLAN

COMMUNICATION OR SPRINKLER CONTROL CONDUITS

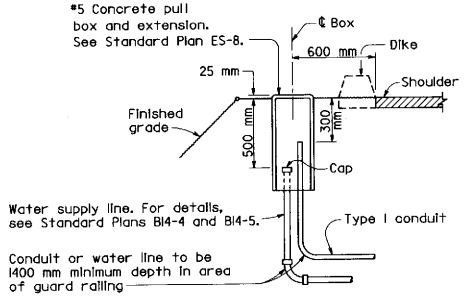

DETAIL B

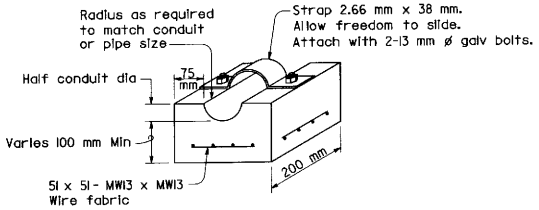

NOTES

1. Cradles to be precast concrete.
2. Secure all cradles to bottom slab of bridge with epoxy adhesive, except as provided below.

CONCRETE CRADLE

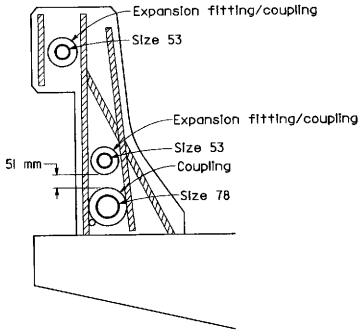

CONDUIT IN BRIDGE RAILING

Note:
Bridge railing can accommodate maximum of three conduits of the sizes shown above.

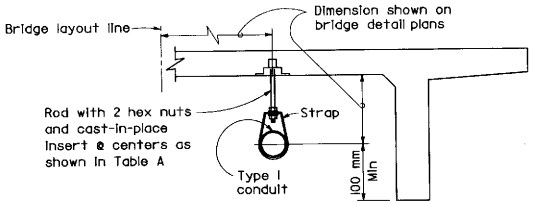

OTHER THAN BOX GIRDER

CONDUIT HANGER SUPPORT DETAILS

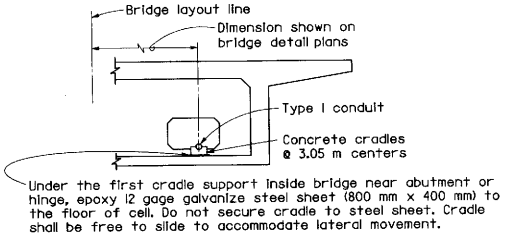

BOX GIRDER

CONDUIT SUPPORT DETAILS

TABLE A

Conduit	Size 63 or less	Size 78	Size 91
Rod	10 mm ø	13 mm ø	16 mm ø
Strap	2.28 mm x 25.4 mm	2.28 mm x 25.4 mm	2.66 mm x 38 mm
Support spacing	3.05 m	3.05 m	3.05 m

STATE OF CALIFORNIA
DEPARTMENT OF TRANSPORTATION

COMMUNICATION AND SPRINKLER CONTROL CONDUITS (CONDUIT LESS THAN SIZE 103)

NO SCALE

ALL DIMENSIONS ARE IN MILLIMETERS UNLESS OTHERWISE SHOWN

B14-3

STD. PLAN B14-3

Return to Table of Contents

DIST	COUNTY	ROUTE	KILOMETER POST TOTAL PROJECT	SHEET NO.	TOTAL SHEETS

REGISTERED CIVIL ENGINEER

July 1, 1997
PLANS APPROVAL DATE

REGISTERED PROFESSIONAL ENGINEER
Hao T. Phan
No. M20269
Exp. 9-30-00
MECHANICAL
STATE OF CALIFORNIA

The State of California or its officers or agents shall not be responsible for the accuracy or completeness of electronic copies of this plan sheet.

Metric

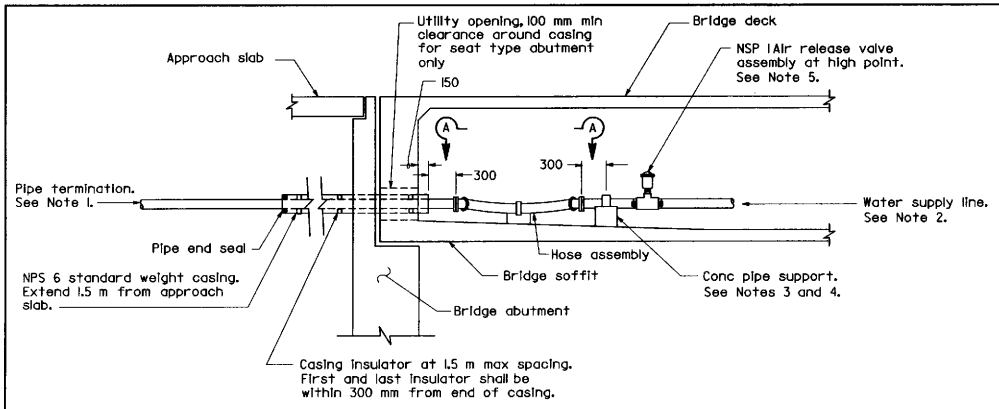

BOX GIRDER INSTALLATION

NUMBERED ITEM

1. 45 degree flanged elbow with insulated flange connection
2. Flanged hose fitting
3. Hose 2.0 m live length (size shall be same as pipe)

NOTES

1. Extend pipe 1.5 m+ beyond the edge of shoulder or as shown on bridge plans. Terminate in a pull box as shown on Standard Plan B14-3, Detail B.
2. Water supply line shall be installed parallel to to bridge soffit or deck.
3. For concrete pipe support, pipe shall be tightly clamped at the pipe support located halfway between hose assemblies. At all other supports, pipe clamp shall be shimmed with steel washer plate to provide 5 mm clearance between pipe and clamp.
4. Maximum spacing between pipe hangers or supports shall be 3.0 m unless otherwise detailed on the plans.
5. Install air release valve using threaded tee or pipe saddle.
6. Openings through diaphrams and bent caps shall be 150 mm diameter unless otherwise detailed on the plans.
7. For details of pipe hanger and concrete pipe support see Standard Plan B14-5.

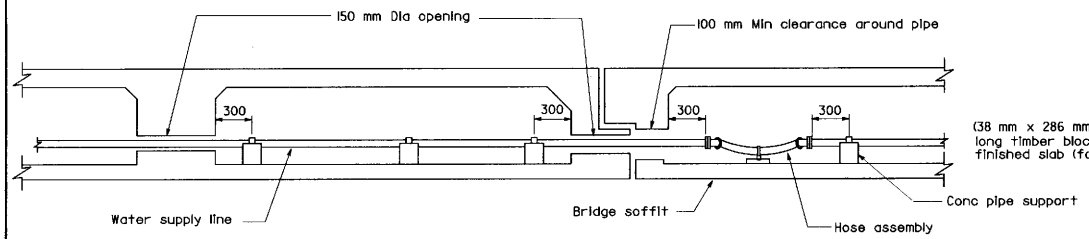

PIPE INSTALLATION AT HINGE

Same for hanger type installation

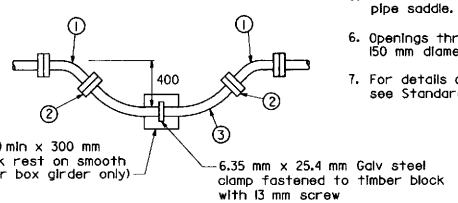

VIEW A-A

HOSE ASSEMBLY

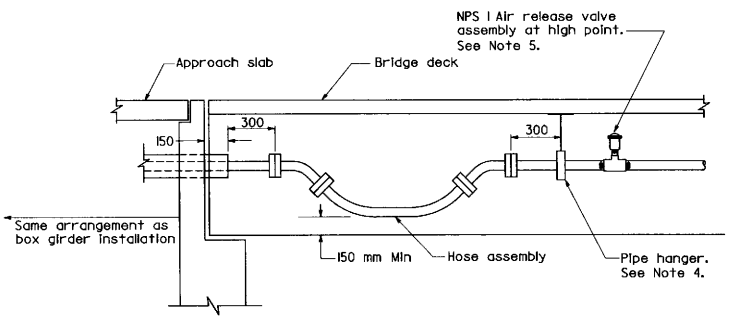

INSTALLATION FOR OTHER STRUCTURE TYPES

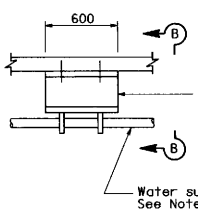

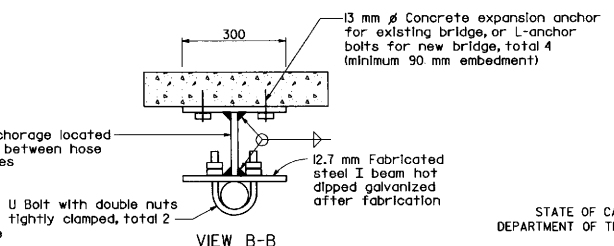

VIEW B-B

STATE OF CALIFORNIA
DEPARTMENT OF TRANSPORTATION

WATER SUPPLY LINE (BRIDGE) (PIPE SIZES LESS THAN NPS 4)

NO SCALE

ALL DIMENSIONS ARE IN MILLIMETERS UNLESS OTHERWISE SHOWN

B14-4

STD. PLAN B14-4

Return to Table of Contents

DIST	COUNTY	ROUTE	KILOMETER POST TOTAL PROJECT	SHEET NO.	TOTAL SHEETS

REGISTERED CIVIL ENGINEER

July 1, 1997
PLANS APPROVAL DATE

Hao T. Phan
No. M20269
Exp. 9-30-00
MECHANICAL
REGISTERED PROFESSIONAL ENGINEER
STATE OF CALIFORNIA

The State of California or its officers or agents shall not be responsible for the accuracy or completeness of electronic copies of this plan sheet.

Metric

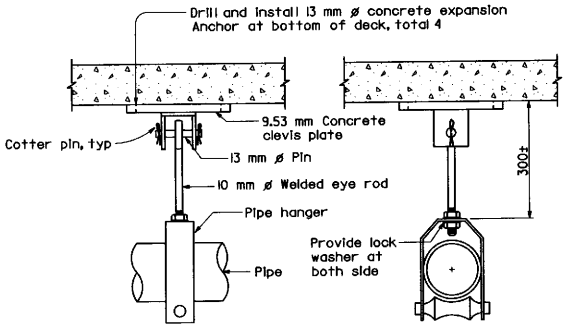

FRONT VIEW SIDE VIEW

FOR EXISTING BRIDGE

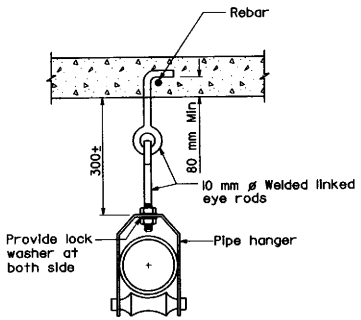

FOR NEW BRIDGE

PIPE HANGER

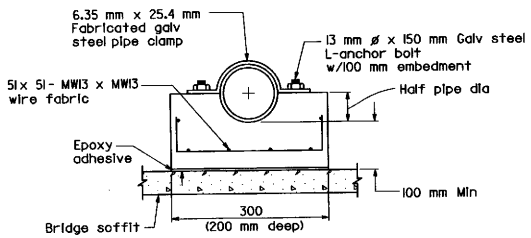

CONCRETE PIPE SUPPORT

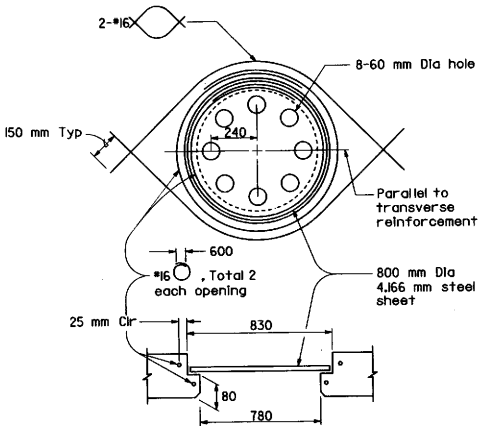

Locate where called for on bridge plans. Adjust reinforcement to clear opening. Plate must be installed before top deck is placed.

SOFFIT ACCESS OPENING

STATE OF CALIFORNIA
DEPARTMENT OF TRANSPORTATION

WATER SUPPLY LINE (DETAILS) (PIPE SIZES LESS THAN NPS 4)

NO SCALE

ALL DIMENSIONS ARE IN MILLIMETERS UNLESS OTHERWISE SHOWN

B14-5

STD. PLAN B14-5

Return to Table of Contents

DIST	COUNTY	ROUTE	KILOMETER POST TOTAL PROJECT	SHEET NO.	TOTAL SHEETS

REGISTERED CIVIL ENGINEER

July 1, 1997
PLANS APPROVAL DATE

REGISTERED PROFESSIONAL ENGINEER Gerry Mets No. C18915 Exp. 6-30-01 CIVIL STATE OF CALIFORNIA

The State of California or its officers or agents shall not be responsible for the accuracy or completeness of electronic copies of this plan sheet.

California Metric

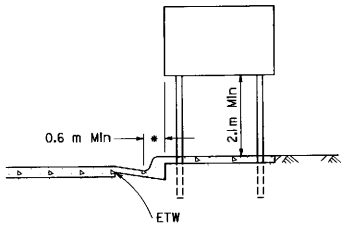

* 0.3 m Min where lateral clearance limited

URBAN LOCATIONS

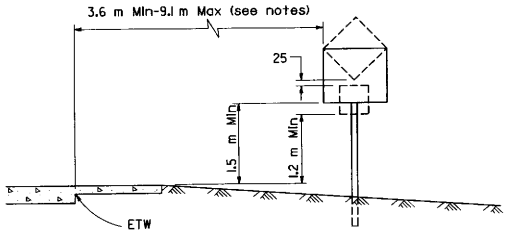

RURAL LOCATIONS

CONVENTIONAL HIGHWAYS AND INTERCHANGE AREAS

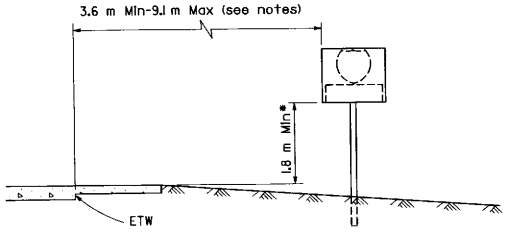

* 1.5 m Min at 9.1 m out

REGULATORY AND WARNING SIGNS AND ROUTE SHIELDS

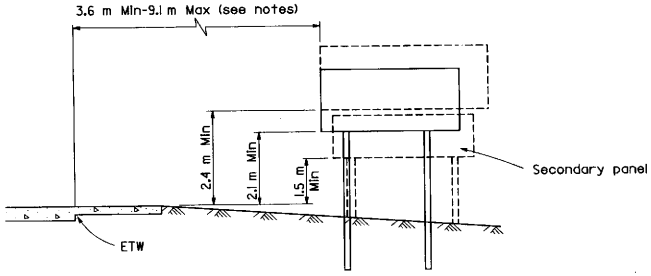

GUIDE SIGNS

FREEWAY AND EXPRESSWAY LOCATIONS

NOTES

When clear roadside recovery areas are provided, signs shall be placed as far from the edge of traveled way as possible, up to a maximum of 9.1 m. When possible they shall be placed in protected locations.

Signs in medians shall be placed at midpoint of median up to a maximum distance of 9.1 m from edge of traveled way. When appropriate, signs for opposing directions shall be placed back to back.

ETW = Edge of Traveled Way

STATE OF CALIFORNIA
DEPARTMENT OF TRANSPORTATION

ROADSIDE SIGN TYPICAL INSTALLATION DETAILS NO. 1

NO SCALE

ALL DIMENSIONS ARE IN MILLIMETERS UNLESS OTHERWISE SHOWN

RS1

STD. PLAN RS1

Return to Table of Contents

DIST	COUNTY	ROUTE	KILOMETER POST TOTAL PROJECT	SHEET NO.	TOTAL SHEETS

Metric

REGISTERED CIVIL ENGINEER

July 1, 1997
PLANS APPROVAL DATE

REGISTERED PROFESSIONAL ENGINEER Jeffrey B. Woody No. C41260 Exp. 3-31-99 CIVIL STATE OF CALIFORNIA

The State of California or its officers or agents shall not be responsible for the accuracy or completeness of electronic copies of this plan sheet.

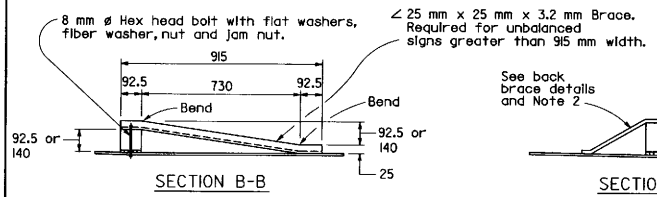

SECTION B-B

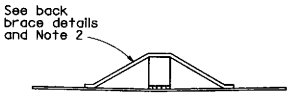

SECTION C-C

SECTION D-D

Wood block spacer -
19 mm x 89 mm x 150 mm for 610 mm - 882 mm width signs
38 mm x 89 mm x 150 mm for 940 mm - 1372 mm width signs
} 457 mm or more sign depth

No blocks required on signs less than 457 mm in depth. See Note 2.

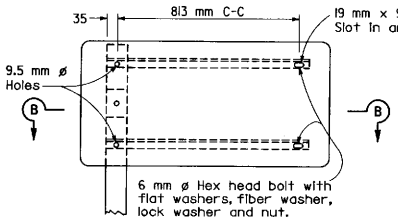

UNBALANCED

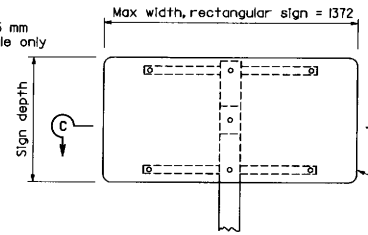

BALANCED

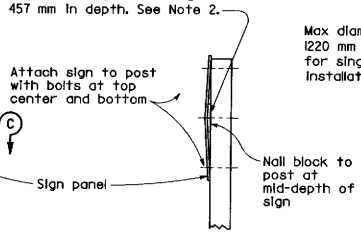

END VIEW

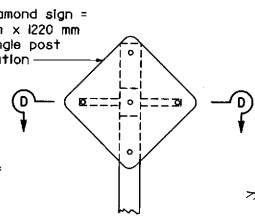

BALANCED

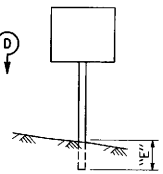

"E" Post Embedment

SINGLE POST INSTALLATION

See Note 5 regarding breakaway feature for single post installations.

POST EMBEDMENT	
POST SIZE (mm)	"E" (mm)
89x89	1100
89x140	1400
140x140	1550
140x184	1850

POST SPACING TABLE		
SIGN PANEL LENGTH	SIGN PANEL OVERHANG	POST SPACING
"A"	"B"	"C"
(m)	(mm)	(mm)
1.420 - 1.670	175 - 300	1070
1.830 & 1.980	300 & 375	1230
2.135 & 2.285	375 & 450	1385
2.440	450	1540
2.590	500	1590
2.740	550	1640
2.890	575	1740
2.540	610	1320
3.200	610	1980
3.350, 3.500, 3.660	610, 685, 765	2130
3.810	765	2280
3.960	765	2430
4.110, 4.420	765, 920	2580
4.270, 4.420	840, 915	2590
4.720, 4.870	915, 990	2890
5.030	990	3050
5.180, 5.330	990, 1065	3200
5.490, 5.640	1065, 1140	3360
5.790	1140	3510
5.940, 6.100	1140, 1220	3660
6.250, 6.400	1140, 1215	3970
6.550	1215	4120
6.700, 6.850	1215, 1290	4270
7.010	1290	4430
7.160, 7.310	1290, 1365	4580

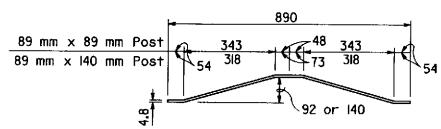

PLAN

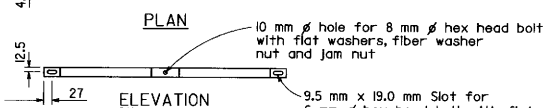

ELEVATION

BACK BRACE DETAILS

See Note 2

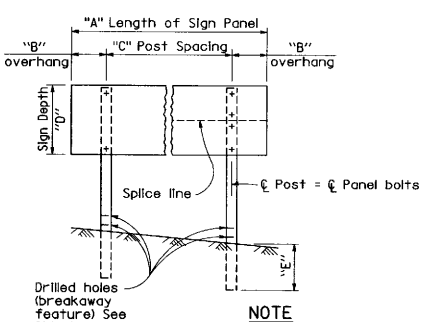

ELEVATION

NOTE

Bolt hole Layout is dependent on type of panel. Drill holes in post to match panel furnished.

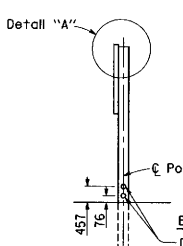

SIDE VIEW

BREAKAWAY FEATURE

Drill 76 mm holes in 140 mm x 184 mm post, 51 mm holes in 140 mm x 140 mm post, and 38 mm holes for 89 mm x 140 mm posts. Orient hole axis parallel to axis of sign. See Note 6 for tolerances of drilled holes.

TWO POST INSTALLATION

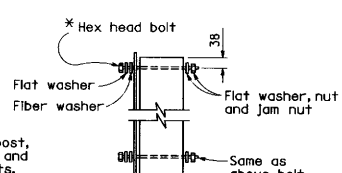

DETAIL A

*7.9 mm Diameter for single sheet aluminum panel signs.

9.5 mm Diameter for laminated panel signs or framed single sheet aluminum panel signs

NOTES

1. Place long dimension of post cross section normal to sign axis. See Section C-C.
2. Balanced single post installations of unframed single sheet aluminum panel signs shall have block spacers if 457 mm or more in depth and a combination of block spacers and back braces if 457 mm or more in depth and 864 mm or more in width. Sign panels less than 457 mm in depth and 864 mm or more in width shall have back braces only.
3. For post size see sign layout, format or quantity sheets.
4. Balanced single post installations of Laminated Panel and Framed single sheet panel signs require back braces when 864 mm or more in width.
5. Breakaway feature for single post installation shall be the same as the breakaway feature shown for the two post installation.
6. Tolerance for diameter of drilled holes in breakaway feature is ±3 mm.

STATE OF CALIFORNIA
DEPARTMENT OF TRANSPORTATION

ROADSIDE SIGNS-WOOD POST TYPICAL INSTALLATION DETAILS NO. 2

NO SCALE

ALL DIMENSIONS ARE IN MILLIMETERS UNLESS OTHERWISE SHOWN

RS2

STD. PLAN RS2

Return to Table of Contents

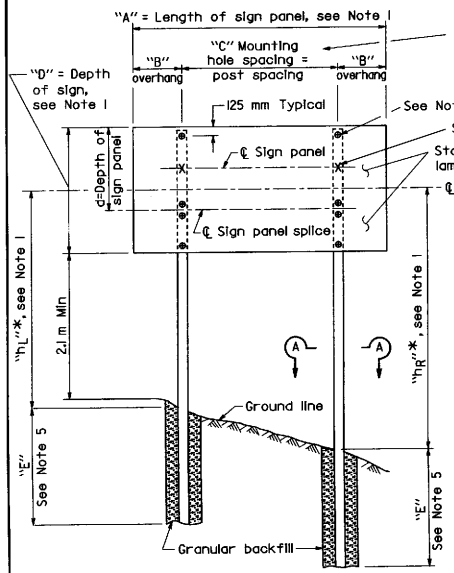

ELEVATION

* Dimensions shown on project plans are for fabrication. At time of installation adjust these dimensions to provide a level sign approximately 2.1 m above roadway shoulder.

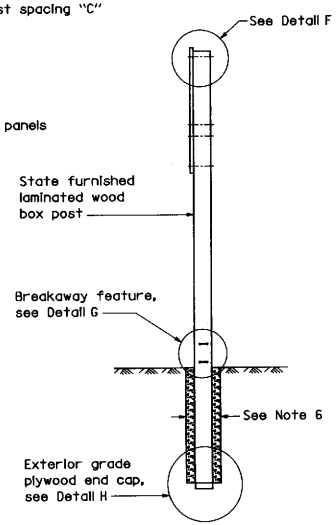

SIDE VIEW

SIGN PANEL LENGTH (m) (See Note 1)	SIGN PANEL OVERHANG (mm)	MOUNTING HOLE SPACING (m)
"A"	"B"	"C"
2.4	450	1.5
2.7	550	1.6
3.0	600	1.8
3.4	600	2.1
3.7	750	2.1
4.0	750	2.4
4.3	750	2.7
4.6	900	2.7
4.9	975	2.9
5.2	975	3.2
5.5	1050	3.4
5.8	1125	3.5
6.1	1200	3.6
6.4	1275	3.8
6.7	1275	4.1
7.0	1350	4.3
7.3	1425	4.4

TABLE 1

"hL" or "hR" (m)	TOTAL SIGN AREA (m²) 3.7 to 8.4	8.4+ to 13.0	13.0+ to 17.6	17.6+ to 22.3	22.3+ to 26.9
2.7 to 4.0	1.8	2.0	2.3	2.6	2.7
4.0+ to 5.2	1.8	2.1	2.4	2.7	3.0
5.2+ to 6.4	1.8	2.3	2.7	2.7	
6.4+ to 7.9	2.1	2.4	2.7		

TABLE 2

Minimum post embedment "E" for Type L post

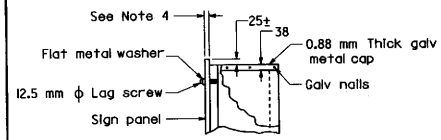

DETAIL F

GALV METAL CAP

State furnished

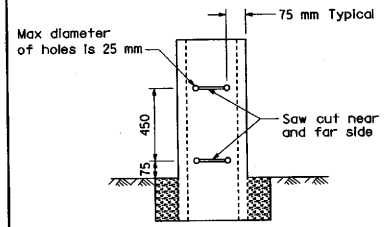

DETAIL G

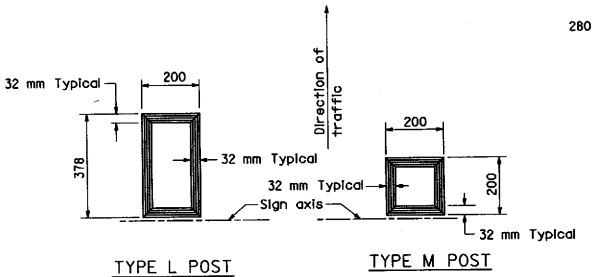

TYPE L POST

TYPE M POST

SECTION A-A

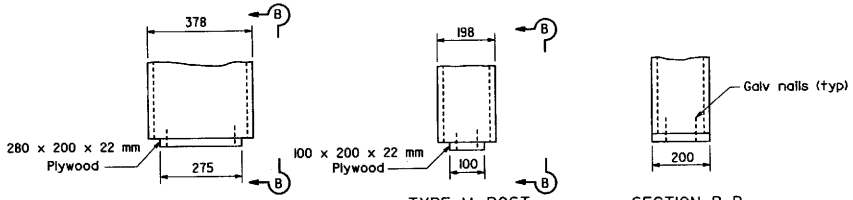

TYPE L POST

TYPE M POST

SECTION B-B

DETAIL H

NOTES

1. See Project Plans for:
   Location of each sign.
   Length of sign panel "A".
   Depth of sign "D".
   Height "hL" and "hR" of centerline of sign above ground line at each post.
   Type of post, L and M.
   See Standard Plans RS1 for other details.
2. "●" indicates location of 12.5 mm lag screws and existing holes in panels. Lag screws are to be embedded at least 25 mm into post using 7.8 mm diameter pilot holes.
3. "x" indicates location of additional 12.5 mm lag screws required when the depth of sign panel (d) and the length of sign panel (A) are as follows:

d	A
1500 mm	5.2 to 7.3 m
1350 mm	5.8 to 7.3 m
1200 mm	6.4 to 7.3 m
1050 mm	7.3 m

4. State furnished Type B laminated sign panels are 28 mm thick for sign lengths of 4.6 m and less. Panel over 4.6 m in length are 66 mm thick.
5. Embedment "E" for Type L post shall conform to the requirements in Table 2. Embedment for Type M posts shall be 1.8 m minimum.
6. Diameter of post holes for Type L posts shall be at least 750 mm. Diameter of post holes for Type M posts shall be at least 600 mm.

DIST	COUNTY	ROUTE	KILOMETER POST TOTAL PROJECT	SHEET NO.	TOTAL SHEETS

REGISTERED CIVIL ENGINEER

July 1, 1997
PLANS APPROVAL DATE

REGISTERED PROFESSIONAL ENGINEER Gerry Weis No. C18915 Exp. 6-30-01 CIVIL STATE OF CALIFORNIA

The State of California or its officers or agents shall not be responsible for the accuracy or completeness of electronic copies of this plan sheet.

STATE OF CALIFORNIA
DEPARTMENT OF TRANSPORTATION

ROADSIDE SIGNS LAMINATED WOOD BOX POST TYPICAL INSTALLATION DETAILS NO. 3

NO SCALE

ALL DIMENSIONS ARE IN MILLIMETERS UNLESS OTHERWISE SHOWN

RS3

STD. PLAN RS3

Return to Table of Contents

DIST	COUNTY	ROUTE	KILOMETER POST TOTAL PROJECT	SHEET NO.	TOTAL SHEETS

REGISTERED CIVIL ENGINEER

July 1, 1997
PLANS APPROVAL DATE

Jeffrey B. Woody
No. C41260
Exp. 3-31-99
CIVIL
STATE OF CALIFORNIA
REGISTERED PROFESSIONAL ENGINEER

The State of California or its officers or agents shall not be responsible for the accuracy or completeness of electronic copies of this plan sheet.

Metric

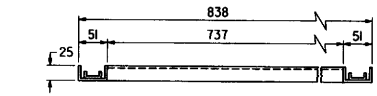

PLAN

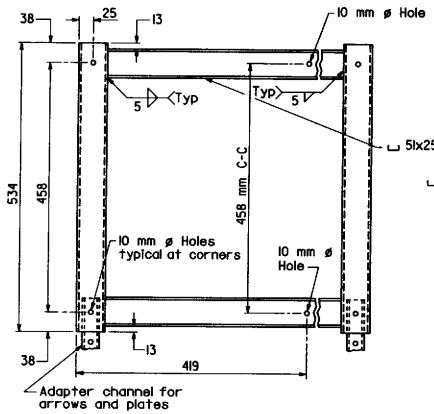

ELEVATION

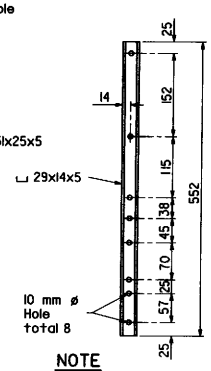

NOTE
Adapter channel rests inside frame channel when used.

ADAPTER CHANNEL

GALVANIZED STEEL FRAME

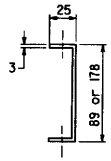

PLAN

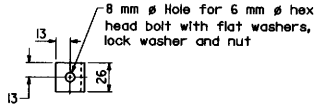

ELEVATION

SPECIAL BRACKET

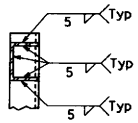

SECTION A-A

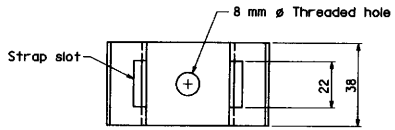

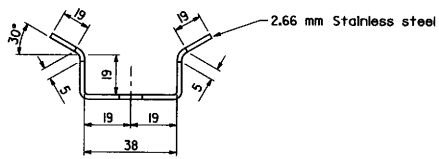

SADDLE BRACKET

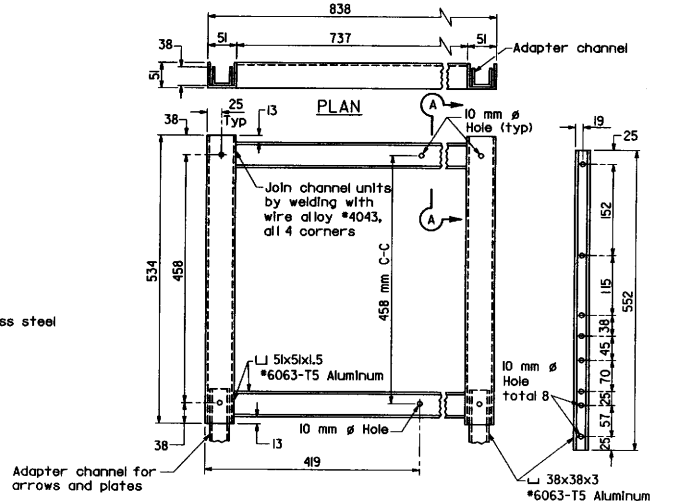

ELEVATION

ADAPTER CHANNEL

ALUMINUM FRAME

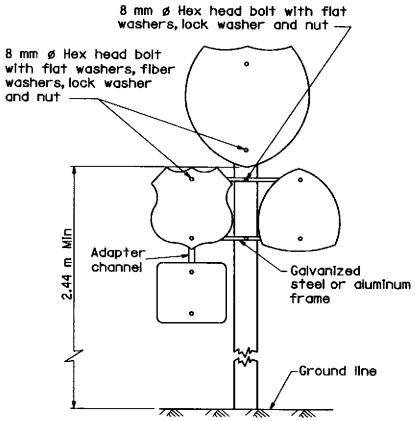

ELEVATION

MULTIPLE SIGN INSTALLATION

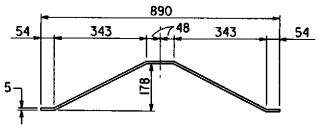

PLAN

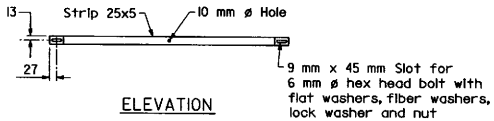

ELEVATION

BACK BRACE DETAILS

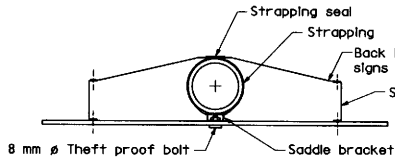

SINGLE SIGN

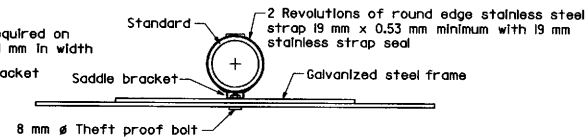

MULTIPLE SIGN

INSTALLATION ON ELECTROLIER, SIGNAL STANDARD OR SIGN STRUCTURE POST

STATE OF CALIFORNIA
DEPARTMENT OF TRANSPORTATION

ROADSIDE SIGNS TYPICAL INSTALLATION DETAILS NO.4

NO SCALE

ALL DIMENSIONS ARE IN MILLIMETERS UNLESS OTHERWISE SHOWN

RS4

Return to Table of Contents

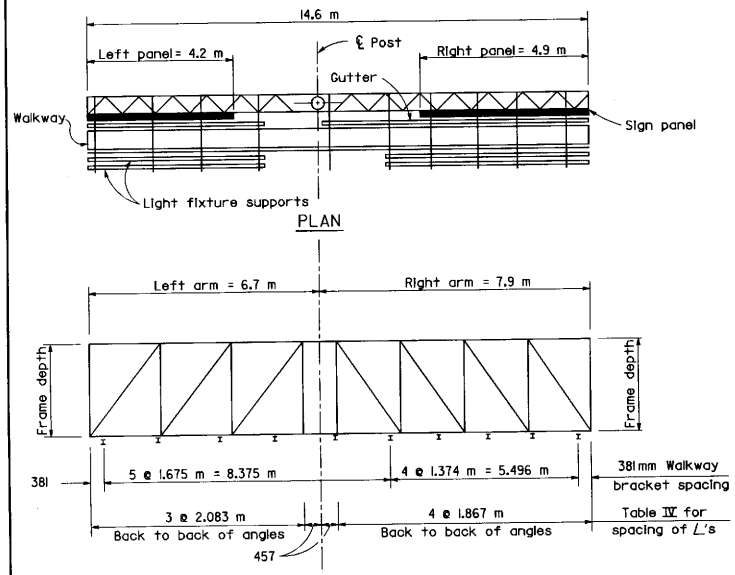

UNBALANCED SINGLE POST TYPE

EXAMPLE NO 1

INSTRUCTIONS TO FABRICATOR

PROJECT PLANS SHOW:

1. Sign structure location.
2. Length of structure frame.
3. Panel size and locations on structure.
4. Walkway length for 2-post signs.
5. Post type and height to bottom of frame.
6. Base plate elevation.
7. Footing elevation or location of pile foundation.
8. Photoelectric cell location if required.

REFER TO THE FOLLOWING STANDARD PLANS FOR DETAILS NOT SHOWN ON PROJECT PLANS:

S1	Instructions and Examples
S2	Post Types II Thru VIII
S3	Post Types I-S Thru VII-S
S4	Structural Frame Members
S5	Structural Frame Members
S6	Structural Frame Details
S7	Frame Junction Details
S8A,B,C,D	Sign Panel Mounting Details
S9	Walkway Details No 1
S10	Walkway Details No 2
S11	Walkway Safety Railing Details
S13	Pile Foundation
ES-29	Mercury Sign Lighting Equipment
ES-32A	Sign Lighting Equipment

WALKWAY BRACKETS:

Space all walkway brackets maintaining uniform spacing where possible. Maximum spacing shall not exceed 1675 mm.

LIGHTING FIXTURE SUPPORTS:

Where distance from walkway bracket to end of sign panel exceeds 406 mm, extend lighting fixture supports to next walkway bracket. See Example No 2.

WALKWAY AND SAFETY RAILING:

Walkway to be continuous for entire length of frame for single post signs. For 2 post signs see Project Plans. Safety railing to protect entire walkway, but continuous for no more than 3.35 m in one unit.

NOTE

Signs are shown and dimensioned looking in the direction of traffic. Double faced signs are shown and dimensioned looking ahead along stationing.

Caltrans Metric

DIST	COUNTY	ROUTE	KILOMETER POST TOTAL PROJECT	SHEET NO.	TOTAL SHEETS

REGISTERED CIVIL ENGINEER

July 1, 1997

PLANS APPROVAL DATE

The State of California or its officers or agents shall not be responsible for the accuracy or completeness of electronic copies of this plan sheet.

REGISTERED PROFESSIONAL ENGINEER Jeffrey B. Woody No. C41260 Exp. 3-31-99 CIVIL STATE OF CALIFORNIA

NOTES

SPECIFICATIONS:

DESIGN: AASHTO Specifications for Structural Supports for Highway Signs, Luminaires and Traffic Signals, dated 1994.

CONSTRUCTION: Standard Specifications and the Special Provisions.

LOADING:

WIND LOADING:
Normal to face of sign: 1490 Pa
Transverse to face of sign: 20% of normal force.
WALKWAY LOADING:
Dead load+2.22 kN concentrated live load.

UNIT STRESSES:

STRUCTURAL STEEL: fs = 138 MPa
REINFORCED CONCRETE: fs = 138 MPa
fc = 8.3 MPa
FOOTING SOIL PRESSURE: 120 KPa (spread footing)

MINIMUM CLEARANCE: Vertical roadway clearance 5.5 m.

WELDING: All welding continuous unless otherwise noted on the plans. All welding to be done in accordance with the Standard Specifications.

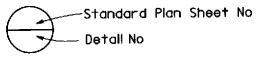

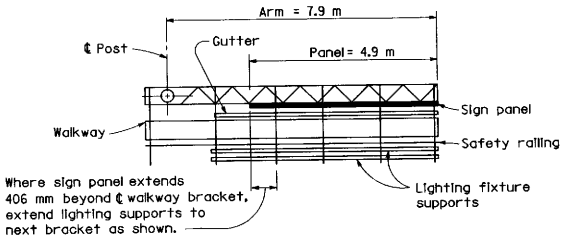

PLAN

CANTILEVER SINGLE POST TYPE

EXAMPLE NO 2

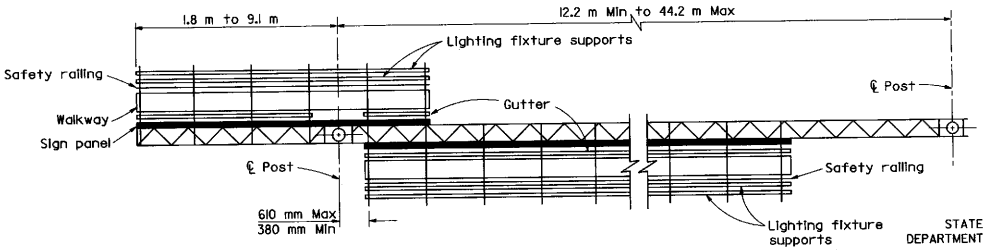

PLAN

TWO POST TYPE WITH CANTILEVER (PART DOUBLE-FACED)

EXAMPLE NO 3

STATE OF CALIFORNIA
DEPARTMENT OF TRANSPORTATION

OVERHEAD SIGNS-TRUSS INSTRUCTIONS AND EXAMPLES

NO SCALE

ALL DIMENSIONS ARE IN MILLIMETERS UNLESS OTHERWISE SHOWN

S1

STD. PLAN S1

Return to Table of Contents

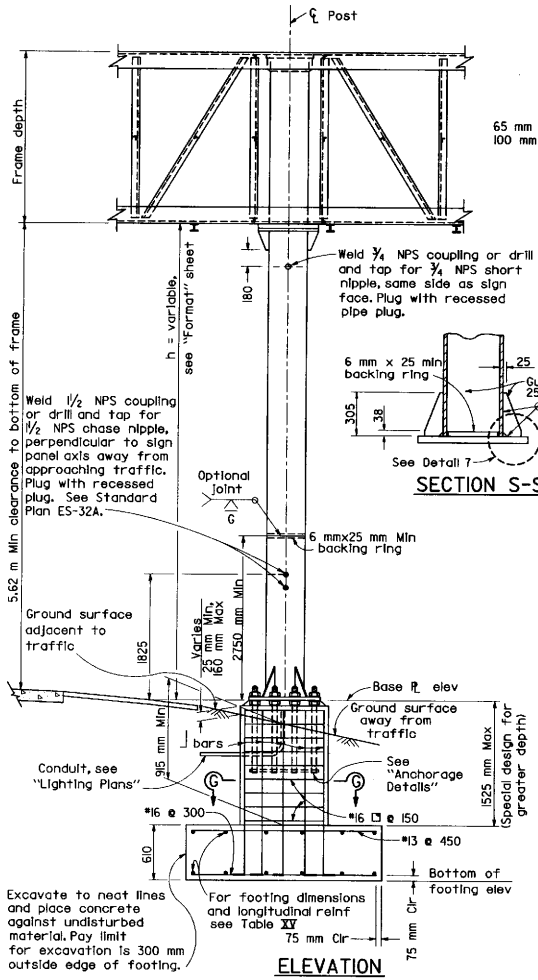

ELEVATION

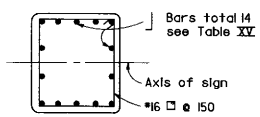

SECTION G-G

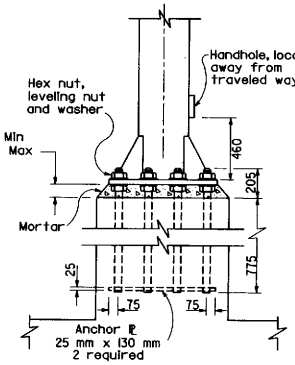

ANCHORAGE DETAILS

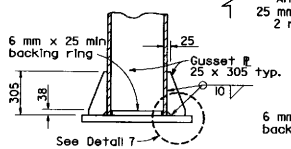

SECTION S-S

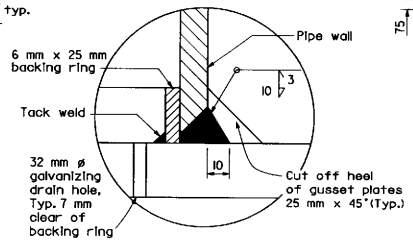

THRU POST @ BASE ℙ (NO COVER ℙ)

DETAIL 7

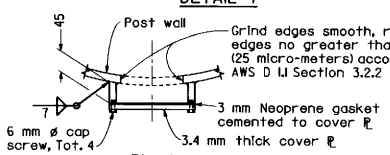

PLAN

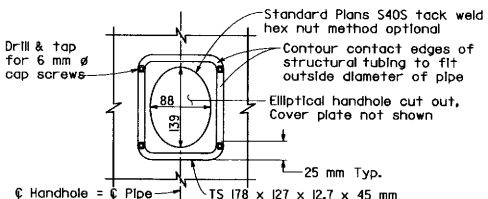

ELEVATION

TYPICAL DETAILS OF HANDHOLE AND COVER

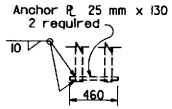

DOUBLE SIDE BOLT

TYPE VII

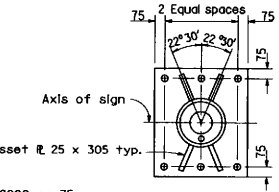

TYPE II III & IV

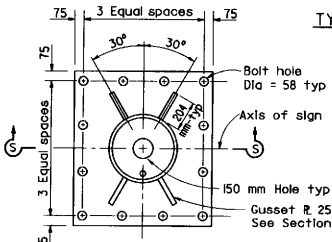

TYPE VII

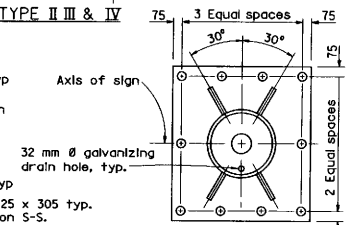

TYPE V & VI

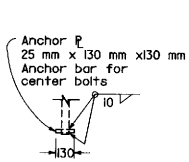

SINGLE SIDE BOLT

TYPE V & VI

TYPICAL BASE PLATES

TABLE XV

Post Type	Pipe Size NPS	Pipe Size "t" (mm)	Cap Plate Size (mm)	Base Plate Size (Note #2) (mm)	51 mm ø Anchor Bolts	Pedestal Size (Note #2) (mm)	Footing Size (Note #2) (m)	Longitudinal Footing Reinforcement Top	Longitudinal Footing Reinforcement Bottom	⌋ Bars
II	12	9.53	483 x 483 x 22	715 x 635 x 51	6	890 x 815	2.2 x 3.1	6-#13 bars	9-#16 bars	#16
III	14	12.7	508 x 508 x 22	790 x 690 x 51	6	965 x 865	2.4 x 3.7	6-#16 bars	8-#22 bars	#19
IV	16	12.7	560 x 560 x 22	940 x 840 x 51	6	1120 x 1020	2.5 x 4.3	6-#16 bars	9-#25 bars	#19
V	18	12.7	610 x 610 x 22	990 x 915 x 51	10	1170 x 1095	2.8 x 4.6	6-#16 bars	9-#29 bars	#22
VI	20	12.7	660 x 660 x 25	990 x 915 x 51	10	1170 x 1095	2.8 x 4.9	6-#19 bars	8-#32 bars	#25
VII	24	12.7	762 x 762 x 25	1095 x 990 x 51	12	1295 x 1195	3.1 x 5.2	7-#19 bars	10-#32 bars	#32

NOTES

1. For "General Notes" see Standard Plan S1.
2. Longer sides of base plates, pedestals and footing shall be normal to axis of sign.
3. Backfill shall be in place prior to erection of post.
4. Thread upper 200 mm of anchor bolts and galvanize upper 300 mm.
5. Spread footing shown, use Pile Foundation when shown on the Project Plans.
6. Anchor plates may be retained with hexagon nut or formed head as alternatives to details shown.
7. On single post sign structures, the post shall be raked out of plumb, with the use of the leveling nuts to make the bottom of the sign frame level.
8. At final position of post all top and bottom nuts shall be tightened against base plate.
9. When foundation is located on a steep slope with exposed face of concrete adjacent to traffic, see "Detail C" on Standard Plan S13.
10. Slope protection required when indicated on the Project Plans.

DIST	COUNTY	ROUTE	KILOMETER POST TOTAL PROJECT	SHEET NO.	TOTAL SHEETS

REGISTERED CIVIL ENGINEER

July 1, 1997
PLANS APPROVAL DATE

REGISTERED PROFESSIONAL ENGINEER Jeffrey B. Woody No. C41260 Exp. 3-31-99 CIVIL STATE OF CALIFORNIA

The State of California or its officers or agents shall not be responsible for the accuracy or completeness of electronic copies of this plan sheet.

STATE OF CALIFORNIA
DEPARTMENT OF TRANSPORTATION

OVERHEAD SIGNS-TRUSS SINGLE POST TYPE POST TYPES II THROUGH VII

NO SCALE

ALL DIMENSIONS ARE IN MILLIMETERS UNLESS OTHERWISE SHOWN

S2

STD. PLAN S2

Return to Table of Contents

DIST	COUNTY	ROUTE	KILOMETER POST TOTAL PROJECT	SHEET NO.	TOTAL SHEETS

REGISTERED CIVIL ENGINEER

July 1, 1997
PLANS APPROVAL DATE

REGISTERED PROFESSIONAL ENGINEER Jeffrey B. Woody No. C41260 Exp. 3-31-99 CIVIL STATE OF CALIFORNIA

The State of California or its officers or agents shall not be responsible for the accuracy or completeness of electronic copies of this plan sheet.

TABLE XIV

Post Type	Pipe Size NPS	Pipe Size Wall Thickness (mm)	Split (mm)	Base Plate Size (See Note 3) (mm)	Anchor Bolts (mm)	Pedestal Size (See Note 3) (mm)	Footing Size (See Note 3) meter x meter	Longitudinal Footing Reinforcement Top	Longitudinal Footing Reinforcement Bottom	⌋ Bars
I-S	10	9.27	102	685x535x51	6-51 ø	850x700	1.5x3.1	5-#16 bars	5-#19 bars	#19
II-S	12	9.53	127	760x585x51	6-51 ø	925x775	1.9x3.4	6-#16 bars	6-#22 bars	#22
III-S	14	12.70	127	840x610x51	6-51 ø	1000x800	2.2x4.0	7-#16 bars	7-#25 bars	#25
IV-S	16	12.70	152	890x790x51	8-51 ø	1075x975	2.5x4.3	8-#16 bars	8-#29 bars	#29
V-S	18	12.70	178	940x840x51	8-51 ø	1125x1025	2.5x4.9	8-#16 bars	8-#29 bars	#29
VI-S	20	12.70	204	1040x840x51	8-51 ø	1225x1025	2.8x5.2	9-#16 bars	9-#32 bars	#32
VII-S	24	12.70	204	1145x990x51	8-57 ø	1350x1200	3.1x5.5	10-#19 bars	10-#36 bars	#36

NOTES

1. For "General Notes" see Standard Plan S1.
2. Longer sides of base plates, pedestals and footings; shall be normal to axis of sign.
3. Backfill shall be in place prior to erection of post.
4. Thread upper 203 mm of anchor bolts and galvanize upper 305 mm.
5. Spread footing shown, use pile foundation when shown on the Project Plans.
6. Anchor plates may be retained with hex nut or formed head as an alternative to details shown.
7. When foundation is located on a steep slope with exposed face of concrete adjacent to traffic, see "Detail C" on Standard Plan S13.
8. Slope protection required when indicated on Project Plans.

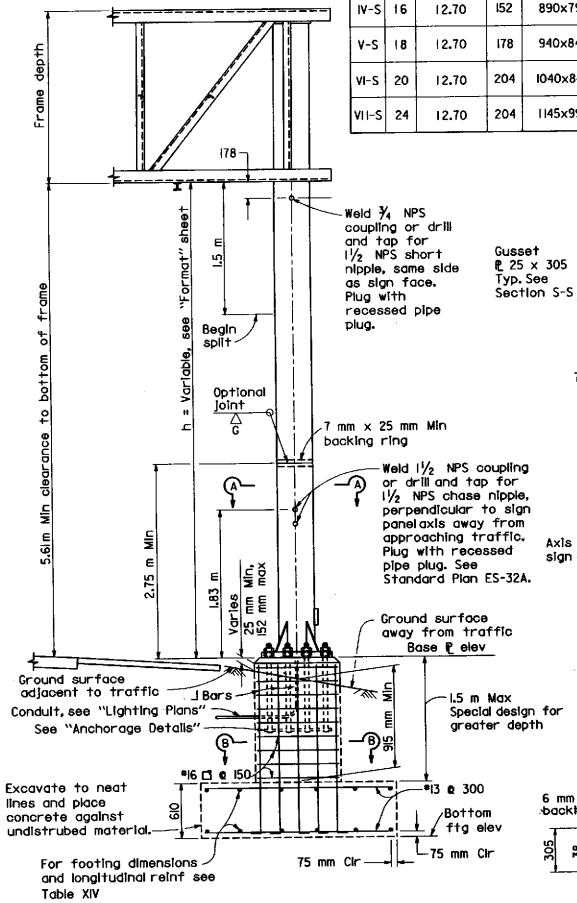

ELEVATION

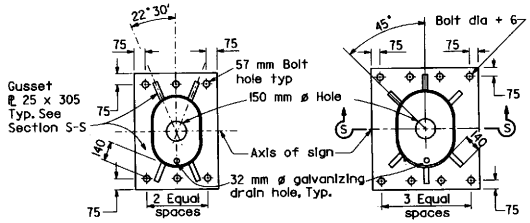

6 BOLT TYPE

8 BOLT TYPE

TYPICAL BASE PLATES

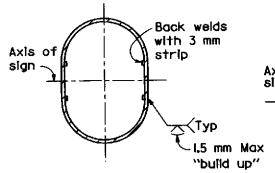

SECTION A-A

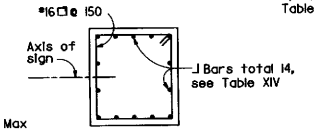

SECTION B-B

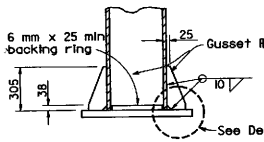

SECTION S-S

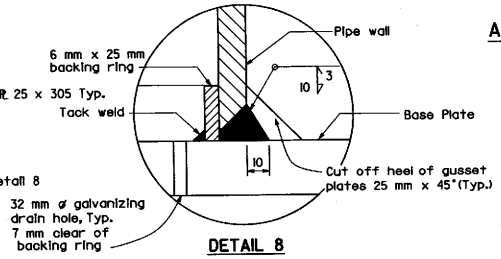

DETAIL 8

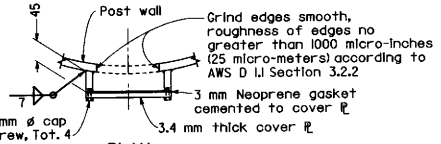

PLAN

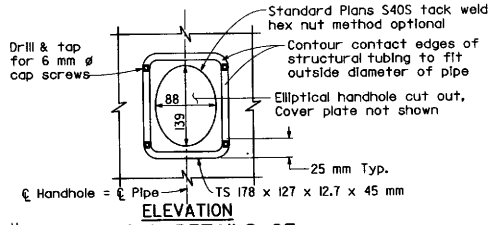

ELEVATION

TYPICAL DETAILS OF HANDHOLE AND COVER

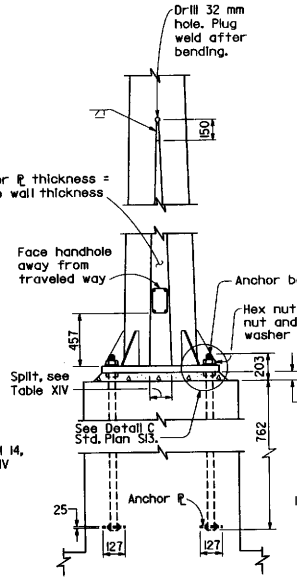

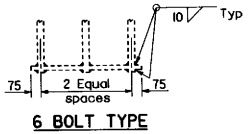

6 BOLT TYPE

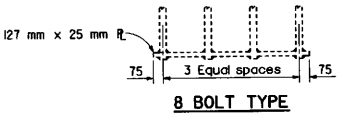

8 BOLT TYPE

ANCHORAGE DETAILS

STATE OF CALIFORNIA
DEPARTMENT OF TRANSPORTATION

OVERHEAD SIGNS-TRUSS TWO POST TYPE POST TYPES I-S THROUGH VII-S

NO SCALE

ALL DIMENSIONS ARE IN MILLIMETERS UNLESS OTHERWISE SHOWN

S3

STD. PLAN S3

Return to Table of Contents

DIST	COUNTY	ROUTE	KILOMETER POST TOTAL PROJECT	SHEET NO.	TOTAL SHEETS

Caltrans Metric

REGISTERED CIVIL ENGINEER

July 1, 1997
PLANS APPROVAL DATE

REGISTERED PROFESSIONAL ENGINEER Jeffrey B. Woody No. C41260 Exp. 3-31-99 CIVIL STATE OF CALIFORNIA

The State of California or its officers or agents shall not be responsible for the accuracy or completeness of electronic copies of this plan sheet.

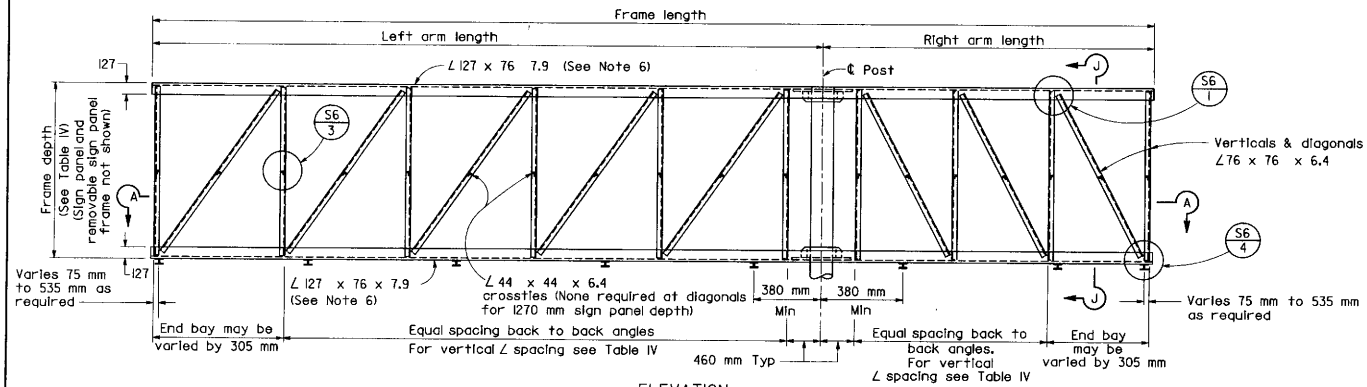

ELEVATION

NOTE

Left arm may be shorter, longer or equal to right arm length

Sign Panel Depth (mm)	Frame Depth (mm)	Maximum Vertical ∠ Spacing (mm)	See Note 7 (mm)
1270	1423	1375	1220
1524	1675	1525	1220
1778	1931	1675	1220
2032	2185	1830	1525
2286	2439	2135	1525
2540	2693	2135	1830
2794	2693	2135	1830
3048	2693	2135	1830

TABLE IV

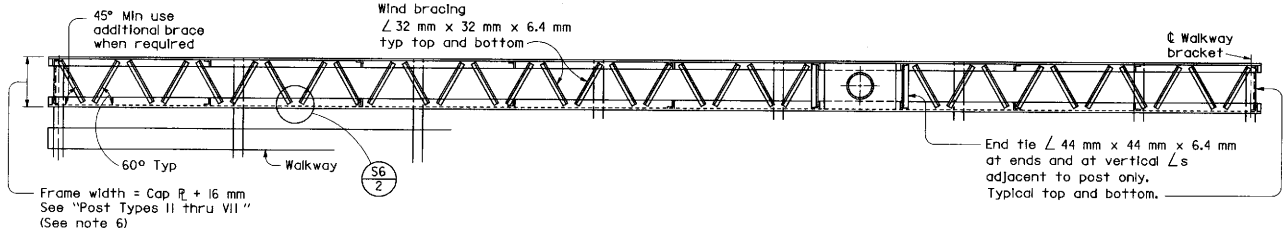

SECTION A-A

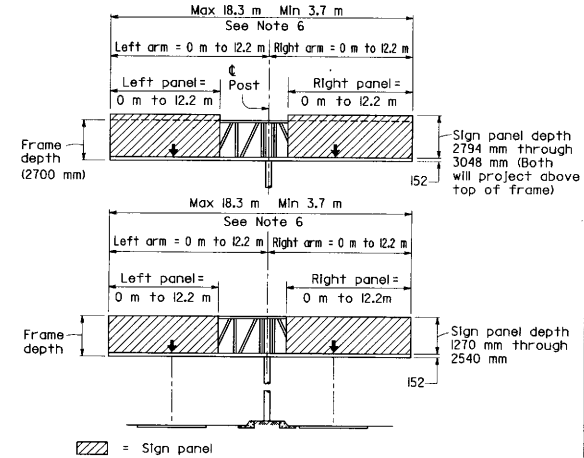

RANGE OF STRUCTURE SIZES

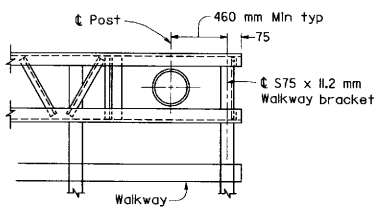

PART PLAN OF CANTILEVER TYPE AT POST

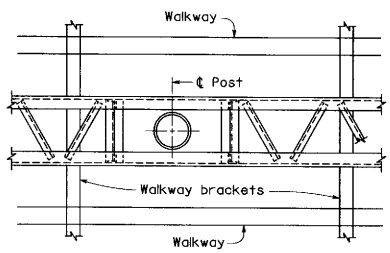

PART PLAN OF DOUBLE FACED TYPE AT POST

NOTES

1. For connection of frame to post see S7
2. For walkway see S9 and S10
3. For walkway length see S1
4. Minimum length of frame = 3.66 m.
5. Maximum length of frame = 18.29 m.
6. For arm lengths 10.67 m to 12.19 m and sign depths 2032 mm thru 3048 mm:
   a. Use 127 x 76 x 7.9 chord ∠s.
   b. Frame width = Cap plate + 22 mm.
7. Diagonal not required if arm length is equal to or less than shown in this column see table IV.

Standard Plan sheet number
Detail number

STATE OF CALIFORNIA
DEPARTMENT OF TRANSPORTATION

OVERHEAD SIGNS-TRUSS SINGLE POST TYPE STRUCTURAL FRAME MEMBERS

NO SCALE

ALL DIMENSIONS ARE IN MILLIMETERS UNLESS OTHERWISE SHOWN

S4

Return to Table of Contents

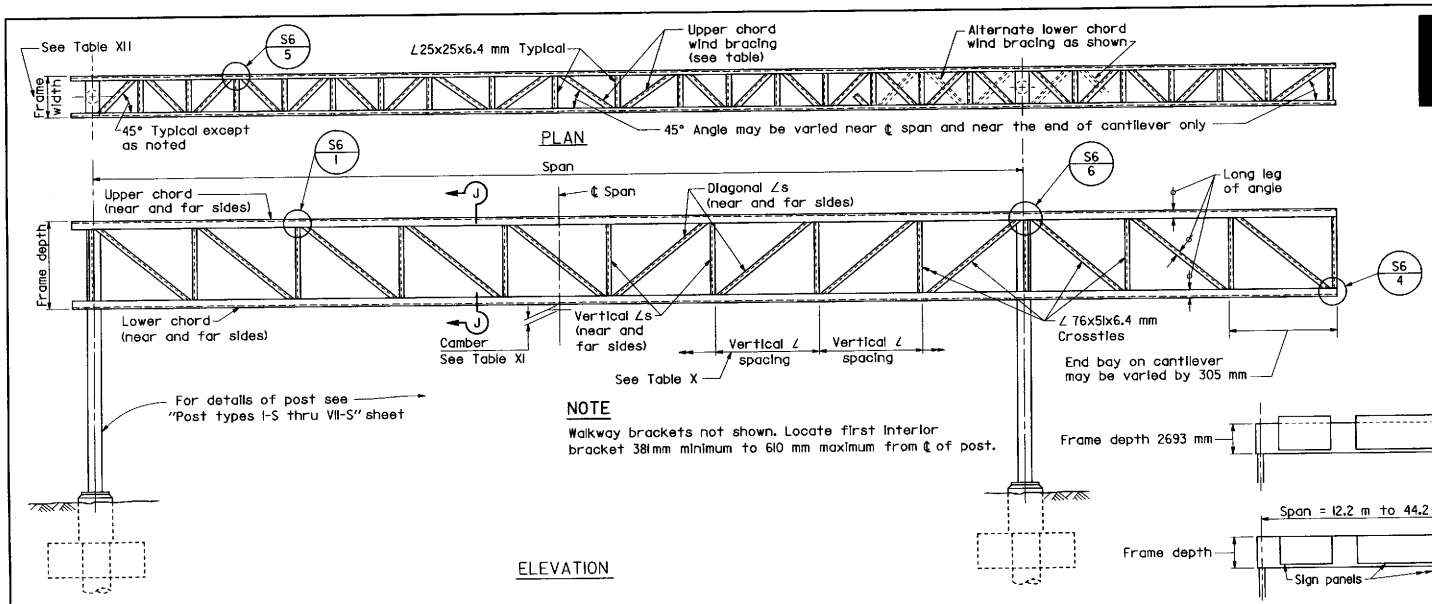

NOTE

Walkway brackets not shown. Locate first interior bracket 381mm minimum to 610 mm maximum from ℄ of post.

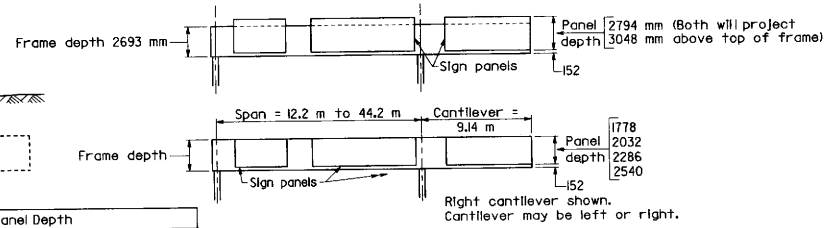

Span (m)	1778 mm Panel Depth					2032 mm Panel Depth					2286 mm Panel Depth				
	Frame Width (mm)	Chord L's	Vertical L's	Diagonal L's	Wind Bracing L's	Frame Width (mm)	Chord L's	Vertical L's	Diagonal L's	Wind Bracing L's	Frame Width (mm)	Chord L's	Vertical L's	Diagonal L's	Wind Bracing L's
12.19-15.24	610 *	127x89x7.9	76x76x6.4	76x76x6.4	32x32x6.4	610 *	127x89x7.9	76x76x6.4	76x76x6.4	32x32x6.4	610 *	127x89x7.9	76x76x7.9	76x76x7.9	32x32x6.4
15.55-18.29	610 *	127x89x7.9			32x32x6.4	610 *	127x89x7.9			32x32x6.4	610 *	127x89x7.9			32x32x6.4
18.30-21.34	762 †	127x89x7.9			32x32x6.4	762 †	127x89x7.9			32x32x6.4	762 †	127x89x7.9			32x32x6.4
21.35-24.38	762 †	152x102x9.5			32x32x6.4	762 †	152x102x9.5			32x32x6.4	915	152x102x9.5			38x38x6.4
24.39-27.43	915	152x102x9.5			38x38x6.4	915	152x102x9.5			38x38x6.4	915	152x102x9.5			44x44x6.4
27.44-30.48	915	152x102x9.5			38x38x6.4	915	152x102x9.5			38x38x6.4	915	152x102x9.5			44x44x6.4
30.49-33.53	915	178x102x12.7			44x44x6.4	915	178x102x12.7			44x44x6.4	915	178x102x12.7			44x44x6.4
33.54-36.58	915	178x102x12.7			44x44x6.4	915	178x102x12.7			44x44x6.4	915	203x102x12.7			44x44x6.4
36.59-40.23	915	203x102x12.7			44x44x6.4	915	203x102x12.7			44x44x6.4	1067	203x102x12.7			51x51x6.4
40.24-44.20	915	203x102x12.7			44x44x6.4	915	203x102x19.0			44x44x6.4	1067	203x102x19.0			51x51x6.4

Span (m)	2540 mm Panel Depth				
	Frame Width (mm)	Chord L's	Vertical L's	Diagonal L's	Wind Bracing L's
12.19-15.24	610 *	127x89x7.9	76x76x7.9	76x76x7.9	32x32x6.4
15.55-18.29	610 *	127x89x7.9			32x32x6.4
18.59-21.34	762 †	127x89x7.9			38x38x6.4
21.64-24.38	915	152x102x9.5			44x44x6.4
24.69-27.43	915	152x102x9.5			44x44x6.4
27.74-30.48	915	152x102x9.5			44x44x6.4
30.79-33.53	1067	178x102x12.7			51x51x6.4
33.83-36.58	1067	178x102x12.7			51x51x6.4
36.88-40.23	1067	203x102x12.7			51x51x6.4
40.54-44.20	1067	203x102x19.0			51x51x6.4

Span (m)	2794 mm and 3048 mm Panel Depth				
	Frame Width (mm)	Chord L's	Vertical L's	Diagonal L's	Wind Bracing L's
12.19-15.24	610 *	127x89x7.9	76x76x7.9	76x76x7.9	44x44x6.4
15.55-18.29	610 *	127x89x7.9			44x44x6.4
18.59-21.34	762 †	127x89x7.9			51x51x6.4
21.64-24.38	915	152x102x9.5			51x51x6.4
24.69-27.43	915	152x102x9.5			64x64x6.4
27.74-30.48	1067	152x102x9.5			64x64x6.4
30.79-33.53	1067	178x102x12.7			64x64x6.4
33.83-36.58	1067	203x102x12.7			76x76x12.7
36.88-40.23	1067	203x102x19.0	89x89x7.9		76x76x12.7
40.54-44.20	1067	229x102x15.9			76x76x12.7

TABLE XII

NOTES

Frame widths shown are nominal. These widths may be varied by 6 mm to standardize fabrication methods.

* Add 152 mm to frame width for post Types V-S and VI-s. Add 305 mm for post Type VII-S.

† Add 153 mm to frame width for post Type VII-S.

RANGE OF STRUCTURE SIZES

Panel Depth (mm)	Frame Depth (mm)	Max Vertical ∠ Spacing (mm)
1778	1931	1829
2032	2185	1829
2286	2439	2286
2540	2693	2286
2794	2693	2286
3048	2693	2286

TABLE X

Camber For Fabrication At ℄ Span	
Span (m)	Camber (mm)
12.19 - 15.24	13
15.25 - 30.48	26
30.49 - 44.20	38

Camber to approximate parabola. Camber of cantilever arm = +13 mm for arms greater than 3.05 m.

TABLE XI

Caltrans Metric

DIST	COUNTY	ROUTE	KILOMETER POST TOTAL PROJECT	SHEET NO.	TOTAL SHEETS

Jeffrey B. Woody
REGISTERED CIVIL ENGINEER
July 1, 1997
PLANS APPROVAL DATE
The State of California or its officers or agents shall not be responsible for the accuracy or completeness of electronic copies of this plan sheet.
REGISTERED PROFESSIONAL ENGINEER Jeffrey B. Woody No. C41260 Exp. 3-31-99 CIVIL STATE OF CALIFORNIA

STATE OF CALIFORNIA
DEPARTMENT OF TRANSPORTATION

OVERHEAD SIGNS-TRUSS TWO POST TYPE STRUCTURAL FRAME MEMBERS

NO SCALE

ALL DIMENSIONS ARE IN MILLIMETERS UNLESS OTHERWISE SHOWN

S5

STD. PLAN S5

Return to Table of Contents

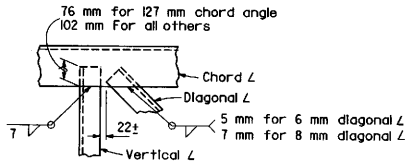

DETAIL ①

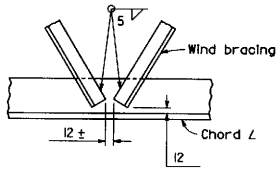

DETAIL ②

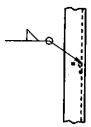

DETAIL ③

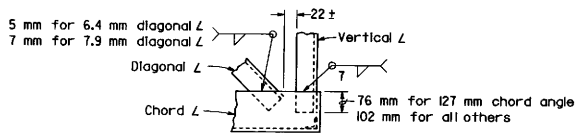

DETAIL ④

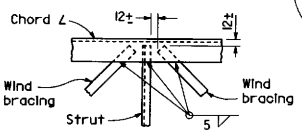

DETAIL ⑤

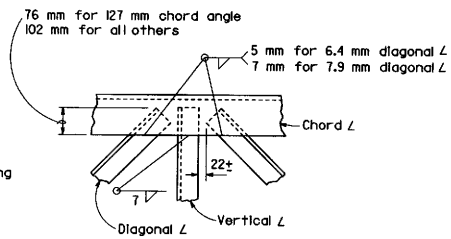

DETAIL ⑥

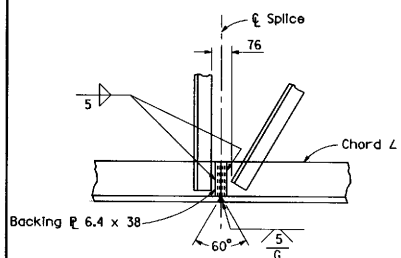

WELDED CHORD SPLICE

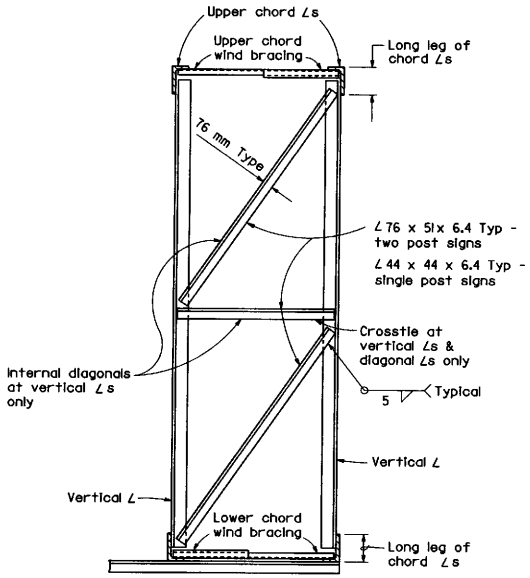

TYPICAL SECTION J-J

NOTE

Diagonal ∠s in plane of truss not shown. Bracing shown is at all vertical ∠s of truss.

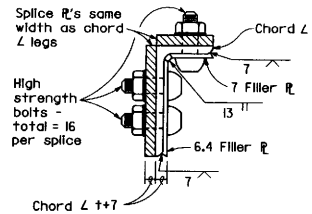

SECTION T-T

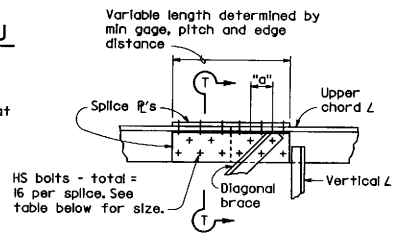

SPLICE WITH DIAGONAL ANGLE

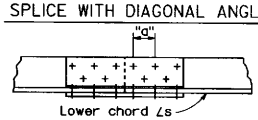

SPLICE WITHOUT DIAGONAL ANGLE

BOLTED CHORD SPLICE

BOLTED CHORD SPLICE		
TWO POST SIGNS		
Chord ∠	Nominal Bolt Diameter	"a" mm min.
127 x 89 x 7.9	3/4" (M20 x 2.5)	64
152 x 102 x 9.5	7/8" (M22 x 2.5)	76
178 x 102 x 12.7	1" (M27 x 3)	89
203 x 102 x 12.7	1 1/8" (M27 x 3)	89
203 x 102 x 19.0	1 1/4" (M30 x 3.5)	96
229 x 102 x 15.9	1 1/4" (M30 x 3.5)	96
SINGLE POST SIGNS		
Chord ∠	Nominal Bolt Diameter	"a" mm min.
127 x 76 x 7.9	3/4" (M20 x 2.5)	64
127 x 76 x 11.1	3/4" (M20 x 2.5)	64

SPLICE NOTES

Location of Splices:

The splice shall be located so as not to interfere with mounting the walkway brackets or the clip angles for the removeable sign panel frame. The wind bracing in the area of the bolted chord splice shall be bolted to the chord angles with a 10 mm Ø H.S. bolt, nut, 2 cut washers and lock washer.

Filler ℙ:

The plates welded to the angle legs on the inside shall be welded before punching the bolt holes. They shall be the same length as the cover plates. The plates are not necessary on the single post signs if the splice is located over 1/3 of the cantilever length from the post. Alternative splice details may be used if approved by the Engineer.

DIST	COUNTY	ROUTE	KILOMETER POST TOTAL PROJECT	SHEET NO.	TOTAL SHEETS

Metric

REGISTERED CIVIL ENGINEER

July 1, 1997
PLANS APPROVAL DATE

REGISTERED PROFESSIONAL ENGINEER Jeffrey B. Woody No. C41260 Exp. 3-31-99 CIVIL STATE OF CALIFORNIA

The State of California or its officers or agents shall not be responsible for the accuracy or completeness of electronic copies of this plan sheet.

STATE OF CALIFORNIA
DEPARTMENT OF TRANSPORTATION

OVERHEAD SIGNS-TRUSS STRUCTURAL FRAME DETAILS

NO SCALE

ALL DIMENSIONS ARE IN MILLIMETERS UNLESS OTHERWISE SHOWN

S6

STD. PLAN S6

Return to Table of Contents

DIST	COUNTY	ROUTE	KILOMETER POST TOTAL PROJECT	SHEET NO.	TOTAL SHEETS

Caltrans Metric

REGISTERED CIVIL ENGINEER

July 1, 1997
PLANS APPROVAL DATE

REGISTERED PROFESSIONAL ENGINEER Jeffrey B. Woody No. C41260 Exp. 3-31-99 CIVIL STATE OF CALIFORNIA

The State of California or its officers or agents shall not be responsible for the accuracy or completeness of electronic copies of this plan sheet.

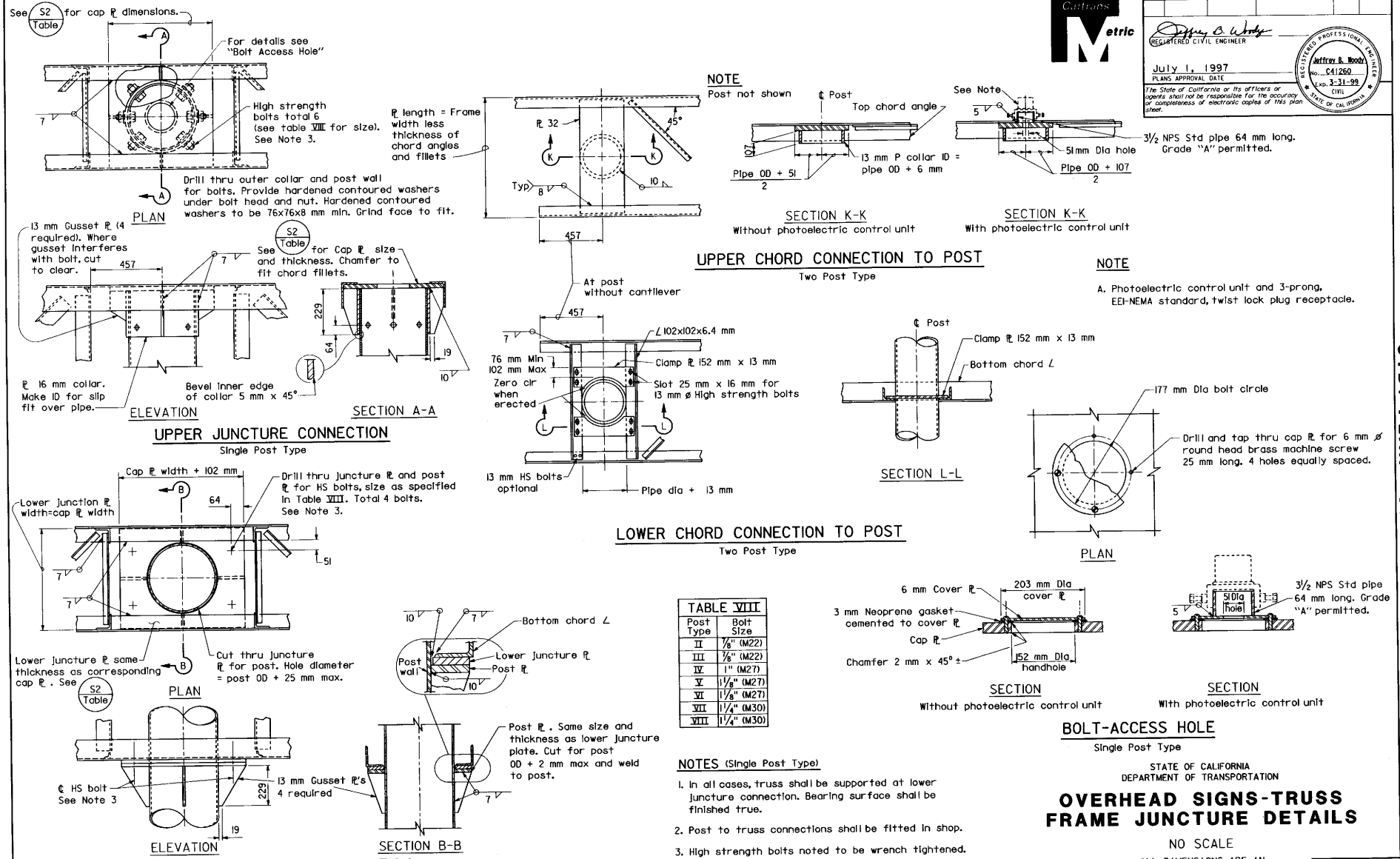

TABLE VIII	
Post Type	Bolt Size
II	⅞" (M22)
III	⅞" (M22)
IV	1" (M27)
V	1⅛" (M27)
VI	1⅛" (M27)
VII	1¼" (M30)
VIII	1¼" (M30)

NOTES (Single Post Type)

1. In all cases, truss shall be supported at lower juncture connection. Bearing surface shall be finished true.
2. Post to truss connections shall be fitted in shop.
3. High strength bolts noted to be wrench tightened. Torque requirements are waived.

STATE OF CALIFORNIA
DEPARTMENT OF TRANSPORTATION

OVERHEAD SIGNS-TRUSS FRAME JUNCTURE DETAILS

NO SCALE

ALL DIMENSIONS ARE IN MILLIMETERS UNLESS OTHERWISE SHOWN

S7

STD. PLAN S7

Return to Table of Contents

DIST	COUNTY	ROUTE	KILOMETER POST TOTAL PROJECT	SHEET NO.	TOTAL SHEETS

REGISTERED CIVIL ENGINEER

July 1, 1997
PLANS APPROVAL DATE

REGISTERED PROFESSIONAL ENGINEER Jeffrey B. Woody No. C41260 Exp. 3-31-99 CIVIL STATE OF CALIFORNIA

The State of California or its officers or agents shall not be responsible for the accuracy or completeness of electronic copies of this plan sheet.

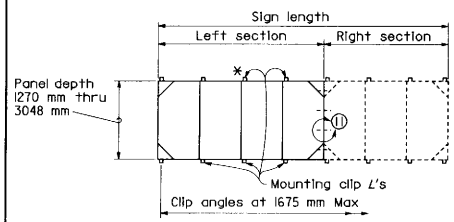

REMOVABLE FRAME GREATER THAN 6.10 m

* 2794 & 3048 m sign panel frames will project above the top chord of the truss. In these cases the top clips shall be bolted to vertical frame members. See Standard Plan S8D for details.

Sign Length (m)	Left Section (m)	Right Section (m)
6.71	3.66	3.05
7.32	3.66	3.66
7.925	3.66	4.27
8.534	4.88	3.66
9.14	4.88	4.27
9.75	4.88	4.88
10.36	4.88	5.49
10.97	6.10	4.88
11.58	6.10	5.49
12.20	6.10	6.10

NOTES

Frames for signs greater than 6.10 m in length shall be fabricated in two sections with left section a multiple of 1220 mm in length. See table above.

Sections shall be hoisted into place individually and bolted together as per detail 11 prior to tightening of mounting clip bolts.

Bolting two sections together and hoisting simutaneously will not be permitted.

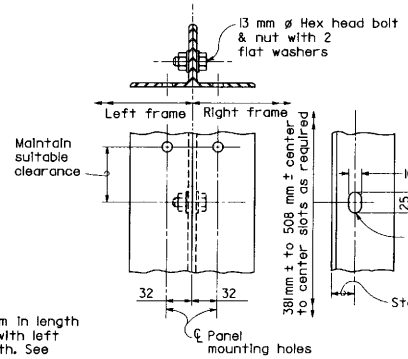

Panel Depth	No of slots
1.27	2
1.78	3
2.03 & 2.29	4
2.54 & 2.79	5
3.05	6

DETAIL 11

NOTE

Panel mounting holes not shown. Panel lengths available in 610 mm increments.

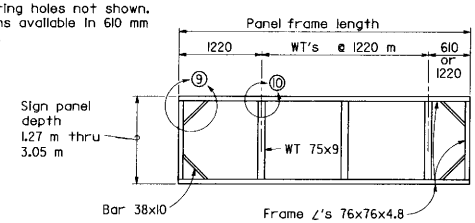

TYPICAL REMOVABLE FRAME

(1120 mm thru 6096 mm)

NOTES

1. Frames shall be all-welded construction.
2. Panel mounting holes shall be drilled by template. Sign panel may be considered a template.
3. Drilled and tapped holes 6.3 mm may be used where interference due to welds or structural members is encountered.
4. WT 75 x 9 mm shall be flush with faces of frame angles.
5. Mounting clip angles shall be located such as to allow the top and bottom frame angles of the removable sign panel to lie on a straight horizontal line.
6. Holes for mounting removable sign panel frame may be slotted 25 mm maximum parallel to the axis of the sign.
7. WT 75 x 9 may be crimped at ends to join frame angles. Fillet weld all around.

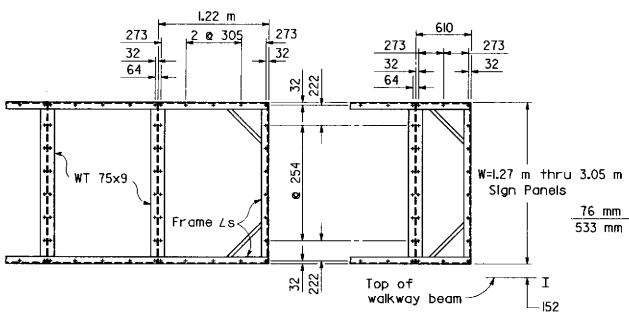

TYPICAL 1.22 m PANEL TYPICAL 610 mm PANEL

All holes 13 mm diameter maximum.

MOUNTING HOLE SPACING SIGN PANEL & FRAME

Hole spacing is for single sheet sign panels. For Overhead Formed Panels refer to "Overhead Formed Panel" Sheet.

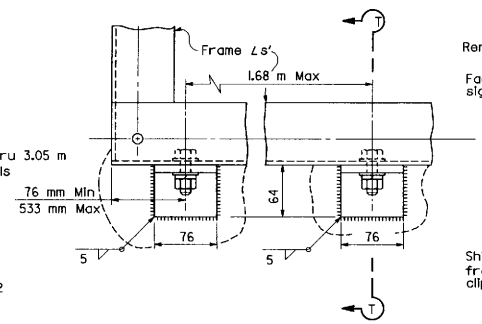

FRAME MOUNTING DETAILS

Details shown apply for sign panel frames ≤ 2540 mm deep. Mounting details for deeper panels shown on Standard Plan S8D.

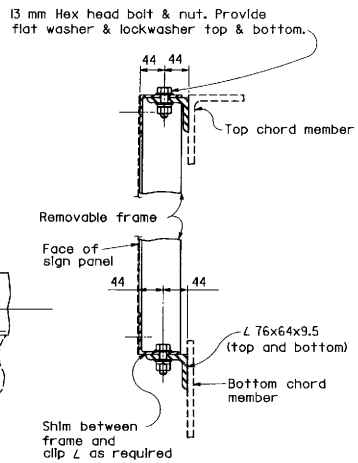

SECTION T-T

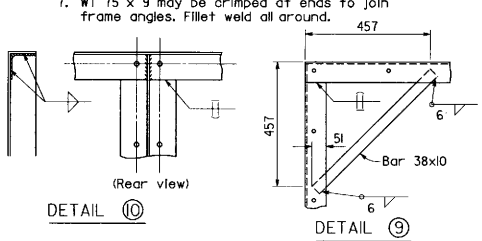

TYPICAL JOINT DETAILS

STATE OF CALIFORNIA
DEPARTMENT OF TRANSPORTATION

OVERHEAD SIGNS
STEEL FRAMES
REMOVABLE SIGN PANEL FRAMES

NO SCALE

ALL DIMENSIONS ARE IN MILLIMETERS UNLESS OTHERWISE SHOWN

S8A

STD. PLAN S8A

Return to Table of Contents

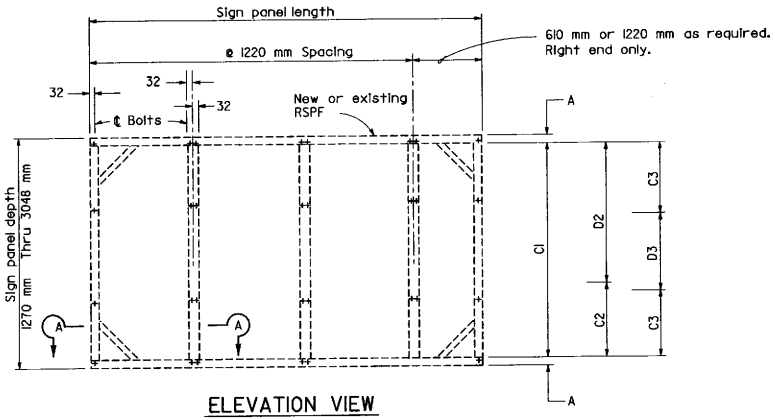

ELEVATION VIEW

NEW OR EXISTING REMOVABLE SIGN PANEL FRAME

MOUNTING HOLE SPACING

PANEL DEPTH (mm)	MOUNTING BOLT SPACING						
	A	1 Space	2 Space (mm)		3 Space (mm)		
		C1	C2	D2	C3	D3	C3
1270	32 mm	1207					
1524			730	730			
1778			1238	476			
2032			984	984			
2286			984	1238			
2540			1238	1238			
2794					984	762	984
3048	32 mm				1238	508	1238

TABLE 1

NOTE

Sign panel mounting holes 12 mm diameter maximum for 10 mm ø bolts.

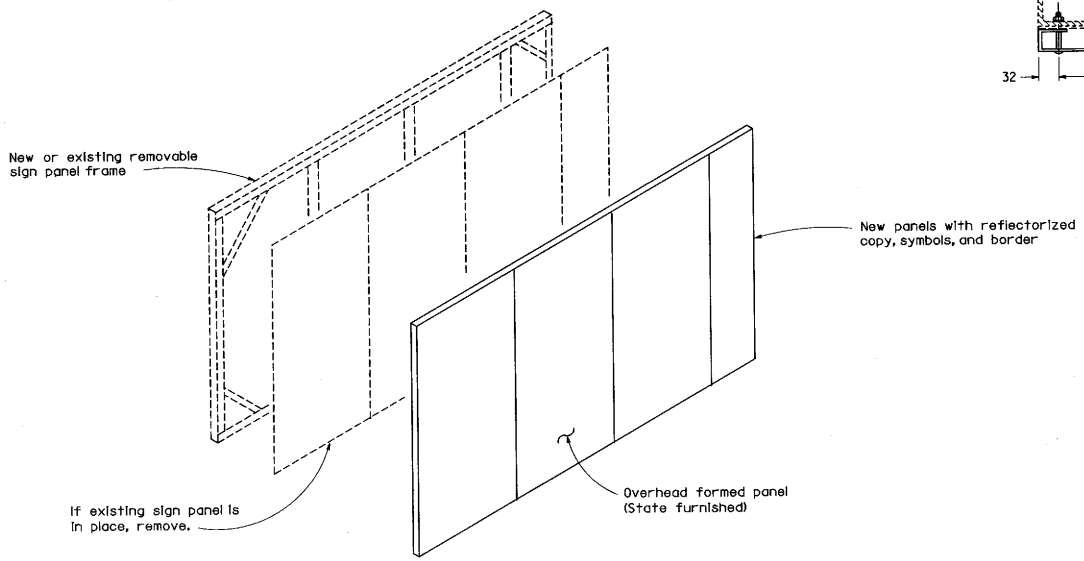

NOTE

The Contractor shall verify all dependent dimensions in the field before ordering or fabricating any material.

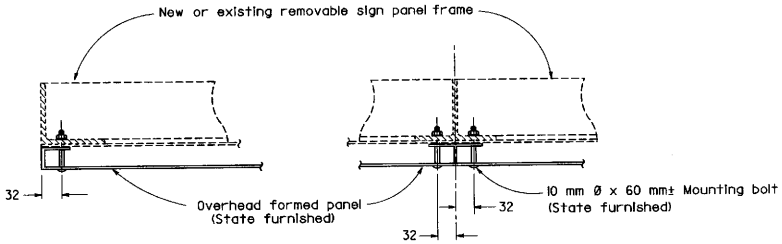

CORNER DETAIL

SECTION A-A

PANEL CONNECTION

NOTES

When constructing a new frame:

(1) Refer to Standard Plan Sheet S8A for structural details.

(2) Sign panels shall be considered as a template for drilling holes for mounting bolts.

DIST	COUNTY	ROUTE	KILOMETER POST TOTAL PROJECT	SHEET NO.	TOTAL SHEETS

REGISTERED CIVIL ENGINEER

July 1, 1997

PLANS APPROVAL DATE

REGISTERED PROFESSIONAL ENGINEER Jeffrey B. Woody No. C41260 Exp. 3-31-99 CIVIL STATE OF CALIFORNIA

The State of California or its officers or agents shall not be responsible for the accuracy or completeness of electronic copies of this plan sheet.

STATE OF CALIFORNIA
DEPARTMENT OF TRANSPORTATION

OVERHEAD SIGNS
REMOVABLE SIGN PANEL FRAMES
OVERHEAD FORMED PANEL
MOUNTING DETAILS

NO SCALE

ALL DIMENSIONS ARE IN MILLIMETERS UNLESS OTHERWISE SHOWN

S8B

STD. PLAN S8B

Return to Table of Contents

DIST	COUNTY	ROUTE	KILOMETER POST TOTAL PROJECT	SHEET NO.	TOTAL SHEETS

Jeffrey B. Woody
REGISTERED CIVIL ENGINEER

July 1, 1997
PLANS APPROVAL DATE

REGISTERED PROFESSIONAL ENGINEER Jeffrey B. Woody No. C41260 Exp. 3-31-99 CIVIL STATE OF CALIFORNIA

The State of California or its officers or agents shall not be responsible for the accuracy or completeness of electronic copies of this plan sheet.

Metric

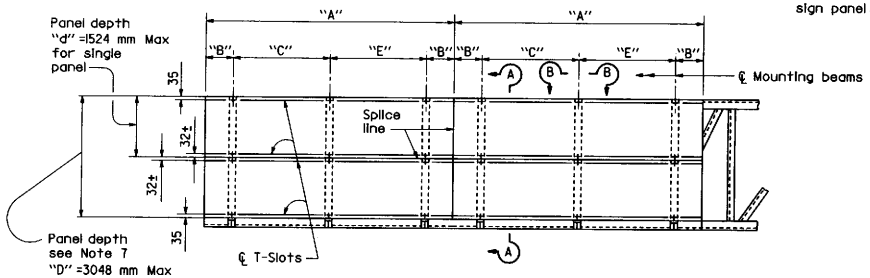

SIGN-ELEVATION

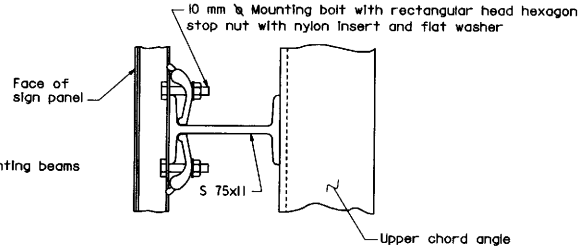

VIEW B-B

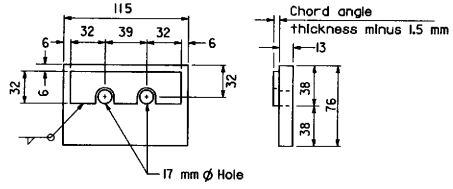

CHORD ANGLE CLAMP

SIGN PANEL LENGTH * (m)	NUMBER MOUNTING BEAMS	SIGN PANEL OVERHANG (mm)	MOUNTING BEAM SPACING (m)	(m)
"A"		"B"	"C"	"E"
1.52	2	229	1.02	
1.83	2	305	1.22	
2.13	2	381	1.37	
2.44	2	458	1.52	
2.74	2	559	1.63	
3.05	2	610	1.83	
3.35	2	610	2.13	
3.66	2	762	2.13	
3.96	2	762	2.44	
4.27	2	762	2.74	
4.57	2	915	2.74	
4.88	3	153	2.29	2.29
5.18	3	305	2.29	2.29
5.49	3	305	2.44	2.44
5.79	3	305	2.59	2.59
6.10	3	458	2.59	2.59
6.40	3	458	2.74	2.74
6.71	3	610	2.74	2.74
7.01	3	762	2.74	2.74
7.32	3	915	2.74	2.74

* Signs longer than 7.32 meters are fabricated and mounted as adjoining single panels.

MOUNTING BEAM SPACING TABLE

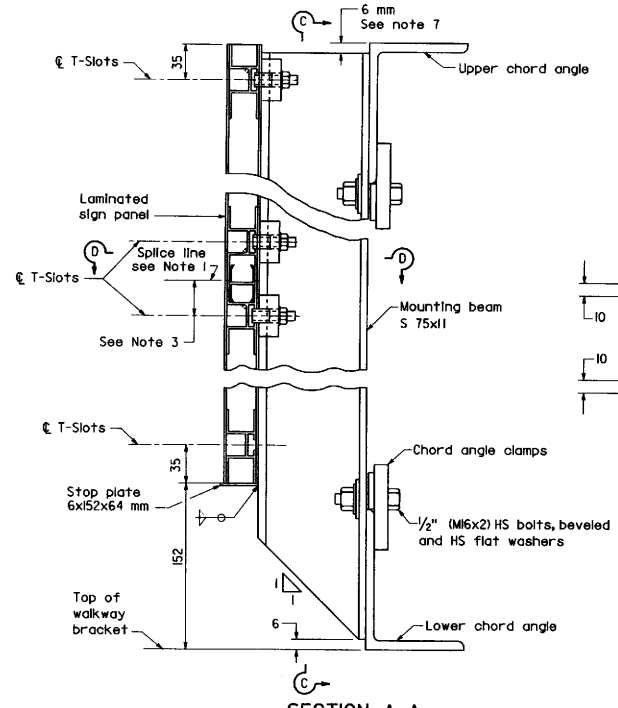

SECTION A-A

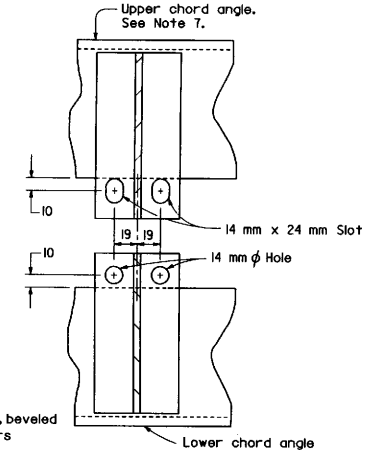

SECTION C-C

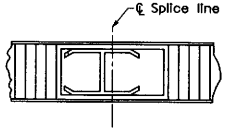

SECTION D-D

NOTES

1. The size and number of individual sign panel plus the location of splice line is dependent on the sign panel manufacturer.
2. Mounting bolts are required on each side of the horizontal splice lines.
3. Dimension varies from panel to panel. Average value approximate 32 mm.
4. Torque aluminum sign panel mounting bolts to 12.3 N-M.
5. Chord angle clamp to be galvanized after fabrication.
6. The Contractor shall verify all dependent dimensions in the field before ordering or fabricating any material.
7. 2750 mm and 3000 mm sign panel along with the mounting beams will project above the top chord truss member 10" and 20" respectively. Attachment details shall be the same.

STATE OF CALIFORNIA
DEPARTMENT OF TRANSPORTATION

OVERHEAD SIGNS-TRUSS SIGN MOUNTING DETAILS LAMINATED PANEL-TYPE A

NO SCALE

ALL DIMENSIONS ARE IN MILLIMETERS UNLESS OTHERWISE SHOWN

S8C

STD. PLAN S8C

Return to Table of Contents

DIST	COUNTY	ROUTE	KILOMETER POST TOTAL PROJECT	SHEET NO.	TOTAL SHEETS

REGISTERED CIVIL ENGINEER

July 1, 1997
PLANS APPROVAL DATE

The State of California or its officers or agents shall not be responsible for the accuracy or completeness of electronic copies of this plan sheet.

REGISTERED PROFESSIONAL ENGINEER Jeffrey B. Woody No. C41260 Exp. 3-31-99 CIVIL STATE OF CALIFORNIA

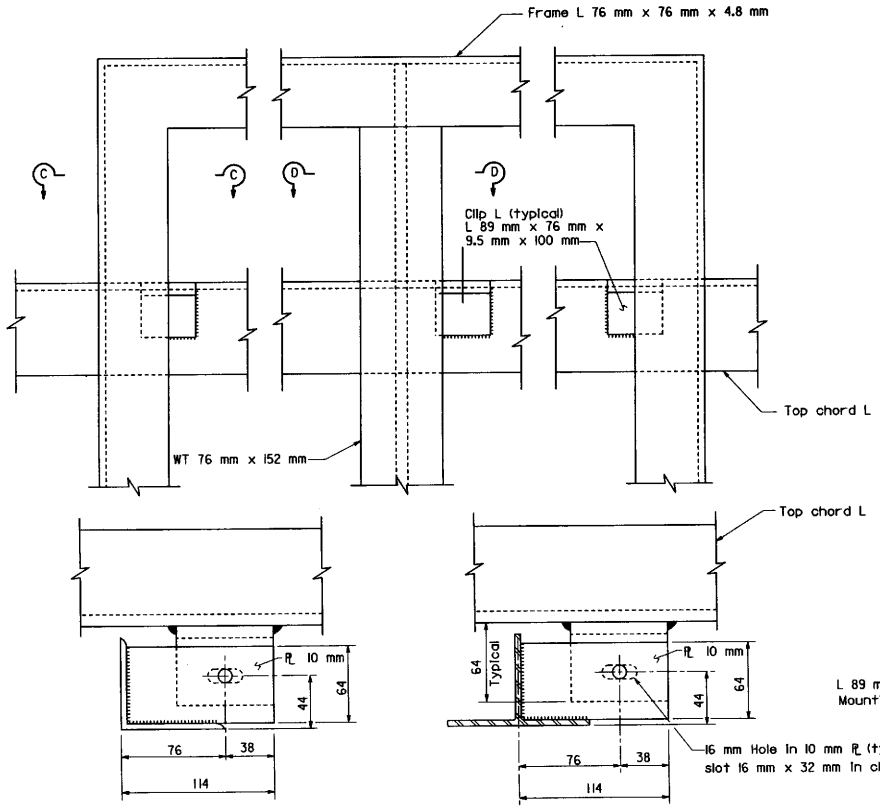

SECTION C-C

SECTION D-D

ALTERNATIVE CONNECTION AT TOP CHORD

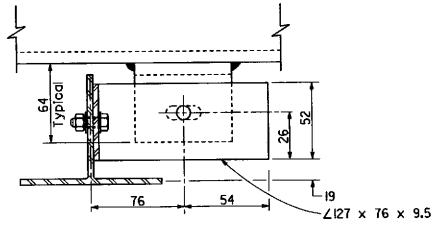

BOLTED ALTERNATIVE CONNECTION AT TOP CHORD

For details not shown, see Sections C-C and D-D.

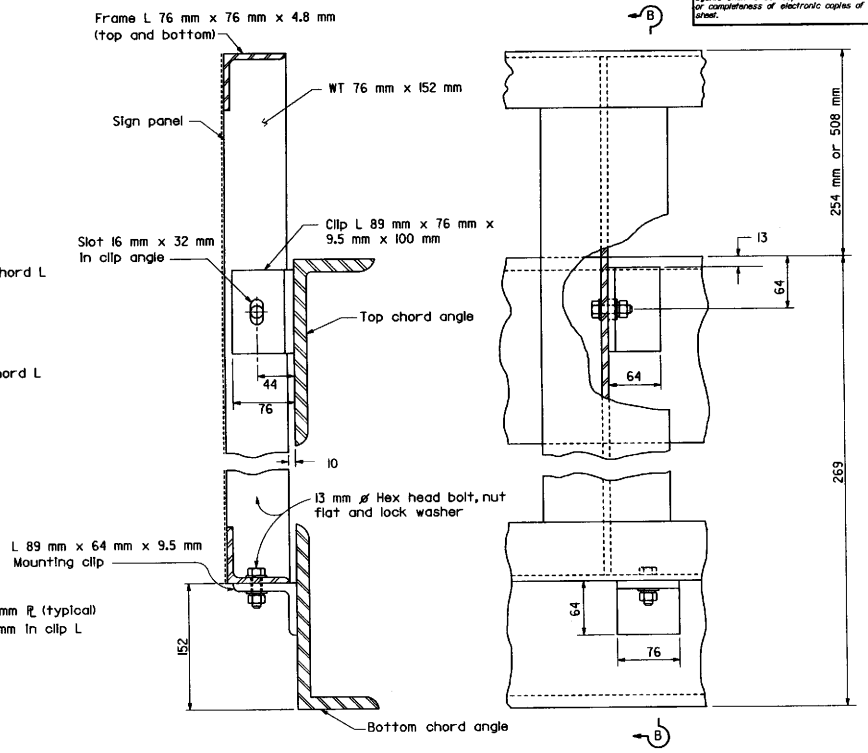

SECTION B-B

ELEVATION VIEW

STEEL REMOVABLE SIGN PANEL FRAMES

NOTES

1. For steel Removable Sign Panel Frame details see Standard Plan S8A.
2. Minimum fillet weld is 7 mm for clip angles welded to chord member of truss.
3. Maximum spacing of bottom clip angle is 1675 mm.
4. Top clips required for each vertical member or Removable Sign Panel Frame.

STATE OF CALIFORNIA
DEPARTMENT OF TRANSPORTATION

OVERHEAD SIGNS-TRUSS REMOVABLE SIGN PANEL FRAMES 2.794 m AND 3.048 m SIGN PANELS

NO SCALE

ALL DIMENSIONS ARE IN MILLIMETERS UNLESS OTHERWISE SHOWN

S8D

STD. PLAN S8D

Return to Table of Contents

DIST	COUNTY	ROUTE	KILOMETER POST TOTAL PROJECT	SHEET NO.	TOTAL SHEETS

Caltrans Metric

REGISTERED CIVIL ENGINEER

July 1, 1997
PLANS APPROVAL DATE

The State of California or its officers or agents shall not be responsible for the accuracy or completeness of electronic copies of this plan sheet.

REGISTERED PROFESSIONAL ENGINEER Jeffrey B. Woody No. C41260 Exp. 3-31-99 CIVIL STATE OF CALIFORNIA

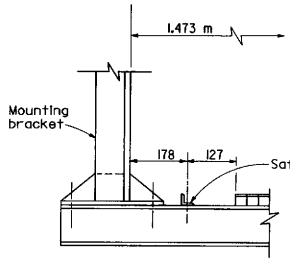

BRIDGE MOUNTED

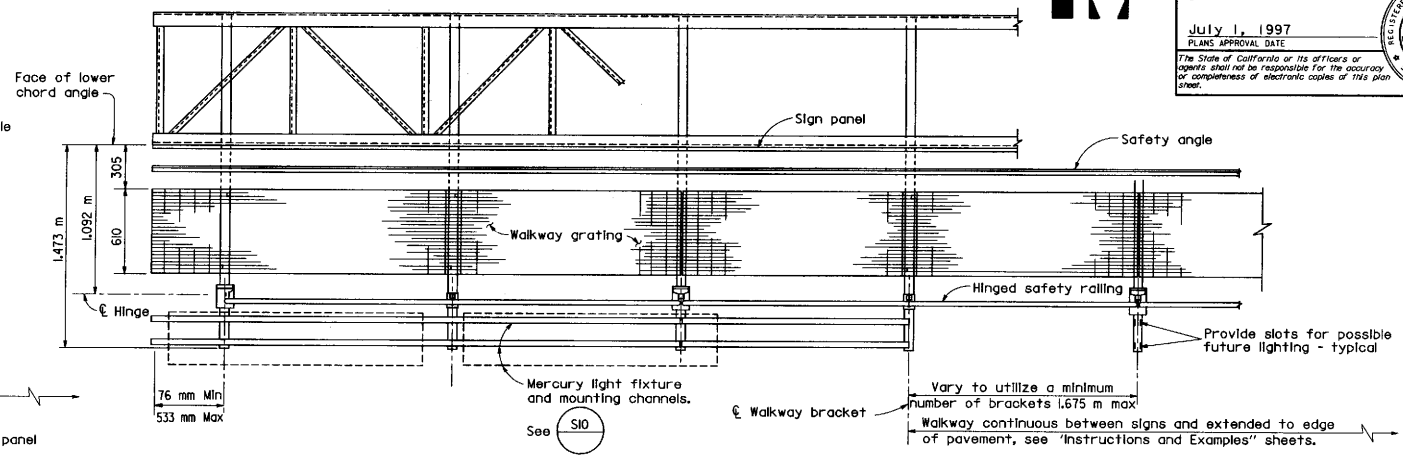

WALKWAY PLAN

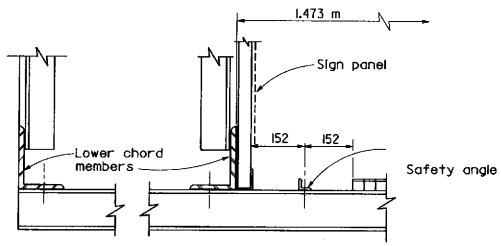

BOX BEAM
CLOSED TRUSS

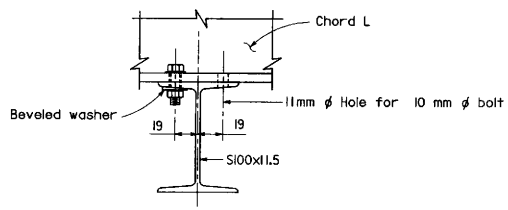

SECTION B-B

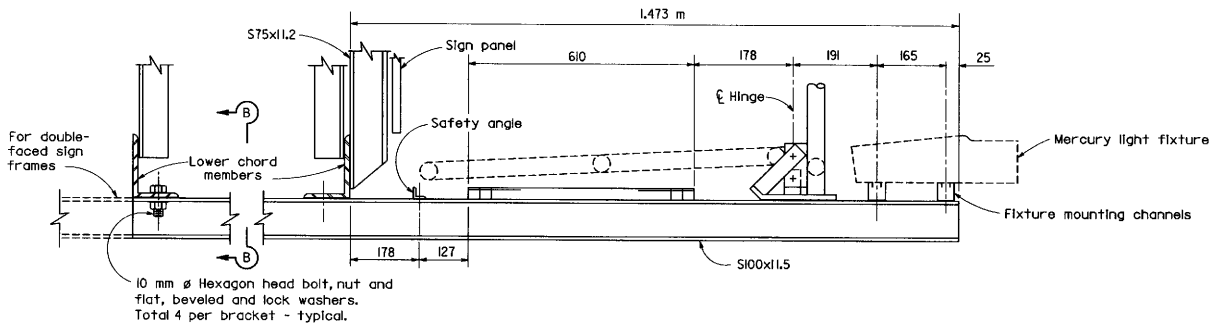

TRUSS

TYPICAL WALKWAY SECTION

NOTE

For spacing of lighting fixtures, see Standard Plan ES-29.

STATE OF CALIFORNIA
DEPARTMENT OF TRANSPORTATION

OVERHEAD SIGNS WALKWAY DETAILS NO.1

NO SCALE

ALL DIMENSIONS ARE IN MILLIMETERS UNLESS OTHERWISE SHOWN

S9

STD. PLAN S9

Return to Table of Contents

DIST	COUNTY	ROUTE	KILOMETER POST TOTAL PROJECT	SHEET NO.	TOTAL SHEETS

REGISTERED CIVIL ENGINEER

July 1, 1997
PLANS APPROVAL DATE

The State of California or its officers or agents shall not be responsible for the accuracy or completeness of electronic copies of this plan sheet.

REGISTERED PROFESSIONAL ENGINEER Jeffrey B. Woody No. C41260 Exp. 3-31-99 CIVIL STATE OF CALIFORNIA

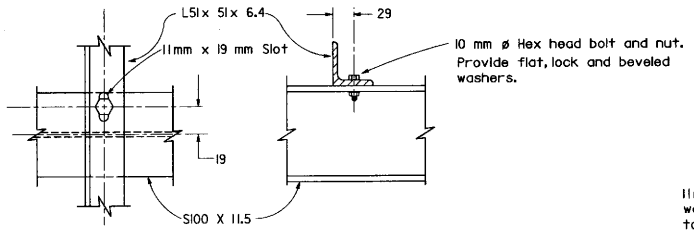

SAFETY ANGLE DETAILS

For bridge mounted signs

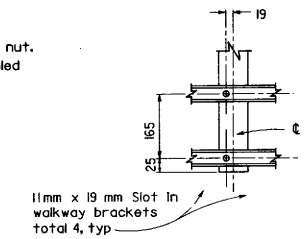

TYPICAL CONNECTION

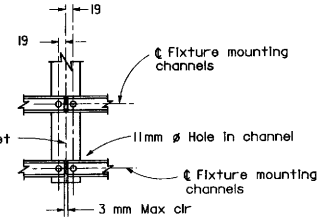

CONNECTION AT SPLICE

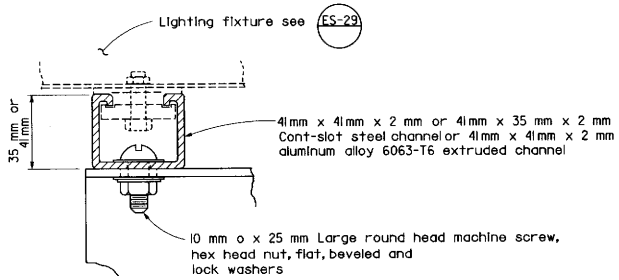

LIGHT FIXTURE MOUNTING CHANNEL DETAILS

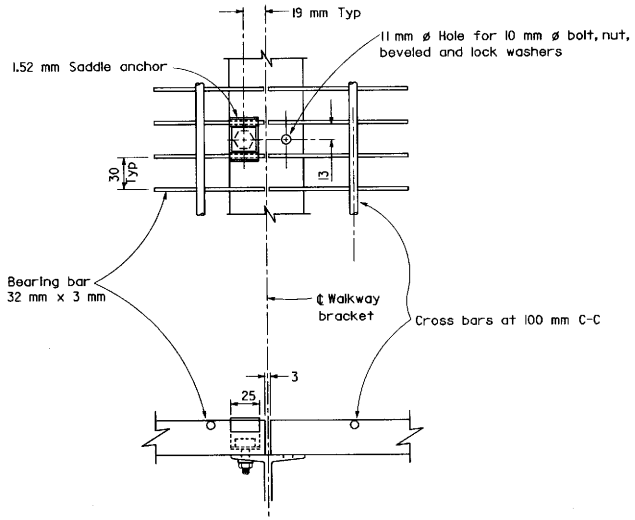

WALKWAY DETAILS

NOTES

1) Welded type grating shall have 32 mm x 3 mm bearing bars at 30 mm centers with 6 mm diameter (or equal) cross bars at 100 mm centers. If mechanical lock grating is used, it shall be equal in strength to the welded type. Alternate hold-down clips may be submitted for approval.

2) Walkway grating and light fixture mounting channels to be continuous (no splices) over as many walkway brackets as practicable consistent with fabrication, ease of handling and assembly.

STATE OF CALIFORNIA
DEPARTMENT OF TRANSPORTATION

OVERHEAD SIGNS WALKWAY DETAILS NO.2

NO SCALE

ALL DIMENSIONS ARE IN MILLIMETERS UNLESS OTHERWISE SHOWN

S10

STD. PLAN S10

Return to Table of Contents

DIST	COUNTY	ROUTE	KILOMETER POST TOTAL PROJECT	SHEET NO.	TOTAL SHEETS

Caltrans Metric

REGISTERED CIVIL ENGINEER

July 1, 1997
PLANS APPROVAL DATE

REGISTERED PROFESSIONAL ENGINEER Jeffrey B. Woody No. C41260 Exp. 3-31-99 CIVIL STATE OF CALIFORNIA

The State of California or its officers or agents shall not be responsible for the accuracy or completeness of electronic copies of this plan sheet.

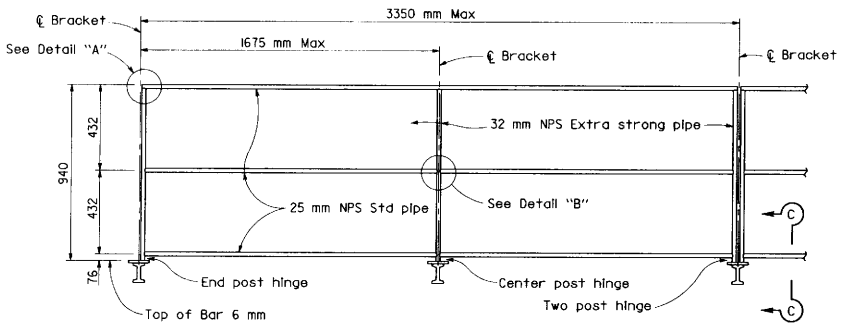

SAFETY RAILING ELEVATION

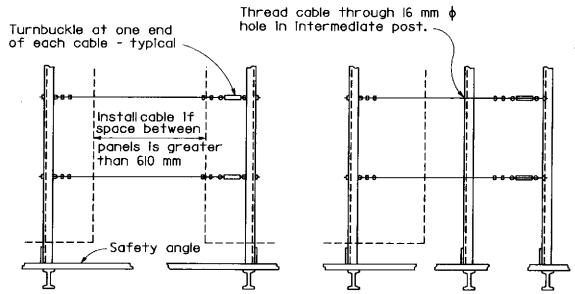

BETWEEN PANELS

BEYOND PANELS

SAFETY CABLE ELEVATION
FOR BRIDGE MOUNTED SIGNS

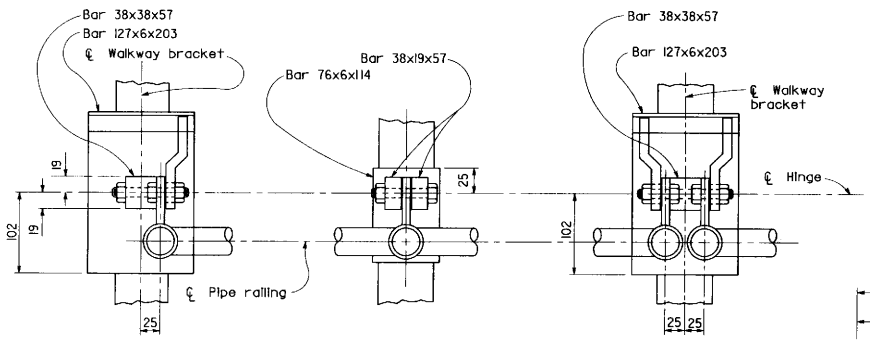

END POST

CENTER POST

TWO POST

HINGE - PLAN

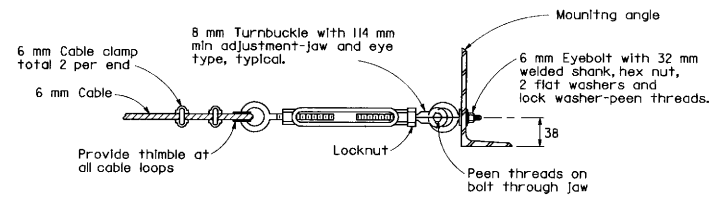

TURNBUCKLE DETAILS

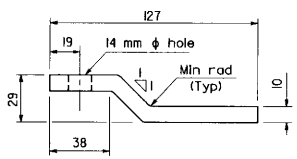

PLAN - KICKER BAR

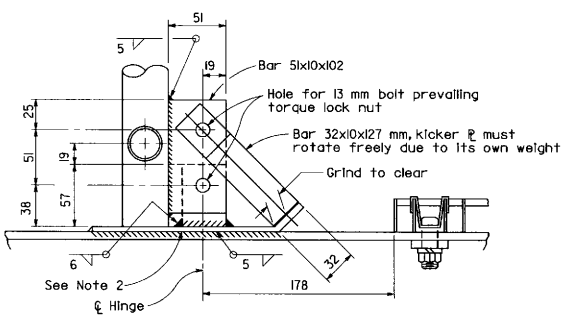

SECTION C-C

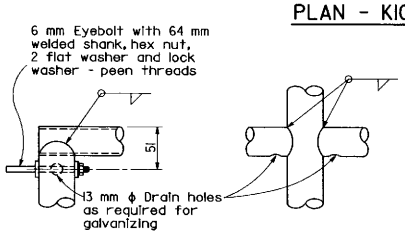

DETAIL A

DETAIL B

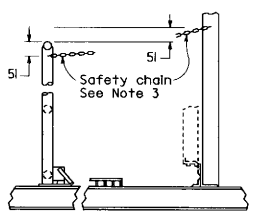

CHAIN ASSEMBLY

NOTES

Alternative venting methods may be used if approved by the Engineer.

NOTES

1. Special care shall be taken to insure that the complete hinge and latch assembly will hold the safety railing in a steady manner, free of wobble while in the raised position. Maximum allowable displacement from vertical at top of railing when latched shall be 25 mm.
2. Details for bolting hinge base plate to walkway bracket may be submitted for approval.
3. Safety chain shall be 5 mm galvanized steel coil chain, approximately 39.4 links per meter. Length shall be minimum which allows lock-up of safety railing.

STATE OF CALIFORNIA
DEPARTMENT OF TRANSPORTATION

OVERHEAD SIGNS WALKWAY SAFTEY RAILING DETAILS

NO SCALE

ALL DIMENSIONS ARE IN MILLIMETERS UNLESS OTHERWISE SHOWN

S11

STD. PLAN S11

Return to Table of Contents

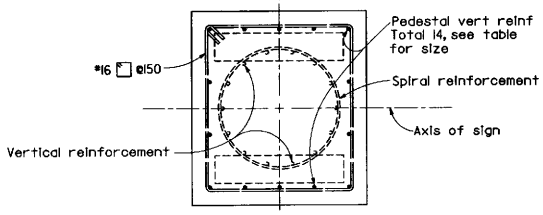

SECTION B-B

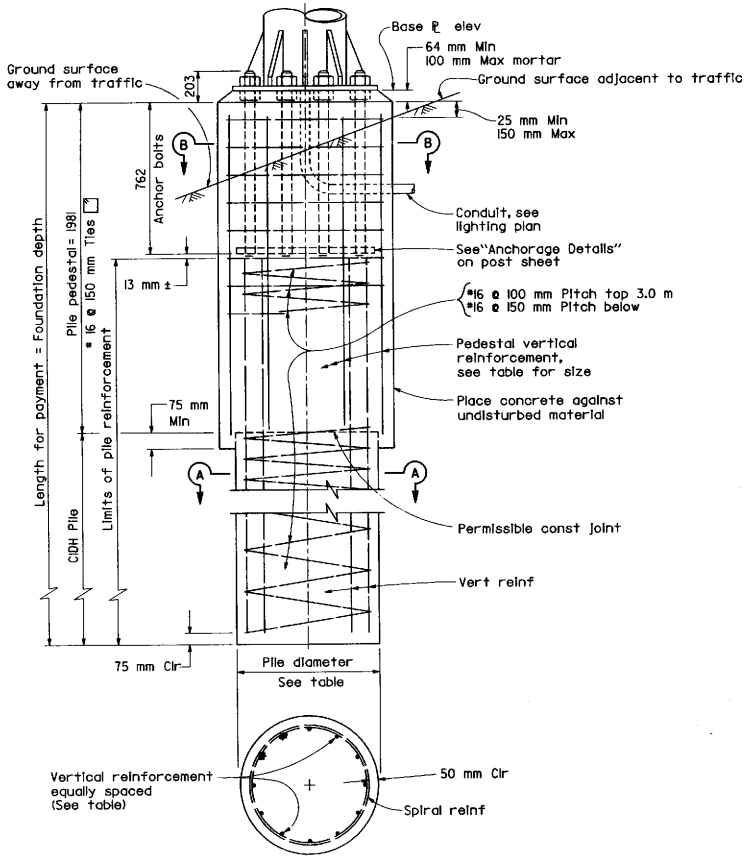

SECTION A-A

Post Type	Anchor Bolts	Pedestal Size (mm)	Reinforcing Steel Vertical	Pile Diameter (mm)	Foundation Depth ** (m)
II	6-51 mm ø	890x865	14-#22	760	4.0
III	6-51 mm ø	965x865	14-#25	760	4.0
IV	6-51 mm ø	1120x1020	16-#25	920	4.0
V	10-51 mm ø	1170x1095	16-#29	920	5.0
VI	10-51 mm ø	1170x1095	16-#32	920	5.5
VII	12-51 mm ø	1295x1195	16-#36	920	6.5
I-S	6-51 mm ø	865x865	14-#22	760	4.0
II-S	6-51 mm ø	940x865	14-#25	760	5.0
III-S	6-51 mm ø	1020x865	14-#32	760	5.5
IV-S	8-51 mm ø	1070x1020	16-#32	920	6.0
V-S	8-51 mm ø	1145x1020	16-#36	920	7.0
VI-S	8-51 mm ø	1245x1020	16-#36	920	7.0
VII-S	8-57 mm ø	1350x1195	*24-#36	920	8.0

** Use Foundation Depth shown in table unless otherwise shown on the Project Plans.

* Bundled bars

NOTES

1. For anchor bolt layout see post sheet.
2. For "Base ℞ elevation" see Project Plans.
3. Pedestal and pile shall be Class "A" PCC.
4. Pedestals and base plates, longer sides shall be normal to axis of sign.
5. Prior to erection of the post, backfill which is equivalent to the surrounding material shall be in place.
6. Pedestal shall be formed 150 mm minimum below ground surface. Remainder to be placed against undisturbed material.
7. Slope protection required when indicated on the Project Plans.
8. Foundation design is based on a lateral soil pressure of 86 MPa.

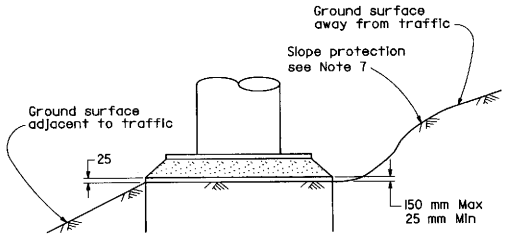

DETAIL C

DIST	COUNTY	ROUTE	KILOMETER POST TOTAL PROJECT	SHEET NO.	TOTAL SHEETS

REGISTERED CIVIL ENGINEER

July 1, 1997
PLANS APPROVAL DATE

The State of California or its officers or agents shall not be responsible for the accuracy or completeness of electronic copies of this plan sheet.

REGISTERED PROFESSIONAL ENGINEER Jeffrey B. Woody NO. C41260 EXP. 3-31-99 CIVIL STATE OF CALIFORNIA

STATE OF CALIFORNIA
DEPARTMENT OF TRANSPORTATION

OVERHEAD SIGNS-TRUSS PILE FOUNDATION

NO SCALE

ALL DIMENSIONS ARE IN MILLIMETERS UNLESS OTHERWISE SHOWN

S13

STD. PLAN S13

Return to Table of Contents

DIST	COUNTY	ROUTE	KILOMETER POST TOTAL PROJECT	SHEET NO.	TOTAL SHEETS

Caltrans Metric

REGISTERED CIVIL ENGINEER

July 1, 1997
PLANS APPROVAL DATE

REGISTERED PROFESSIONAL ENGINEER Jeffrey B. Woody No. C41260 Exp. 3-31-99 CIVIL STATE OF CALIFORNIA

The State of California or its officers or agents shall not be responsible for the accuracy or completeness of electronic copies of this plan sheet.

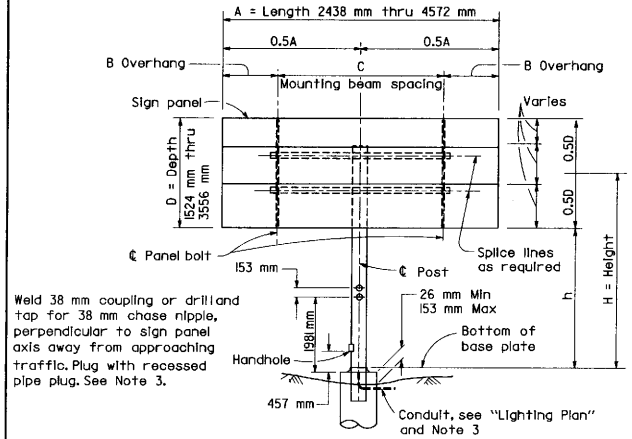

ELEVATION A

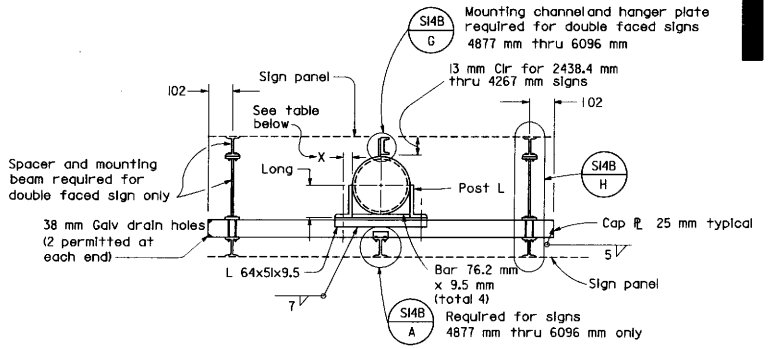

Sign Panel Length	Number Mounting Beams	Sign Panel Overhang	Mounting Beam Spacing	
A		B	C	E
1524	2	229	1066	
1829	2	305	1219	
2134	2	381	1372	
2438	2	457	1524	
2743	2	559	1625	
3048	2	610	1829	
3353	2	610	2134	
3657	2	762	2134	
3962	2	762	2438	
4267	2	762	2743	
4572	2	914.5	2743	
4877	3	152.5	2286	2286
5182	3	305	2286	2286
5486	3	305	2438	2438
5792	3	305	2591	2591
6096	3	457	2591	2591

MOUNTING BEAM SPACING

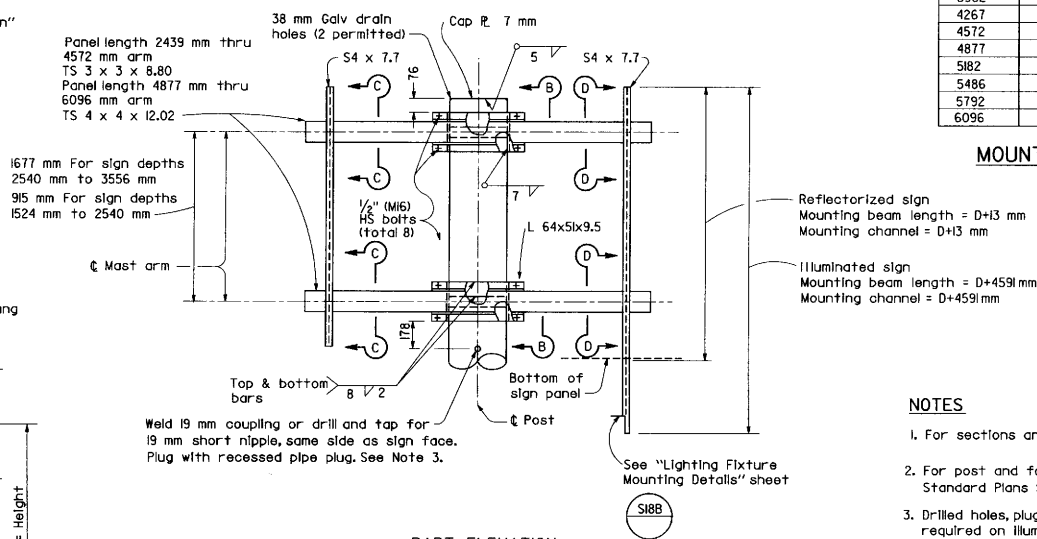

PART ELEVATION

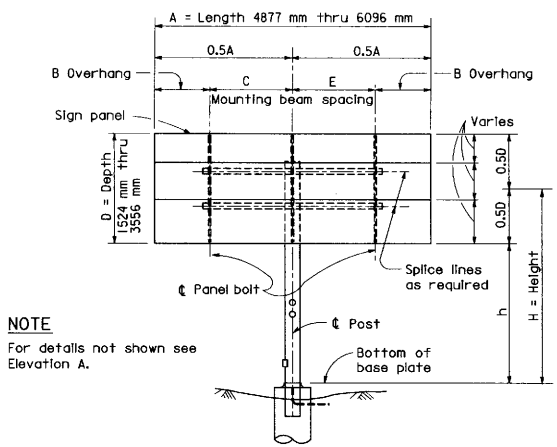

NOTE

For details not shown see Elevation A.

ELEVATION B

Post Size (Pipe)		Post Angles		
NPS	Min "t"	Angle	X (mm)	Weld (mm)
6	7.11	∠ 89x76x12.7	45	7
6	10.97	∠ 89x76x12.7	45	7
8	8.18	∠ 127x76x12.7	45	7
8	1.27	∠ 127x76x12.7	45	7
10	12.7	∠ 152x102x15.9	64	7
12	12.7	∠ 178x102x15.9	64	8
14	12.7	∠ 203x102x19.0	64	8
14	15.88	∠ 203x102x19.0	64	8

NOTES

1. For sections and detail not shown see S14B
2. For post and foundation details see Standard Plans S20A and S20B.
3. Drilled holes, plugs, conduit and handhole required on illuminated signs only.

STATE OF CALIFORNIA
DEPARTMENT OF TRANSPORTATION

OVERHEAD SIGNS-LIGHTWEIGHT BALANCED-SINGLE STEEL POST CONNECTION AND MOUNTING DETAILS

NO SCALE

ALL DIMENSIONS ARE IN MILLIMETERS UNLESS OTHERWISE SHOWN

S14A

STD. PLAN S14A

Return to Table of Contents

DIST	COUNTY	ROUTE	KILOMETER POST TOTAL PROJECT	SHEET NO.	TOTAL SHEETS

Caltrans Metric

REGISTERED CIVIL ENGINEER

July 1, 1997
PLANS APPROVAL DATE

REGISTERED PROFESSIONAL ENGINEER Jeffrey B. Woody No. C41260 EXP. 3-31-99 CIVIL STATE OF CALIFORNIA

The State of California or its officers or agents shall not be responsible for the accuracy or completeness of electronic copies of this plan sheet.

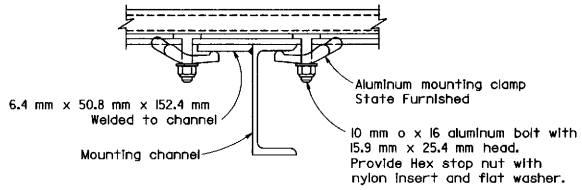

DETAIL K

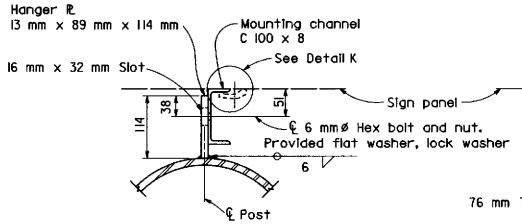

DETAIL G

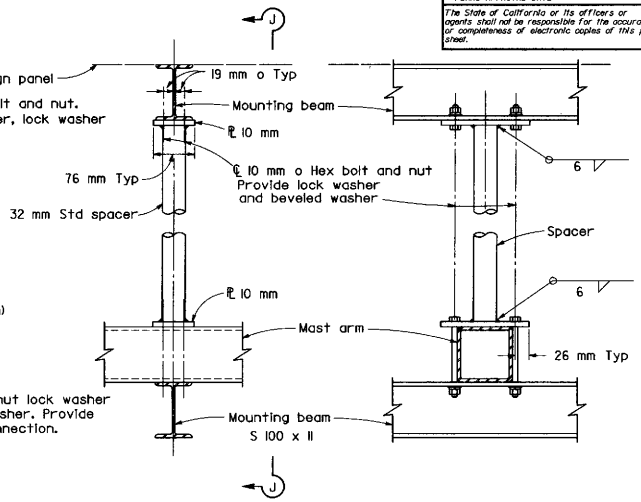

DETAIL H

VIEW J-J

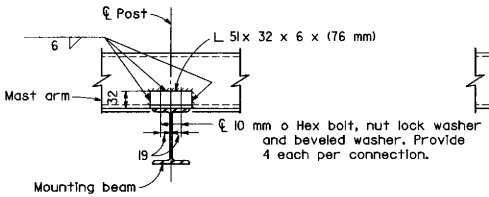

DETAIL A

NOTE Spacer required for double faced sign only.

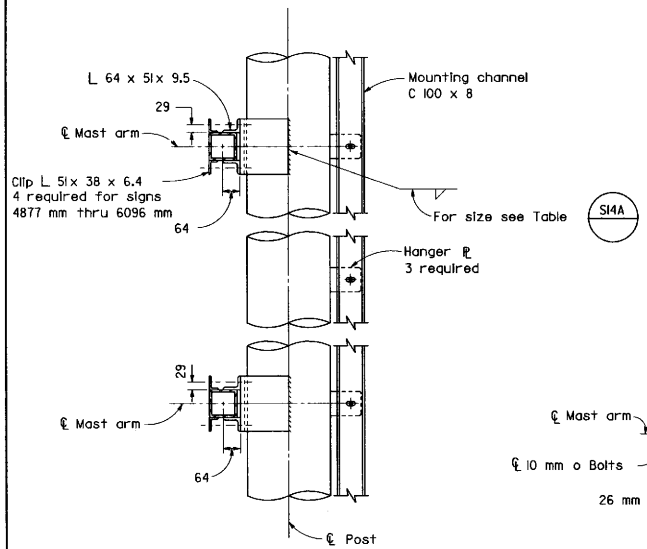

SECTION B-B

NOTE Mounting channel and hanger ℞ required for double faced signs 4877 mm thru 6096 mm only.

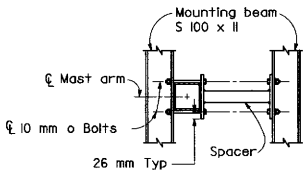

SECTION C-C

NOTE Typical end mount for double faced signs.

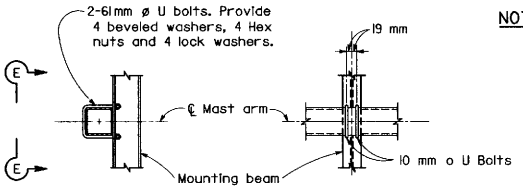

SECTION D-D

VIEW E-E

NOTE Typical connection to single faced signs.

NOTE For sections and details not shown see S14A

STATE OF CALIFORNIA
DEPARTMENT OF TRANSPORTATION

OVERHEAD SIGNS-LIGHTWEIGHT BALANCED-SINGLE STEEL POST DETAILS

NO SCALE

ALL DIMENSIONS ARE IN MILLIMETERS UNLESS OTHERWISE SHOWN

S14B

STD. PLAN S14B

Return to Table of Contents

DIST	COUNTY	ROUTE	KILOMETER POST TOTAL PROJECT	SHEET NO.	TOTAL SHEETS

REGISTERED CIVIL ENGINEER

July 1, 1997
PLANS APPROVAL DATE

Jeffrey B. Woody No. C41260 Exp. 3-31-99 CIVIL STATE OF CALIFORNIA REGISTERED PROFESSIONAL ENGINEER

The State of California or its officers or agents shall not be responsible for the accuracy or completeness of electronic copies of this plan sheet.

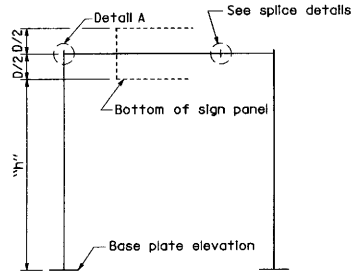

SINGLE CROSS BEAM SERIES
TYPE A-1

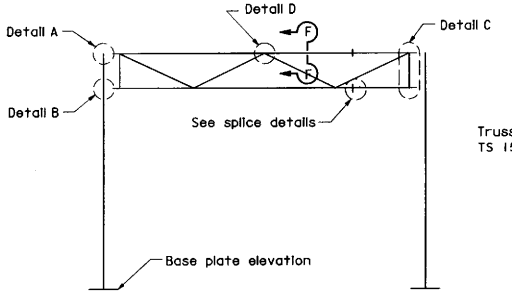

TRUSS CROSS BEAM SERIES
TYPE A-2

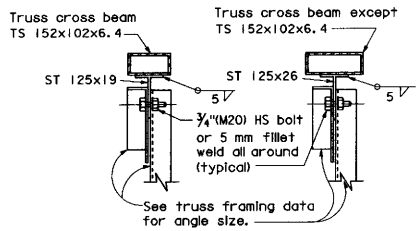

SECTION F-F

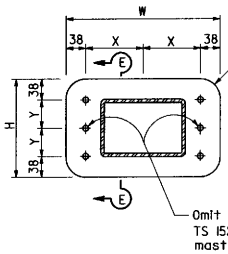

END VIEW

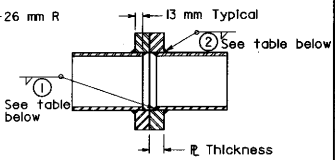

SECTION E-E

SPLICE DETAILS

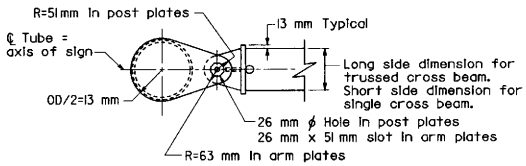

PLAN

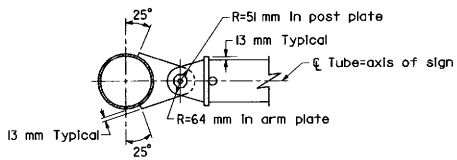

PLAN

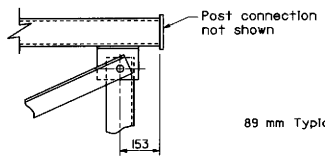

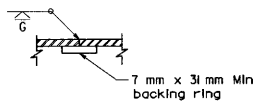

OPTIONAL
WELDED SPLICE

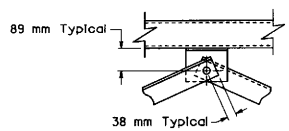

DETAIL D

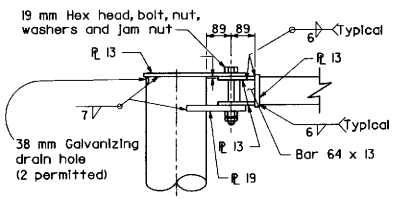

DETAIL A

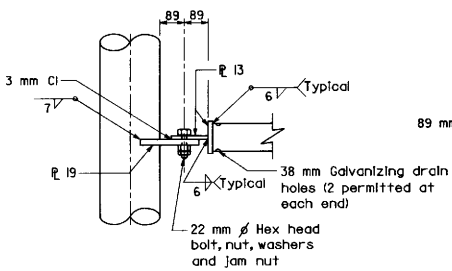

DETAIL B

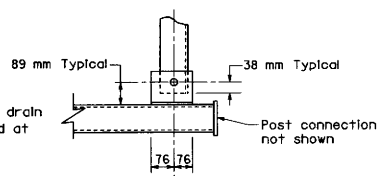

DETAIL C

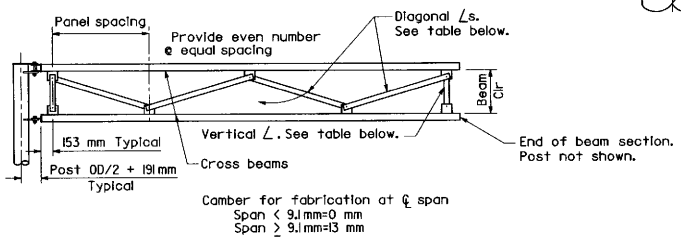

Camber for fabrication at ℄ span
Span < 9.1mm=0 mm
Span ≥ 9.1mm=13 mm

TRUSS FRAMING DATA

SIGN DEPTH (mm)	BEAM CLEARANCE (m)	MAXIMUM PANEL SPACING (m)	VERTICAL ANGLE (mm)	DIAGONAL ANGLE (mm)
1016-1778	0.6	1.7	∠89x64x6.4 *	∠89x64x6.4 *
2032-2540	1.4	2.0	∠89x64x6.4 *	∠89x64x6.4 *

* Short leg outstanding.

SPLICE DATA

TUBULAR CROSS BEAM SIZE (mm)	HIGH STRENGTH BOLTS				A-36 PLATES (mm)			WELDING	
	NO.	SIZE	X (mm)	Y (mm)	W (mm)	H (mm)	THICKNESS	1	2
TS 152x102x6.4	4	3/4" (M20)	108	51	292.1	178	25.4	5	8
TS 203x102x6.4	6	3/4" (M20)	133	51	342.9	178	25.4	5	8
TS 203x152x6.4	6	3/4" (M20)	133	64	342.9	203	29	5	10
TS 203x152x9.5	6	3/4" (M20)	108	89	292.1	254	29	7	8
TS 254x152x6.4	6	3/4" (M20)	165	64	406.4	203	35	5	10
TS 254x152x9.5	6	3/4" (M20)	165	76	406.4	229	41	8	13

NOTE

For post connection to base ℄ see S20A/A

For cross beam to sign panel connections see S18A

See Format sheet for:

1. Sign type and location.
2. Panel type and location on structure.
3. Post size and dimension "h".
4. Cross beam size.
5. Foundation type.
6. Illumination if required.

STATE OF CALIFORNIA
DEPARTMENT OF TRANSPORTATION

OVERHEAD SIGNS-LIGHTWEIGHT TYPE A CONNECTION DETAILS

NO SCALE

ALL DIMENSIONS ARE IN MILLIMETERS UNLESS OTHERWISE SHOWN

S15

STD. PLAN S15

Return to Table of Contents

DIST	COUNTY	ROUTE	KILOMETER POST TOTAL PROJECT	SHEET NO.	TOTAL SHEETS

Caltrans Metric

REGISTERED CIVIL ENGINEER

July 1, 1997
PLANS APPROVAL DATE

REGISTERED PROFESSIONAL ENGINEER Jeffrey B. Woody No. C41260 Exp. 3-31-99 CIVIL STATE OF CALIFORNIA

The State of California or its officers or agents shall not be responsible for the accuracy or completeness of electronic copies of this plan sheet.

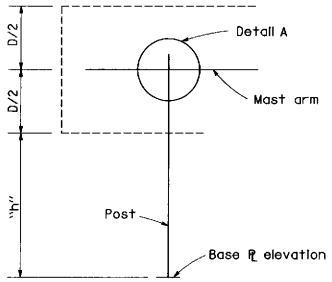

SINGLE ARM SERIES
TYPE B-1

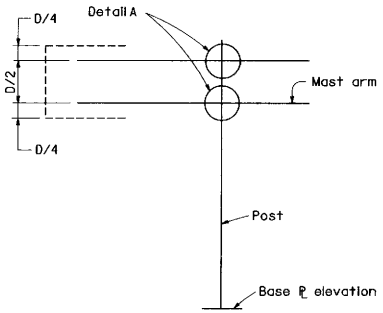

DOUBLE ARM SERIES
TYPE B-2

POST ANGLES			
POST SIZE	ANGLE	X (mm)	WELD (mm)
6	L102 x 76 x 12.7	45	7
8	L127 x 76 x 12.7	45	7
10	L152 x 102 x 15.9	64	7
12	L178 x 102 x 15.9	64	8
14	L203 x 102 x 19.0	64	8

MAST ARM ANGLES				
ARM SIZE	ANGLE (mm)	HS BOLT	Y (mm)	WELD (mm)
TS 76 x 76 x 6.4	L51 x 51 x 9.5	1/2" (M16)	29	7
TS 102 x 102 x 6.4	L64 x 51 x 9.5	1/2" (M16)	29	7
TS 127 x 127 x 6.4	L76 x 64 x 9.5	5/8" (M16)	35	7
TS 152 x 152 x 6.4	L89 x 64 x 9.5	5/8" (M16)	35	7
TS 178 x 178 x 6.4	L102 x 76 x 1.27	3/4" (M20)	45	8
TS 203 x 203 x 6.4	L127 x 76 x 12.7	7/8" (M22)	45	8
TS 254 x 254 x 6.4	L152 x 102 x 15.9	7/8" (M22)	64	8

POST TO ARM FRAMING DATA

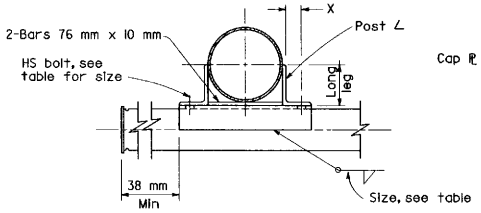

SECTION D-D

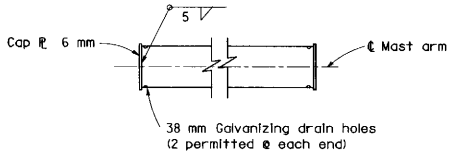

MAST ARM

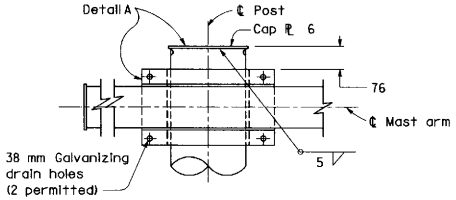

POST CAP

END DETAIL

SEE OTHER PLAN SHEETS FOR

1. Sign type and location
2. Panel type and location on structure
3. Post size and dimension "h".
4. Mast arm size.
5. Foundation type.
6. Illumination if required.

NOTES

For post connection to base plate see S20A

For mast arm length and mast arm-to-sign panel connections see S18A

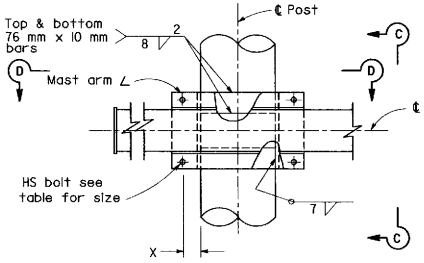

DETAIL A

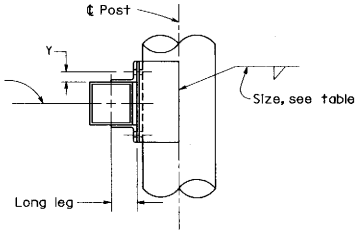

VIEW C-C

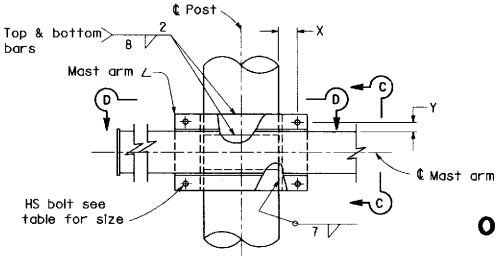

DETAIL B

STATE OF CALIFORNIA
DEPARTMENT OF TRANSPORTATION

OVERHEAD SIGNS-LIGHTWEIGHT TYPE B CONNECTION DETAILS

NO SCALE

ALL DIMENSIONS ARE IN MILLIMETERS UNLESS OTHERWISE SHOWN

S16

STD. PLAN S16

Return to Table of Contents

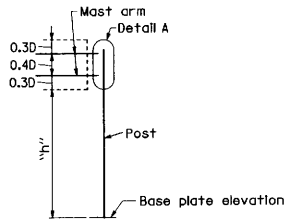

DOUBLE MAST ARM SERIES
TYPE C-1

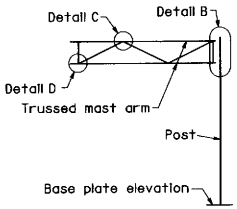

TRUSSED MAST ARM SERIES
TYPE C-2

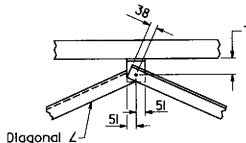

DETAIL C

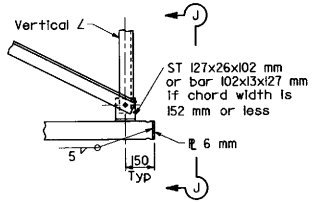

DETAIL D

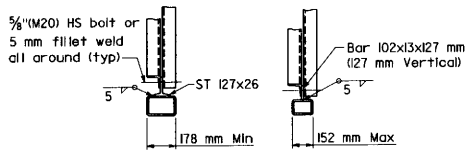

VIEW J-J

POST ANGLES			
POST SIZE	ANGLE (mm)	X (mm)	WELD (mm)
6	∠127x76x12.7	44	7
8	∠152x102x15.9	57	7
10	∠178x102x15.9	57	7
12	∠203x102x19.0	57	8
14	∠203x102x19.0	57	8

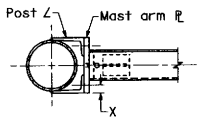

SECTION G-G

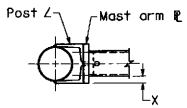

SECTION F-F

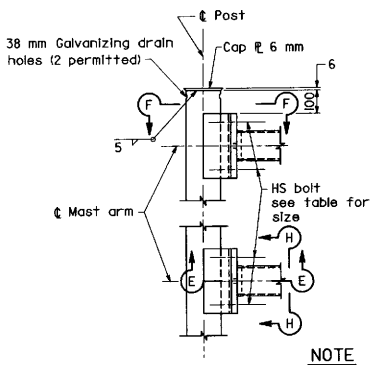

DETAIL A

NOTE
"T" equals vertical dimension of mast arm.

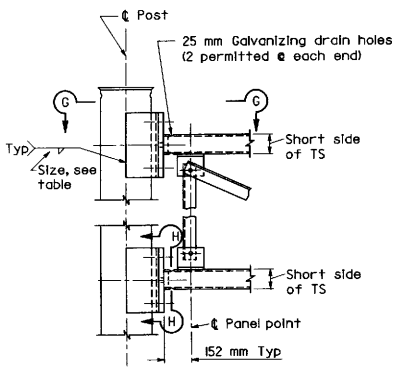

DETAIL B

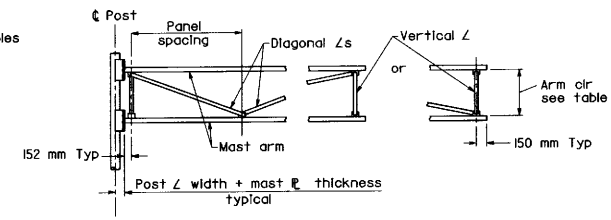

SIGN DEPTH (mm)	ARM CLEARANCE (mm)	MAX PANEL SPACING (mm)	VERTICAL ANGLE (mm)	DIAGONAL ANGLE (mm)
D=1016-1778	610	1321	51x51x6.4	51x51x6.4
D=2032-2540	914	1981	89x64x6.4*	89x64x6.4*

*Short leg outstanding

TRUSS FRAMING DATA

MAST ARM PLATE			
TWO ARMS	TRUSSED ARMS	PLATE (mm)	H.S. BOLT
TS 76x76x6.4		19.1	1/2" (M16)
TS 102x102x6.4		25.4	5/8" (M16)
TS 127x127x6.4		25.4	3/4" (M20)
TS 152x152x6.4		25.4	3/4" (M20)
TS 178x178x6.4	TS 127x76x9.5	32	3/4" (M20)
	TS 152x102x9.5	32	7/8" (M22)
	TS 178x127x9.5	32	7/8" (M22)
	TS 203x152x9.5	32	7/8" (M22)
	TS 254x152x9.5	32	1" (M27)

POST TO ARM FRAMING DATA

NOTES

For post connection to base ℄ see S20A

For mast arm length and mast-arm-to sign panel connections see S18A

See other plan sheets for:
1. Sign type and location.
2. Panel type and location on structure.
3. Post size and dimension "h".
4. Mast arm size.
5. Foundation type.
6. Illumination if required.

For General Notes see S20A

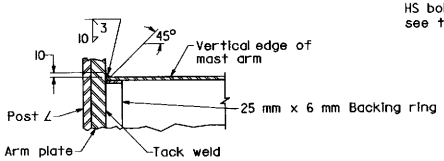

SECTION E-E

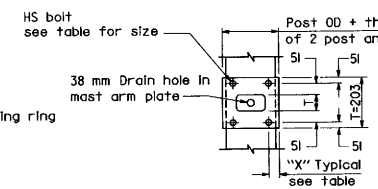

SECTION H-H

NOTE
"T" equals vertical dimension of mast arm.

Bottom connection shown.
Top similar.

DIST	COUNTY	ROUTE	KILOMETER POST TOTAL PROJECT	SHEET NO.	TOTAL SHEETS

California Metric

REGISTERED CIVIL ENGINEER

July 1, 1997
PLANS APPROVAL DATE

Jeffrey B. Woody
No. C41260
Exp. 3-31-99
CIVIL
STATE OF CALIFORNIA
REGISTERED PROFESSIONAL ENGINEER

The State of California or its officers or agents shall not be responsible for the accuracy or completeness of electronic copies of this plan sheet.

STATE OF CALIFORNIA
DEPARTMENT OF TRANSPORTATION

OVERHEAD SIGNS-LIGHTWEIGHT TYPE C CONNECTION DETAILS

NO SCALE

ALL DIMENSIONS ARE IN MILLIMETERS UNLESS OTHERWISE SHOWN

S17

STD. PLAN S17

Return to Table of Contents

DIST	COUNTY	ROUTE	KILOMETER POST TOTAL PROJECT	SHEET NO.	TOTAL SHEETS

REGISTERED CIVIL ENGINEER

July 1, 1997
PLANS APPROVAL DATE

Jeffrey B. Woody
No. C41260
Exp. 3-31-99
CIVIL
STATE OF CALIFORNIA

The State of California or its officers or agents shall not be responsible for the accuracy or completeness of electronic copies of this plan sheet.

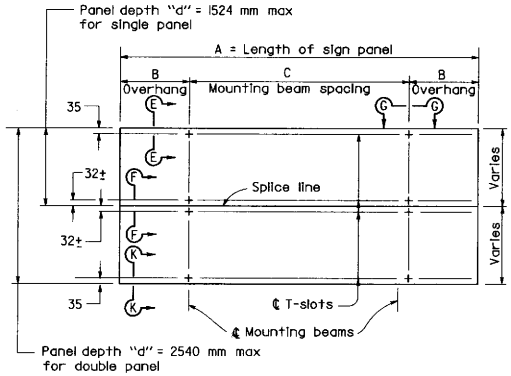

SIGN PANEL LENGTH 1524 mm TO 4572 mm

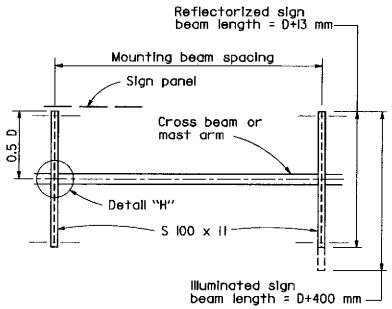

SINGLE BEAM OR ARM SERIES

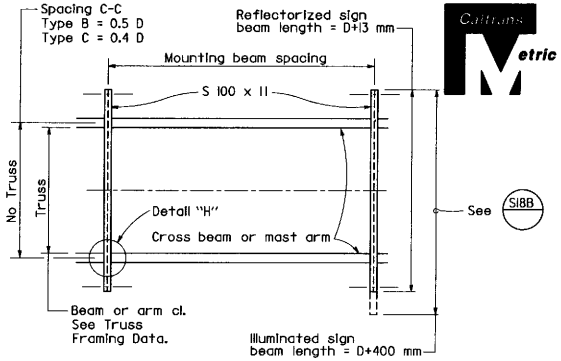

DOUBLE BEAM OR ARM SERIES

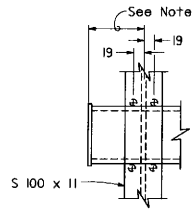

END ARM DETAIL
SINGLE POST SIGNS

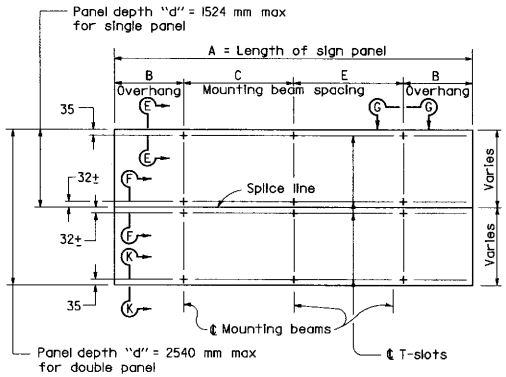

SIGN PANEL LENGTH 4877 mm TO 7315 mm*

ELEVATION

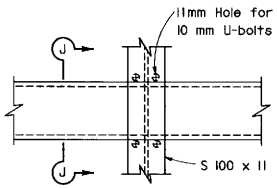

DETAIL H

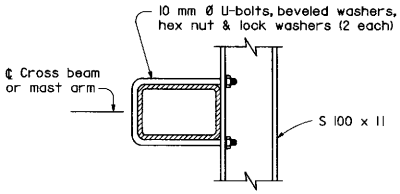

SECTION J-J

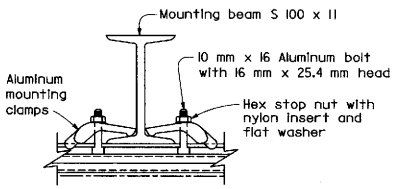

VIEW G-G

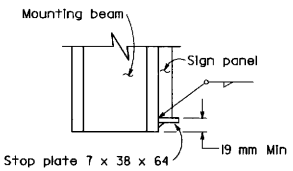

SECTION K-K

Sign Panel Length *	Number Mounting Beams	Sign Panel Overhang	Mounting Beam Spacing	
A (mm)		B (mm)	C (mm)	E (mm)
1524	2	229	1066	
1829	2	305	1219	
2134	2	381	1372	
2438	2	457	1524	
2743	2	559	1625	
3048	2	610	1829	
3353	2	610	2134	
3657	2	762	2134	
3962	2	762	2438	
4267	2	762	2743	
4572	2	914.5	2743	
4877	3	152.5	2286	2286
5182	3	305	2286	2286
5486	3	305	2438	2438
5792	3	305	2591	2591
6096	3	457	2591	2591
6400	3	457	2743	2743
6706	3	610	2743	2743
7010	3	762	2743	2743
7315	3	914.5	2743	2743

*Signs longer than 7315 mm are fabricated and mounted as adjoining single panels.

MOUNTING BEAM SPACING

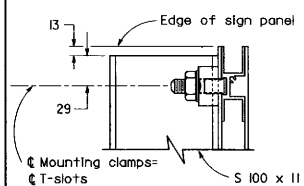

SECTION E-E

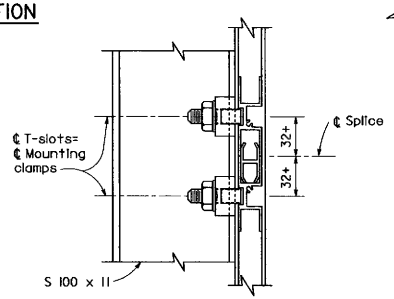

SECTION F-F

NOTES

1. Laminated panel sign depths more than 1500 mm requires additional mounting clamps located 32 mm± each side of panel splice line. Exact location is dependent on sign panel manufacturer.
2. Position sign panel so that mounting beams will clear truss connections and arm to post joints. Where interference cannot be avoided, 13 mm Ø holes to pass the 10 mm Ø U-bolts may be drilled through mast arm angles or truss connection members as necessary.
3. Torque aluminum sign panel mounting bolt to 11.6 mm/N.
4. 300 mm for Type C-1 and C-2. Others 102 mm.
5. A stop plate is required at each mounting beam under sign panel.

STATE OF CALIFORNIA
DEPARTMENT OF TRANSPORTATION

OVERHEAD SIGNS-LIGHTWEIGHT SIGN PANEL MOUNTING DETAILS LAMINATED PANEL-TYPE A

NO SCALE

ALL DIMENSIONS ARE IN MILLIMETERS UNLESS OTHERWISE SHOWN

S18A

Return to Table of Contents

DIST	COUNTY	ROUTE	KILOMETER POST TOTAL PROJECT	SHEET NO.	TOTAL SHEETS

REGISTERED CIVIL ENGINEER

July 1, 1997
PLANS APPROVAL DATE

REGISTERED PROFESSIONAL ENGINEER Jeffrey B. Woody No. C41260 Exp. 3-31-99 CIVIL STATE OF CALIFORNIA

The State of California or its officers or agents shall not be responsible for the accuracy or completeness of electronic copies of this plan sheet.

Metric

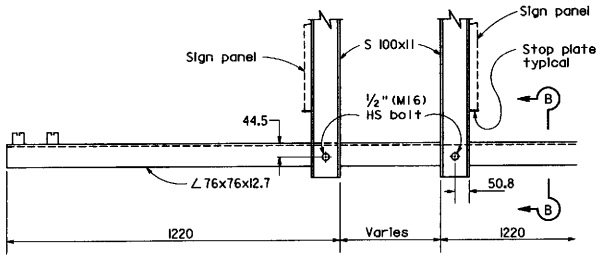

SIDE VIEW - DOUBLE FACED SIGN - END MOUNT

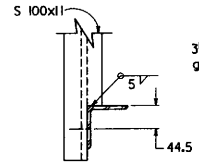

PART SECTION B-B

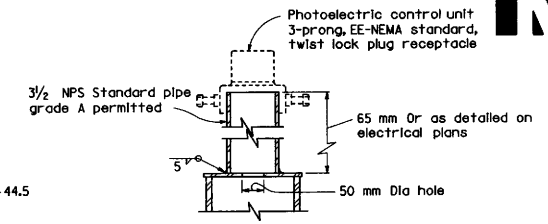

PHOTOELECTRIC CONTROL UNIT

NOTE

For details not shown see "Side View - Single Faced Sign Type A,B&C" details.

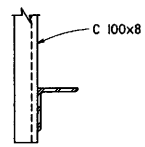

PART SECTION A-A

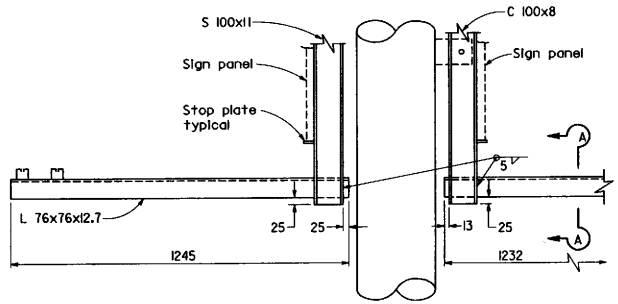

SIDE VIEW - DOUBLE FACED SIGN - CENTER MOUNT

(Required only on balanced single post signs 4.875 m thru 7.315 m)

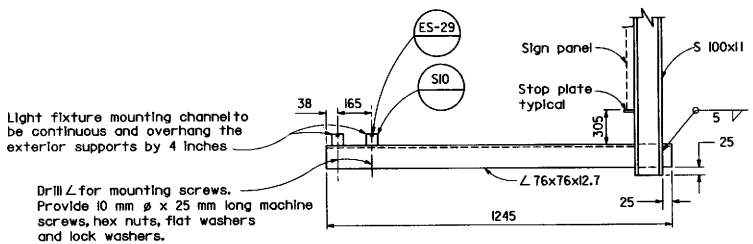

SIDE VIEW - SINGLE FACED SIGN TYPES A,B & C

LIGHT FIXTURE MOUNTING DETAIL

SIGNS GREATER THAN 1676 mm IN LENGTH

For signs 1676 mm or less in length see sheet for "Fluorescent Sign Lighting Equipment (915 mm)"

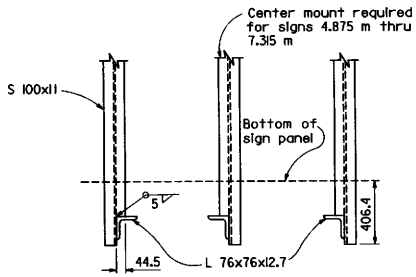

FRONT VIEW

STATE OF CALIFORNIA
DEPARTMENT OF TRANSPORTATION

OVERHEAD SIGN-LIGHTWEIGHT LIGHT FIXTURE MOUNTING DETAILS

NO SCALE

ALL DIMENSIONS ARE IN MILLIMETERS UNLESS OTHERWISE SHOWN

S18B

STD. PLAN S18B

Return to Table of Contents

DIST	COUNTY	ROUTE	KILOMETER POST TOTAL PROJECT	SHEET NO.	TOTAL SHEETS

REGISTERED CIVIL ENGINEER

July 1, 1997
PLANS APPROVAL DATE

REGISTERED PROFESSIONAL ENGINEER Jeffrey B. Woody No. C41260 Exp. 3-31-99 CIVIL STATE OF CALIFORNIA

The State of California or its officers or agents shall not be responsible for the accuracy or completeness of electronic copies of this plan sheet.

California Metric

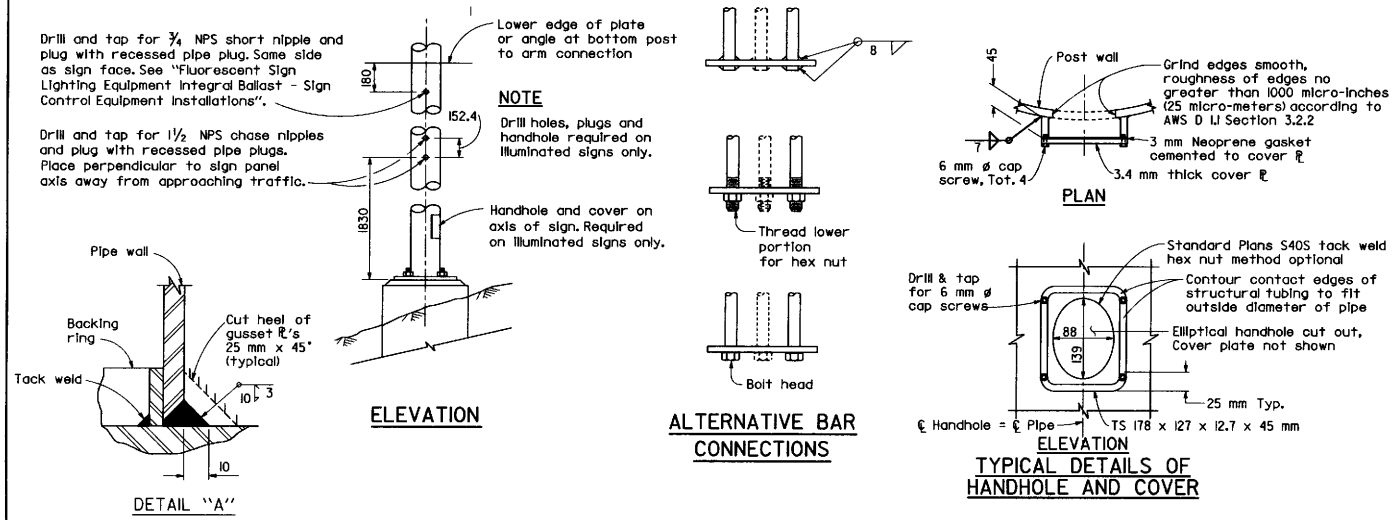

NOTE

Drill holes, plugs and handhole required on illuminated signs only.

ELEVATION

DETAIL "A"

ALTERNATIVE BAR CONNECTIONS

PLAN

ELEVATION

TYPICAL DETAILS OF HANDHOLE AND COVER

Post Size		Base Plate (mm)	Anchor Bolts	
NPS	"t" (mm)		#	Bolt ø
6	7.11	38 x 360 x 360	4	32 mm
6	10.97	38 x 360 x 360	4	38 mm
8	8.18	38 x 460 x 460	4	45 mm
8	12.7	51 x 460 x 460	4	51 mm
10	12.7	51 x 510 x 510	4	57 mm
12	12.7	51 x 510 x 510	4	64 mm
14	12.7	51 x 715 x 715	6	51 mm
14	15.88	51 x 715 x 715	6	57 mm

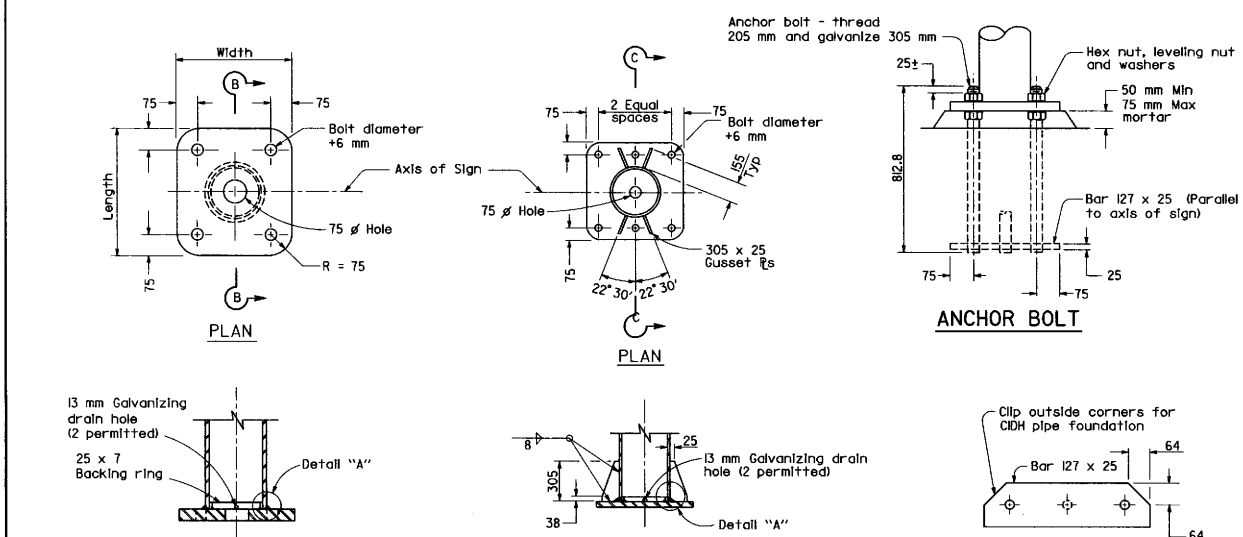

PLAN

PLAN

ANCHOR BOLT

SECTION B-B
6 NPS THRU 12 NPS POSTS

SECTION C-C
14 NPS POST

BAR PLAN

BASE PLATE DETAILS

ANCHORAGE DETAILS

NOTES

1. Footing shall be placed with long dimensions normal to axis of sign.
2. On single post signs the post shall be raked out of plumb with the use of the leveling nuts to make the bottom of the sign frame level.
3. 51mm ø anchor bolts may be substituted for 45 mm ø bolts. 64 mm ø anchor bolts may be substituted for 57 mm ø bolts.

GENERAL NOTES

DESIGN: AASHTO Standard Specifications for Structural Supports for Highway Signs, Luminaires and Traffic Signals, dated 1994.

CONSTRUCTION: Standard Specifications and the special provision.

WELDING: All welding continuous unless otherwise noted on the plans. All welding to be done in accordance with the Standard Specifications.

STATE OF CALIFORNIA
DEPARTMENT OF TRANSPORTATION

OVERHEAD SIGNS-LIGHTWEIGHT POST DETAILS

NO SCALE

ALL DIMENSIONS ARE IN MILLIMETERS UNLESS OTHERWISE SHOWN

S20A

STD. PLAN S20A

Return to Table of Contents

POST SIZE		PILE FOUNDATION				SPREAD FOOTING				
NPS	"t" (mm)	Pedestal (mm)	Pile Dia (mm)	Found Depth (m)	Vertical Reinf	Pedestal (mm)	Footing (mm)	Reinforcement Top	Bottom	L Bar
6	7.11		610	2.5	#16	560 x 560	1250 x 1830	#16	#16	#16
6	10.97		610	2.8	#16	560 x 560	1250 x 3150	#16	#16	#16
8	8.18		760	2.8	#19	660 x 660	1550 x 2450	#16	#16	#16
8	12.7		760	3.4	#22	660 x 660	1850 x 2750	#16	#16	#16
10	12.7	870 x 870	760	4.0	#25	715 x 715	2150 x 3050	#16	#25	#25
12	12.7	870 x 870	760	4.6	#32	715 x 715	2150 x 3700	#19	#25	#25
14	12.7	1020 x 1020	920	4.0	#32	900 x 900	2150 x 4000	#25	#29	#25
14	15.88	1020 x 1020	920	4.9	#32	900 x 900	2450 x 4300	#25	#29	#25

NOTES

1. Backfill shall be in place prior to erection of post.
2. Slope protection required when indicated on the plans.
3. Pile pedestal shall be formed 150 mm minimum below ground surface. Remainder to be placed against undisturbed material.

Caltrans Metric

DIST	COUNTY	ROUTE	KILOMETER POST TOTAL PROJECT	SHEET NO.	TOTAL SHEETS

REGISTERED CIVIL ENGINEER

July 1, 1997
PLANS APPROVAL DATE

REGISTERED PROFESSIONAL ENGINEER Jeffrey B. Woody No. C41260 Exp. 3-31-99 CIVIL STATE OF CALIFORNIA

The State of California or its officers or agents shall not be responsible for the accuracy or completeness of electronic copies of this plan sheet.

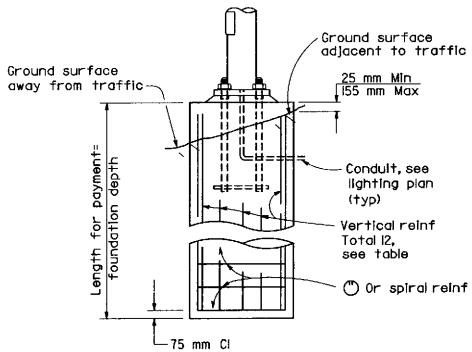

ELEVATION

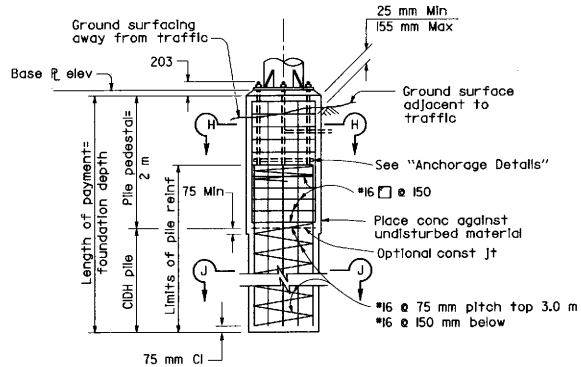

ELEVATION

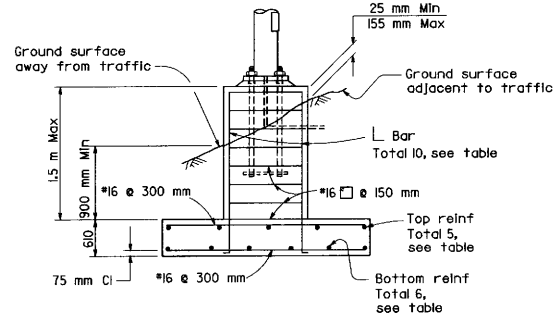

ELEVATION

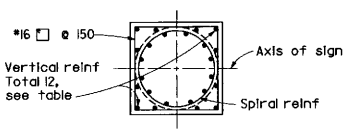

SECTION H-H

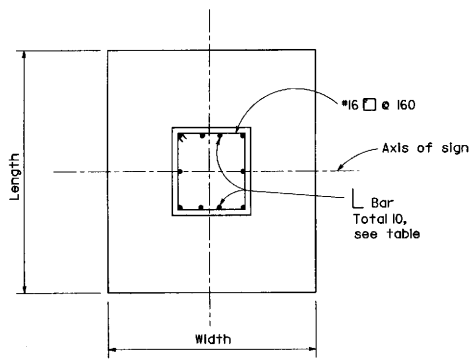

PLAN

SPREAD FOOTING

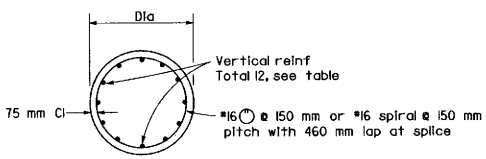

PLAN

6 NPS & 8 NPS POSTS

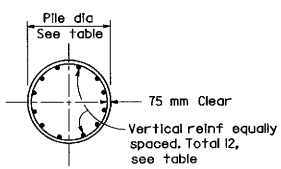

SECTION J-J

10 NPS THRU 14 NPS POSTS

PILE FOUNDATION

STATE OF CALIFORNIA
DEPARTMENT OF TRANSPORTATION

OVERHEAD SIGNS-LIGHTWEIGHT FOUNDATION DETAILS

NO SCALE

ALL DIMENSIONS ARE IN MILLIMETERS UNLESS OTHERWISE SHOWN

S20B

STD. PLAN S20B

Return to Table of Contents

DIST	COUNTY	ROUTE	KILOMETER POST TOTAL PROJECT	SHEET NO.	TOTAL SHEETS

REGISTERED CIVIL ENGINEER

July 1, 1997
PLANS APPROVAL DATE

The State of California or its officers or agents shall not be responsible for the accuracy or completeness of electronic copies of this plan sheet.

REGISTERED PROFESSIONAL ENGINEER Jeffrey B. Woody No. C41260 Exp. 3-31-99 CIVIL STATE OF CALIFORNIA

Caltrans Metric

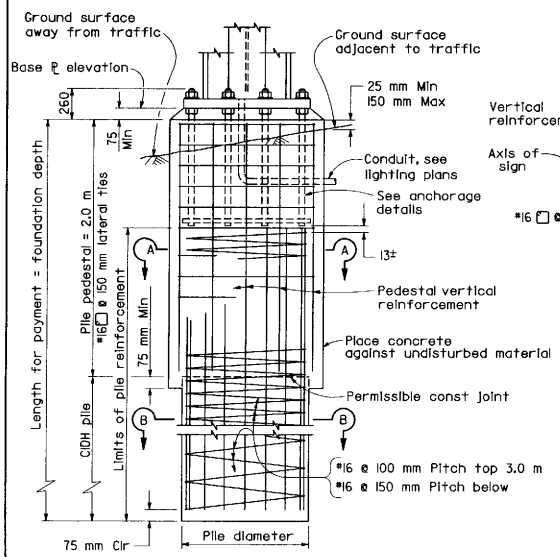

ELEVATION

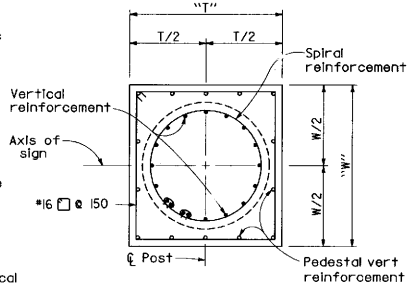

SECTION A-A

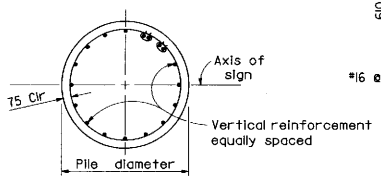

SECTION B-B

PILE FOUNDATION

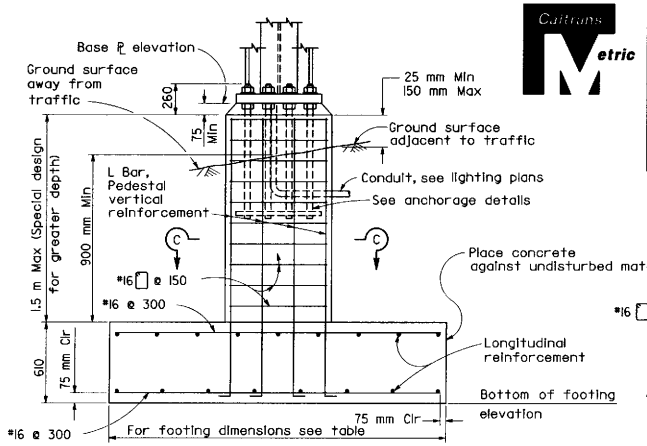

ELEVATION

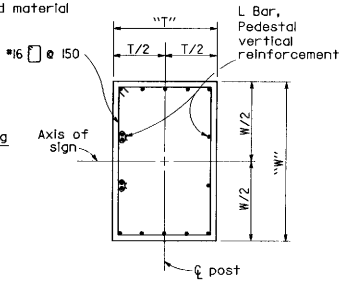

SECTION C-C

SPREAD FOOTING

TWO POST TYPE

Post Type	Pedestal Size "T" x "W" (m) x (m)	Pile Foundation: Vertical Reinf	Pile Dia (mm)	Foundation Depth (mm)	Pedestal Vert Reinf	Spread Footing: Footing Dimension (m)	Top Reinf Longit	Top Reinf Transv	Bottom Reinf Longit	Bottom Reinf Transv
A-1	1050 x 1250	16-#25	920	4.3	14-#22	2.2 x 4.9	7-#16	#16 @ 300	6-#29	#16 @ 300
A-2		16-#29		4.9	14-#25	2.5 x 5.2	10-#16		10-#29	
A-3		16-#36		6.1	14-#29	2.5 x 5.5	8-#19		9-#36	
A-4		*24-#36		6.4	14-#29	2.5 x 6.1	8-#25		11-#36	
A-5		*24-#36		6.4	14-#32	2.5 x 6.1	8-#25		11-#36	
B-1	1.05 x 1.35	*16-#36		6.1	14-#25	2.5 x 5.5	8-#19		9-#36	
B-2	1.05 x 1.35	*24-#36		6.7	14-#29	2.5 x 6.1	10-#19		11-#36	
B-3	1.05 x 1.40	*28-#36		7.4	14-#32	2.5 x 6.4	7-#25		13-#36	
B-4	1.20 x 1.40	*24-#36	1070	6.7	14-#32	2.5 x 6.7	7-#25		14-#36	
B-5	1.20 x 1.40	*24-#36	1070	7.0	14-#32	2.5 x 7.1	8-#25		15-#36	
C-1	1.05 x 1.05	16-#29	920	4.9	14-#22	2.2 x 4.9	6-#19		7-#36	
C-2	1.05 x 1.15	16-#36		5.8	14-#29	2.5 x 5.2	8-#19		9-#36	
C-3	1.05 x 1.15	*24-#36		6.4	14-#32	2.5 x 5.8	9-#19		11-#36	
C-4	1.05 x 1.15	*28-#36		7.4	14-#32	2.5 x6.4	7-#25		13-#36	
C-5	1.20 x 1.20	*24-#36	1070	6.7	14-#36	2.5 x 6.7	8-#25		15-#36	
C-6		*24-#36		7.0	14-#36	2.5 x 7.1	8-#25		16-#36	
C-7		*28-#36		7.4	14-#36	2.5 x 7.1	8-#25		12-#43	
C-8		*34-#36		7.6	*28-#32	2.5 x 7.4	9-#25		13-#43	
D-1	1.05 x 1.25	*24-#36	920	6.4	14-#29	2.5 x 5.8	9-#19		10-#36	
D-2	1.05 x 1.30	*28-#36	920	7.4	14-#32	2.5 x 6.4	7-#25		13-#36	
D-3	1.20 x 1.30	*24-#36	1070	7.4	14-#36	2.5 x 7.1	8-#25		16-#36	
D-4		*34-#36		8.3	14-#36	2.5 x 7.1	8-#25		18-#36	
D-5		*34-#36		9.1	*28-#32	2.5 x 7.7	9-#25		14-#43	
D-6	1.30 x 1.40	*34-#36		9.1	14-#36	2.5 x 8.0	10-#25		14-#43	
D-7		*34-#36		9.1	14-#36	2.5 x 8.0	10-#25	#16 @ 300	15-#43	#16 @ 300

* Bundled bars

SINGLE POST TYPE

Post Type	Pedestal Size "T" x "W" (m) x (m)	Pile Foundation: Vertical Reinf	Pile Dia (mm)	Foundation Depth (m)	Pedestal Vert Reinf	Spread Footing: Footing Dimension (m)	Top Reinf Longit	Top Reinf Transv	Bottom Reinf Longit	Bottom Reinf Transv
E-1	1.02 x 1.12	16-#25	920	4.0	14-#25	2.5x 4.5	6-#16	#16 @ 300	9-#22	#16 @ 300
E-2	1.02 x 1.12	16-#29		4.6	14-#29	2.8 x 4.6	6-#19		9-#29	
E-3	1.12 x 1.12	16-#32		5.5	14-#32					
E-4	1.12 x 1.12	16-#36		6.1	14-#36					
F-1	1.02 x 1.12	16-#25		4.0	14-#22	2.5 x 4.0	8-#16	#16 @ 300	10-#22	#16 @ 300
F-2		16-#29		4.6	14-#22	2.5 x 4.6	8-#16		11-#25	
F-3		16-#29		4.9	14-#25	2.5 x 4.9	9-#16		10-#29	
F-4		16-#36		5.8	14-#29	2.5 x 5.8	6-#19		10-#36	
F-5		16-#36		6.7	14-#32	24.5 x 6.1	10-#19	#16 @ 300	12-#36	#16 @ 300

NOTES

1. Base plates, pedestals and footings; longer sides shall be normal to axis of sign.
2. For anchor bolt layout see Standard Plans S40F and S40J.
3. For base plate elevation see Format sheet.
4. Prior to erection of the post, backfill which is equivalent to the surrounding material shall be in place.
5. Pile pedestal shall be formed 150 mm minimum below ground surface. Remainder to be placed against undisturbed material.
6. Pile footing - use foundation depth shown in table unless otherwise shown on Format sheet.
7. On single post sign structures the post shall be raked out of plumb with the use of the levelling nuts to make the bottom of the sign frame level.

STATE OF CALIFORNIA
DEPARTMENT OF TRANSPORTATION

OVERHEAD SIGNS-BOX BEAM CLOSED TRUSS FOUNDATION DETAILS

NO SCALE

ALL DIMENSIONS ARE IN MILLIMETERS UNLESS OTHERWISE SHOWN

S39

Return to Table of Contents

DIST	COUNTY	ROUTE	KILOMETER POST TOTAL PROJECT	SHEET NO.	TOTAL SHEETS

REGISTERED CIVIL ENGINEER

July 1, 1997
PLANS APPROVAL DATE

REGISTERED PROFESSIONAL ENGINEER Jeffrey B. Woody No. C41260 Exp. 3-31-99 CIVIL STATE OF CALIFORNIA

The State of California or its officers or agents shall not be responsible for the accuracy or completeness of electronic copies of this plan sheet.

California Metric

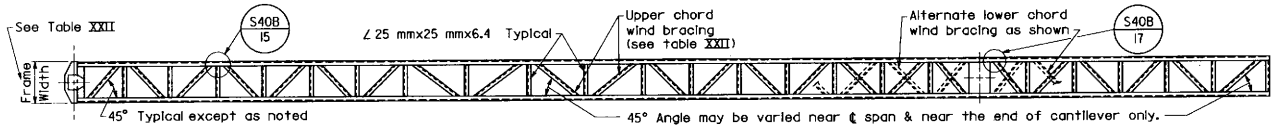

PLAN

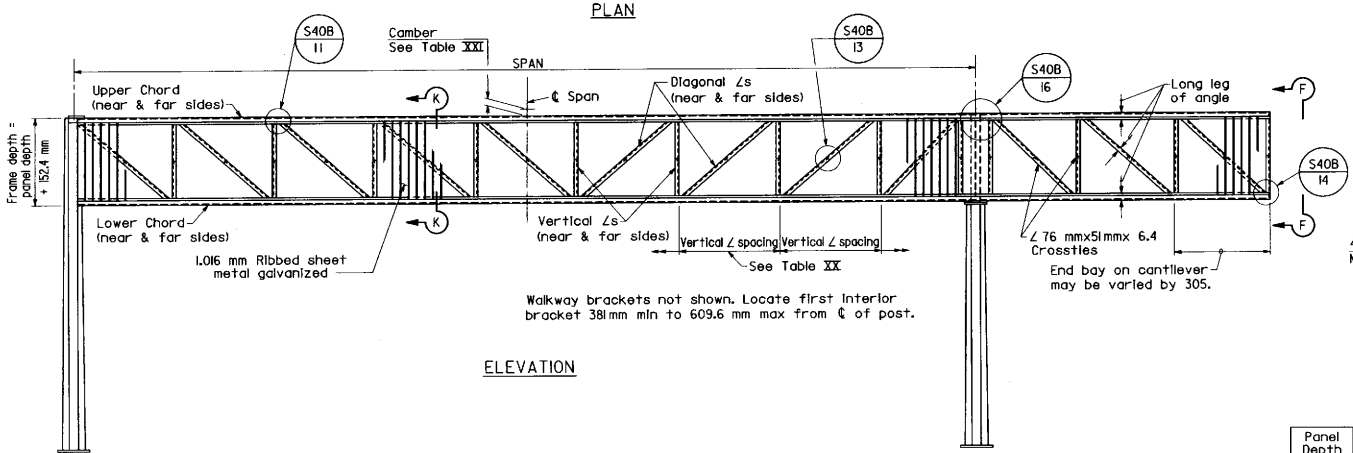

ELEVATION

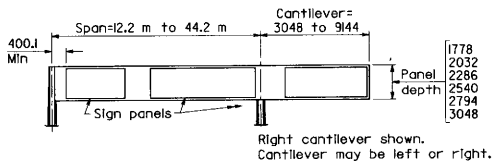

RANGE OF STRUCTURE SIZES

Panel Depth (mm)	Frame Depth (mm)	Max Vertical ∠ Spacing (mm)
1778	1931	1829
2032	2185	1829
2286	2439	2286
2540	2693	2286
2794	2947	3048
3048	3201	3048

NOTES

1. Frame widths shown are nominal. These widths may be varied by 6 mm to standardize fabrication methods.
2. For View F-F see S40D
3. For Section K-K see S40B
4. For Foundation details see S39
5. For General Notes see S1

TABLE XX

Fabrication Camber At ℄ Span	
Span (m)	Camber (mm)
12.2 to 21.3	25
21.6 to 30.5	45
30.8 to 36.6	57
36.9 to 44.2	70

Camber of cantilever arm = + 13 mm for arms greater than 3048 mm.
Camber to approximate parabola.

TABLE XXI

Span (m)	1778 mm Panel Depth					2032 mm Panel Depth					2286 mm Panel Depth				
	Frame Width (mm)	Chord L's	Vertical L's	Diagonal L's	Wind Bracing L's	Frame Width (mm)	Chord L's	Vertical L's	Diagonal L's	Wind Bracing L's	Frame Width (mm)	Chord L's	Vertical L's	Diagonal L's	Wind Bracing L's
12.2-15.2	610	127x76x11.11	76x76x7.9	76x76x6.4	38x38x6.4	610	127x76x11.1	76x76x7.9	76x76x6.4	38x38x6.4	610	127x76x11.1	76x76x7.9	76x76x7.9	38x38x6.4
15.6-18.3		127x76x11.1					127x76x11.1					127x76x11.1			
18.56-21.3		127x76x11.1					127x76x11.1					127x76x11.1			
21.6-24.4		127x76x11.1					127x76x11.1					127x89x12.7			
24.7-27.4		127x89x12.7					127x89x12.7					127x89x12.7			
27.7-30.5		127x89x15.9					127x89x15.9					127x89x15.9			
30.8-33.55		152x102x14.3					152x102x14.3					152x102x14.3			
33.8-36.6		152x102x15.9					152x102x15.9					152x102x15.9			
36.9-40.2		178x102x19.0				762	178x102x15.9			51x51x6.4	762	178x102x15.9			51x51x6.4
40.5-44.2	762	178x102x19.0			51x51x6.4	762	178x102x19.0			51x51x6.4	762	178x102x19.0			51x51x6.4

Span (m)	2540 mm Panel Depth					2794 mm Panel Depth					3048 mm Panel Depth				
	Frame Width (mm)	Chord L's	Vertical L's	Diagonal L's	Wind Bracing L's	Frame Width (mm)	Chord L's	Vertical L's	Diagonal L's	Wind Bracing L's	Frame Width (mm)	Chord L's	Vertical L's	Diagonal L's	Wind Bracing L's
12.2-15.2	610	127x76x11.1	76x76x7.9	76x76x7.9	38x38x6.4	610	127x76x11.1	89x89x7.9	89x89x7.9	38x38x6.4	610	127x76x11.1	89x89x7.9	101.6x89x7.9	38x38x6.4
15.6-18.3		127x76x11.1					127x76x11.1					127x76x11.1			
18.6-21.3		127x76x11.1					127x76x11.1					127x89x12.7			
21.6-24.4		127x89x12.7					127x89x15.9					127x89x15.9			
24.7-27.4		127x89x15.9					152x102x14.3					152x102x14.3			
27.7-30.5		152x102x14.3					152x102x14.3					178x102x15.9			
30.8-33.5		152x102x15.9					178x102x15.9					178x102x19.0			51x51x6.4
33.8-36.6		178x102x19.0				762	178x102x15.9			51x51x6.4	762	203x102x19.0			51x51x6.4
36.9-40.2	762	178x102x19.0			51x51x6.4	762	178x102x19.0			51x51x6.4	762	203x102x19.0			51x51x6.4
40.5-44.2	762	203x102x19.0			51x51x6.4	762	203x102x22.2			51x51x6.4	762	203x102x22.2			51x51x6.4

TABLE XXII

STATE OF CALIFORNIA
DEPARTMENT OF TRANSPORTATION

OVERHEAD SIGNS-BOX BEAM CLOSED TRUSS-TWO POST TYPE FRAME MEMBERS

NO SCALE

ALL DIMENSIONS ARE IN MILLIMETERS UNLESS OTHERWISE SHOWN

S40A

STD. PLAN S40A

Return to Table of Contents

DIST	COUNTY	ROUTE	KILOMETER POST TOTAL PROJECT	SHEET NO.	TOTAL SHEETS

REGISTERED CIVIL ENGINEER

July 1, 1997
PLANS APPROVAL DATE

The State of California or its officers or agents shall not be responsible for the accuracy or completeness of electronic copies of this plan sheet.

REGISTERED PROFESSIONAL ENGINEER Jeffrey B. Woody No. C41260 Exp. 3-31-99 CIVIL STATE OF CALIFORNIA

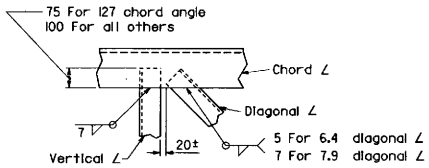

DETAIL 11

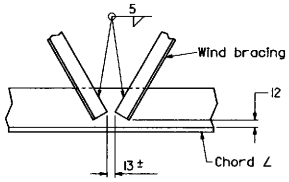

DETAIL 12

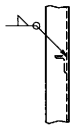

DETAIL 13

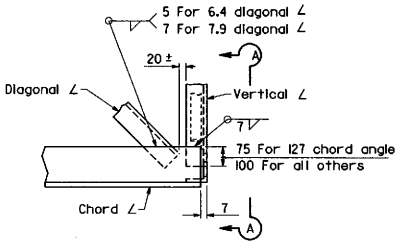

DETAIL 14

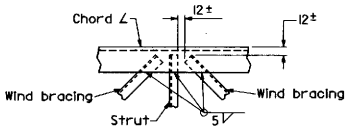

DETAIL 15

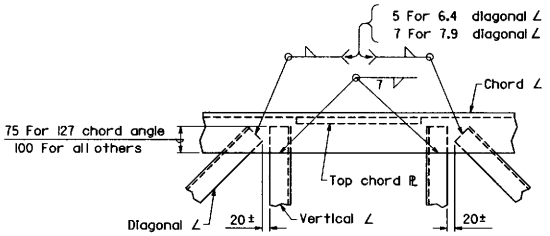

DETAIL 16

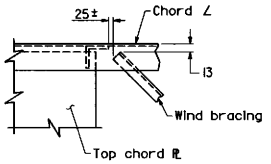

DETAIL 17

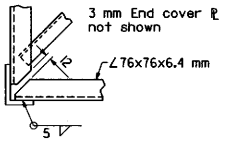

SECTION A-A

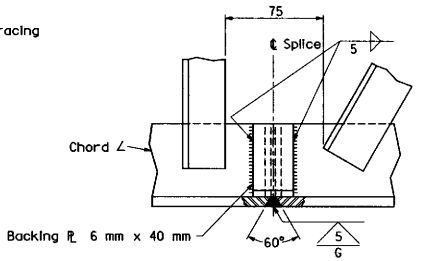

SPLICE NOTES

1. The splice shall be located so as not to interfere with mounting the walkway brackets.
2. Alternative splice details may be used if approved by the Engineer.

WELD CHORD SPLICE

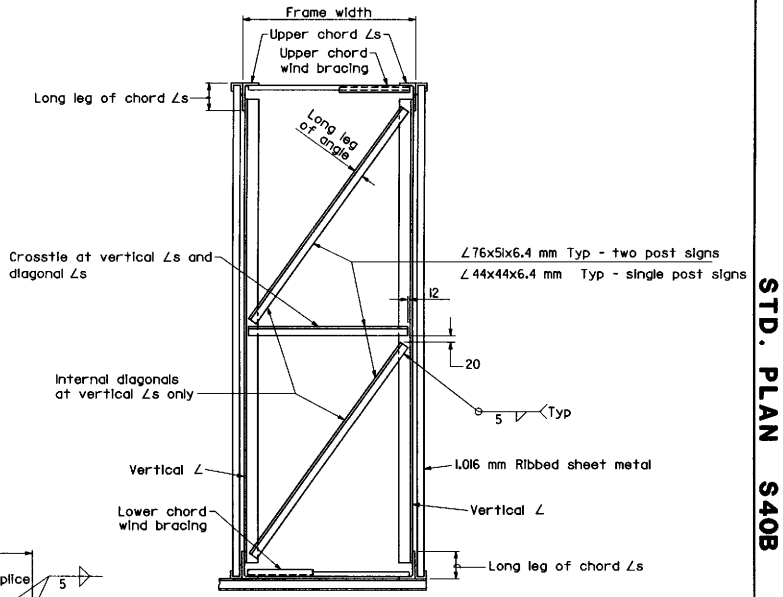

TYPICAL SECTION K-K

STATE OF CALIFORNIA
DEPARTMENT OF TRANSPORTATION

OVERHEAD SIGNS-BOX BEAM CLOSED TRUSS SINGLE AND TWO POST TYPE GENERAL FRAME DETAILS

NO SCALE

ALL DIMENSIONS ARE IN MILLIMETERS UNLESS OTHERWISE SHOWN

S40B

STD. PLAN S40B

Return to Table of Contents

DIST	COUNTY	ROUTE	KILOMETER POST TOTAL PROJECT	SHEET NO.	TOTAL SHEETS

Caltrans Metric

REGISTERED CIVIL ENGINEER

July 1, 1997
PLANS APPROVAL DATE

REGISTERED PROFESSIONAL ENGINEER Jeffrey B. Woody No. C41260 Exp. 3-31-99 CIVIL STATE OF CALIFORNIA

The State of California or its officers or agents shall not be responsible for the accuracy or completeness of electronic copies of this plan sheet.

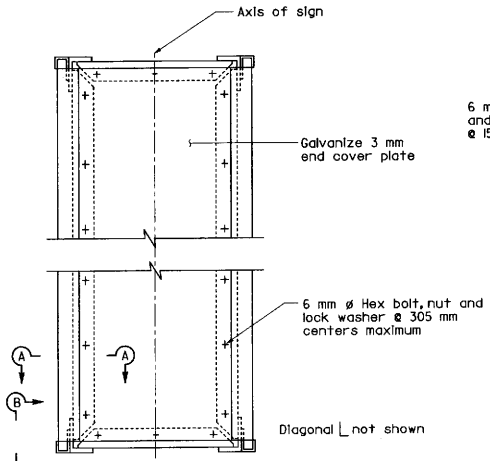

CANTILEVER END VIEW

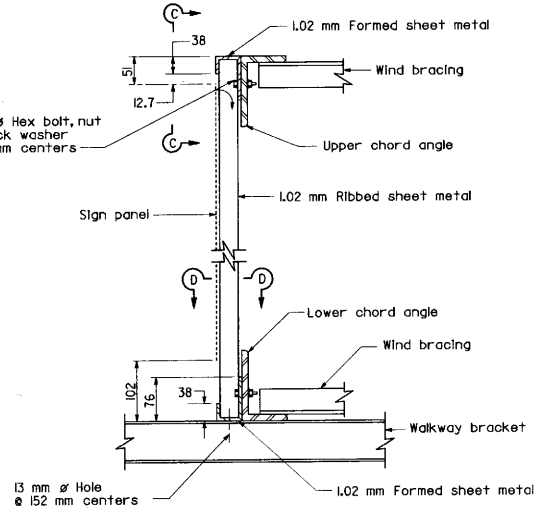

TYPICAL SECTION

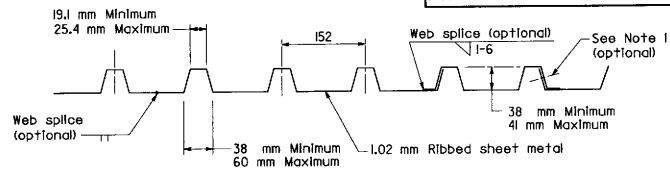

SECTION D-D

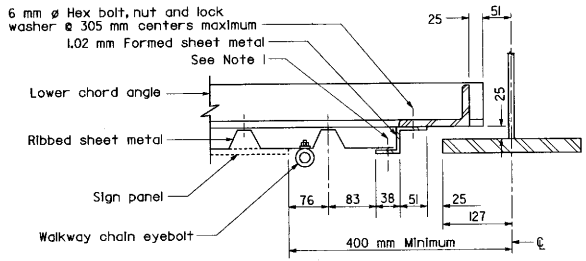

HORIZONTAL SECTION AT POST
TWO POST TYPE

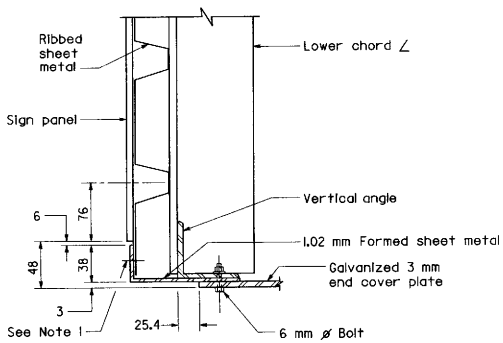

SECTION A-A

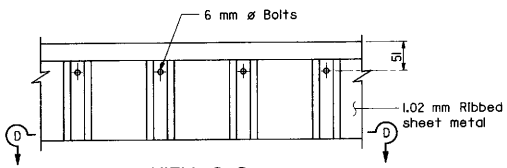

VIEW C-C

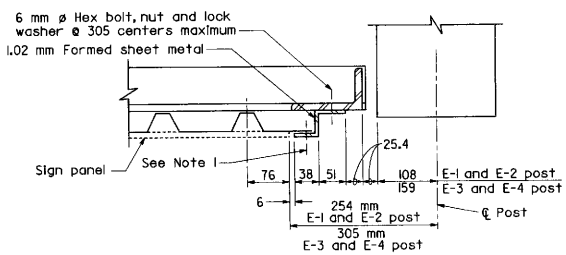

HORIZONTAL SECTION AT POST
CANTILEVER TYPE

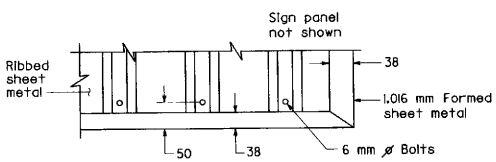

VIEW B-B

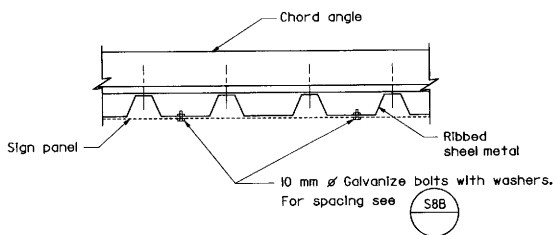

MOUNTING DETAILS FOR
OVERHEAD FORMED PANELS

NOTES

1. Approved blind rivets 5 mm diameter @ 152 mm centers.
2. For mounting details of laminated panel signs see S8C. Panel shall cover ribbed sheet metal by 76 mm or more.

STATE OF CALIFORNIA
DEPARTMENT OF TRANSPORTATION

OVERHEAD SIGNS-BOX BEAM CLOSED TRUSS RIBBED SHEET METAL DETAILS

NO SCALE

ALL DIMENSIONS ARE IN MILLIMETERS UNLESS OTHERWISE SHOWN

S40C

STD. PLAN S40C

Return to Table of Contents

DIST	COUNTY	ROUTE	KILOMETER POST TOTAL PROJECT	SHEET NO.	TOTAL SHEETS

REGISTERED CIVIL ENGINEER

July 1, 1997
PLANS APPROVAL DATE

REGISTERED PROFESSIONAL ENGINEER Jeffrey B. Woody No. C41260 Exp. 3-31-99 CIVIL STATE OF CALIFORNIA

The State of California or its officers or agents shall not be responsible for the accuracy or completeness of electronic copies of this plan sheet.

Caltrans Metric

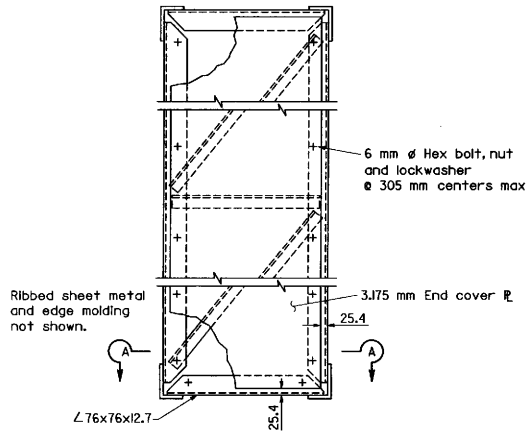

VIEW F-F
At cantilever end

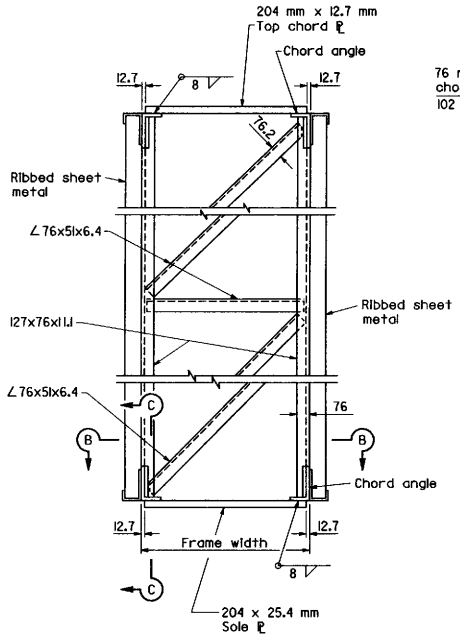

POST-END VIEW

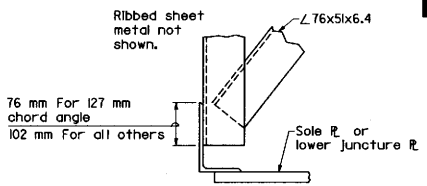

DETAIL D

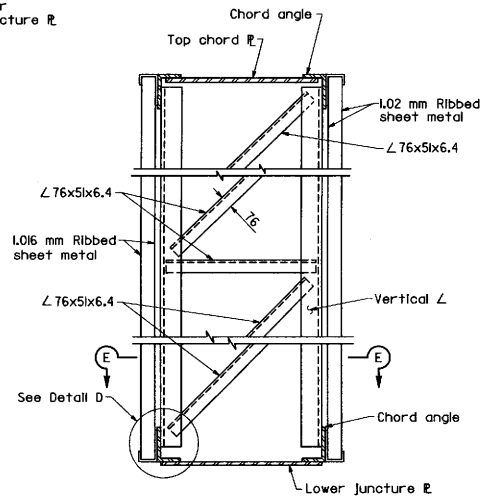

SECTION AT INSET POST

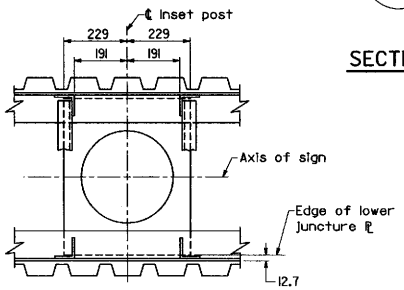

SECTION E-E

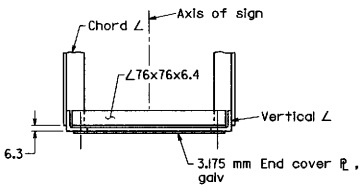

SECTION A-A

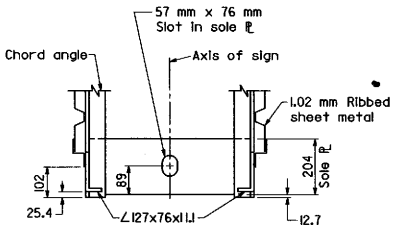

SECTION B-B

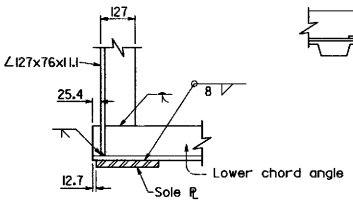

SECTION C-C

STATE OF CALIFORNIA
DEPARTMENT OF TRANSPORTATION

OVERHEAD SIGNS-BOX BEAM CLOSED TRUSS-TWO POST TYPE FRAME DETAILS

NO SCALE

ALL DIMENSIONS ARE IN MILLIMETERS UNLESS OTHERWISE SHOWN

S40D

STD. PLAN S40D

Return to Table of Contents

DIST	COUNTY	ROUTE	KILOMETER POST TOTAL PROJECT	SHEET NO.	TOTAL SHEETS

REGISTERED CIVIL ENGINEER

July 1, 1997
PLANS APPROVAL DATE

The State of California or its officers or agents shall not be responsible for the accuracy or completeness of electronic copies of this plan sheet.

REGISTERED PROFESSIONAL ENGINEER Jeffrey B. Woody No. C41260 Exp. 3-31-99 CIVIL STATE OF CALIFORNIA

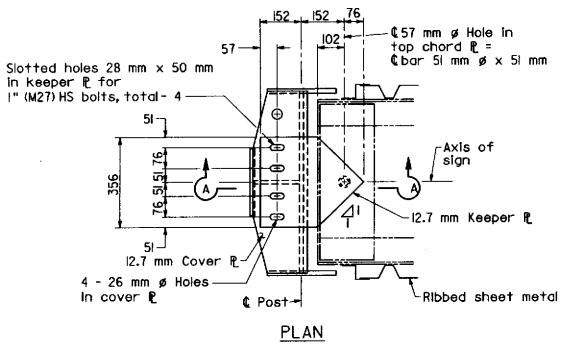

PLAN

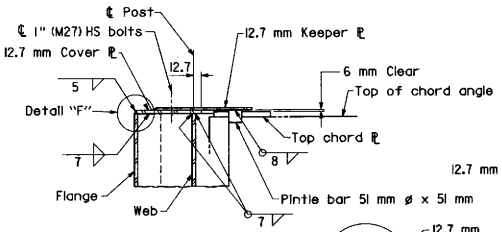

SECTION A-A

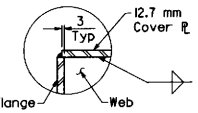

DETAIL F

UPPER JUNCTURE CONNECTION
END POST

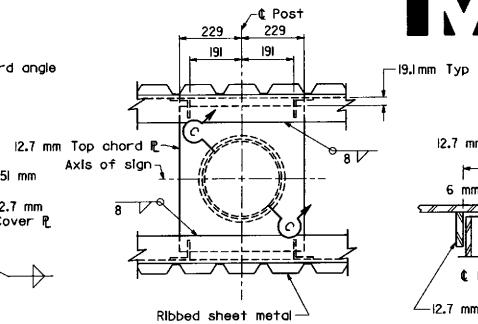

PLAN

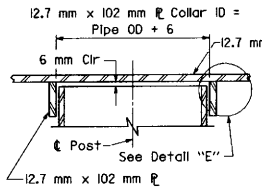

SECTION C-C

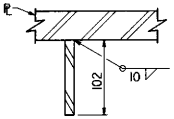

DETAIL E

UPPER JUNCTURE CONNECTION
INSET POST

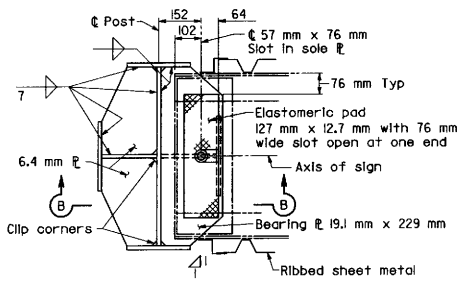

PLAN

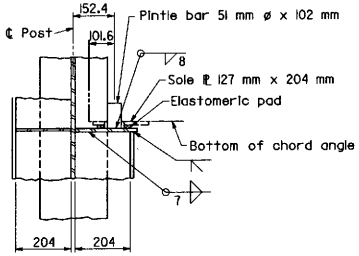

SECTION B-B

LOWER JUNCTURE CONNECTION
END POST

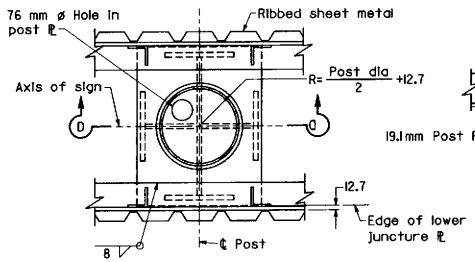

PLAN

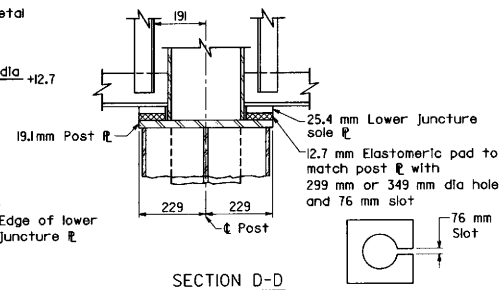

SECTION D-D

LOWER JUNCTURE CONNECTION
INSET POST

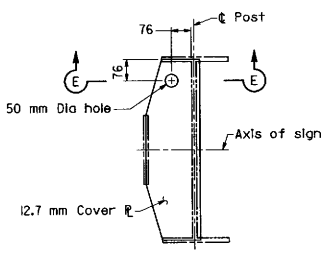

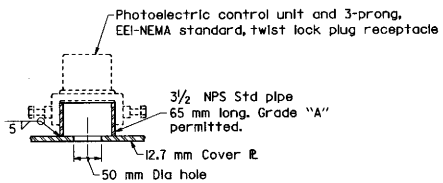

SECTION E-E

PHOTOELECTRIC CONTROL UNIT

STATE OF CALIFORNIA
DEPARTMENT OF TRANSPORTATION

OVERHEAD SIGNS-BOX BEAM CLOSED TRUSS-TWO POST TYPE FRAME JUNCTURE DETAILS

NO SCALE

ALL DIMENSIONS ARE IN MILLIMETERS UNLESS OTHERWISE SHOWN

S40E

STD. PLAN S40E

Return to Table of Contents

DIST	COUNTY	ROUTE	KILOMETER POST TOTAL PROJECT	SHEET NO.	TOTAL SHEETS

REGISTERED CIVIL ENGINEER

July 1, 1997
PLANS APPROVAL DATE

REGISTERED PROFESSIONAL ENGINEER Jeffrey B. Woody No. C41260 Exp. 3-31-99 CIVIL STATE OF CALIFORNIA

The State of California or its officers or agents shall not be responsible for the accuracy or completeness of electronic copies of this plan sheet.

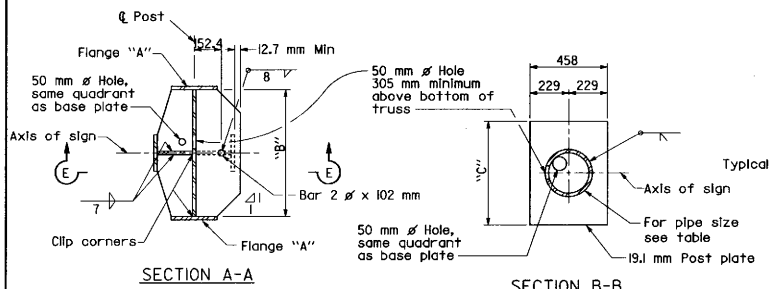

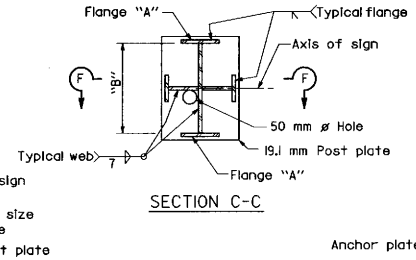

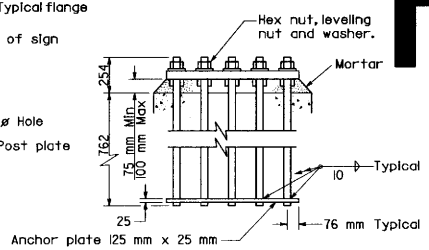

ANCHORAGE DETAILS

NOTE
For dimensions not shown see table

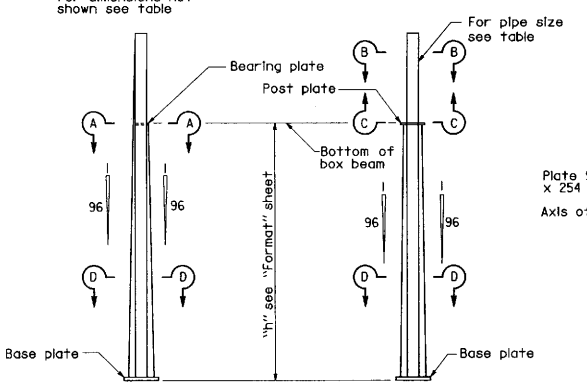

ELEVATION

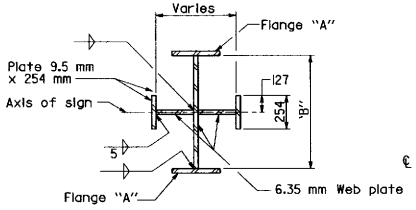

NOTE
Locate 75 mm ø hole for conduit in quadrant away from approaching traffic-center 51 mm from web plates.

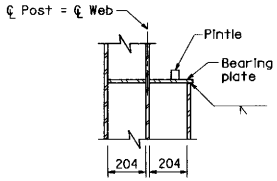

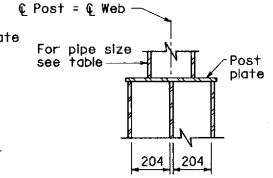

POST TYPE	BASE PLATE (mm)	ANCHOR BOLTS		FLANGE	POST OR BEARING PLATE		INSET POST	
		Dia (mm)	No	"A" (mm)	"B" (mm)	"C" (mm)	PIPE SIZE NPS	PIPE SIZE WALL THICKNESS (mm)
A-1	51x610x1016	64	6	9.5x254	661			
A-2	64x610x1016	64	8	12.7x254	661			
A-3	64x610x1016	64	8	19.0x254	661			
A-4	64x610x1016	64	8	25.4x254	661			
A-5	64x610x1016	64	8	31.8x254	661			
B-1	51x762x1143	57	8	12.7x254	813			
B-2	51x762x1143	64	8	19x254	813			
B-3	64x762x1194	64	8	25.4x254	813			
B-4	64x762x1194	64	8	31.8x254	813			
B-5	64x762x1194	64	10	38.1x254	813			
C-1	51x610x839	57	6	12.7x254	508	610	10	10.03
C-2	64x762x915	57	8	19x254	508	610	10	13.49
C-3	64x762x915	64	8	25.4x254	508	610	10	18.24
C-4	70x762x915	64	8	31.8x254	508	610	10	25.4
C-5	70x762x915	64	10	38.1x254	508	610	10	26.97
C-6	70x966x966	64	10	44.4x254	508	648	10	26.97
C-7	70x966x966	64	10	50.8x254	508	648	10	26.97
C-8	70x966x966	64	10	57.1x254	508	648	10	26.97
D-1	64x610x1016	64	8	19x254	661	762	12	12.7
D-2	70x762x1067	64	8	25.4x254	661	762	12	15.88
D-3	70x762x1067	64	10	31.8x254	661	762	12	21.41
D-4	64x966x1067	64	10	38.1x254	661	762	12	21.41
D-5	64x966x1067	64	10	44.4x254	661	800	12	21.41
D-6	76x966x1194	64	10	50.8x254	661	800	12	21.41
D-7	76x966x1194	64	10	57.1x254	661	800	12	21.41

1. Thread upper 260 mm of anchor bolts and galvanize upper 305 mm.
2. Anchor plates may be retained with Hex nut or formed head.
3. 64 mm ø Anchor bolts may be substituted for 57 mm ø bolts.
4. For foundation details see S39

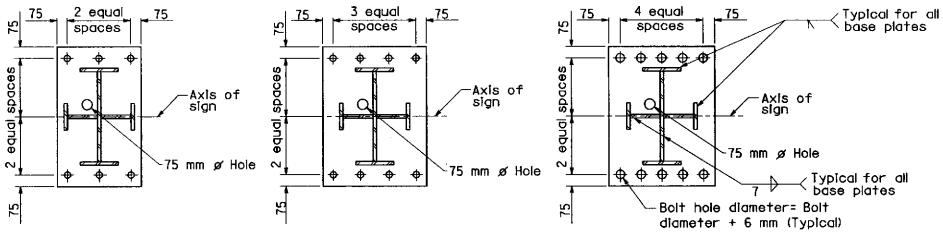

TYPICAL BASE PLATES

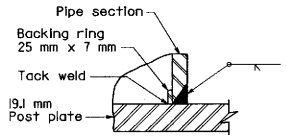

PIPE SECTION TO POST PLATE

STATE OF CALIFORNIA
DEPARTMENT OF TRANSPORTATION

OVERHEAD SIGNS-BOX BEAM CLOSED TRUSS-TWO POST TYPE POST DETAILS

NO SCALE

ALL DIMENSIONS ARE IN MILLIMETERS UNLESS OTHERWISE SHOWN

S40F

STD. PLAN S40F

Return to Table of Contents

DIST	COUNTY	ROUTE	KILOMETER POST TOTAL PROJECT	SHEET NO.	TOTAL SHEETS

REGISTERED CIVIL ENGINEER

July 1, 1997
PLANS APPROVAL DATE

REGISTERED PROFESSIONAL ENGINEER
Jeffrey B. Woody
No. C41260
Exp. 3-31-99
CIVIL
STATE OF CALIFORNIA

The State of California or its officers or agents shall not be responsible for the accuracy or completeness of electronic copies of this plan sheet.

Metric

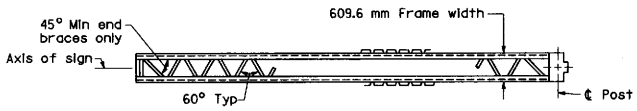

PLAN

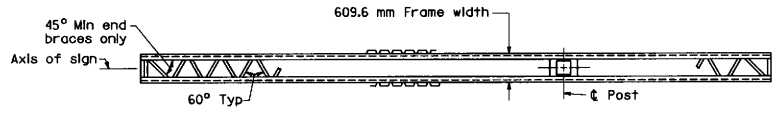

PLAN

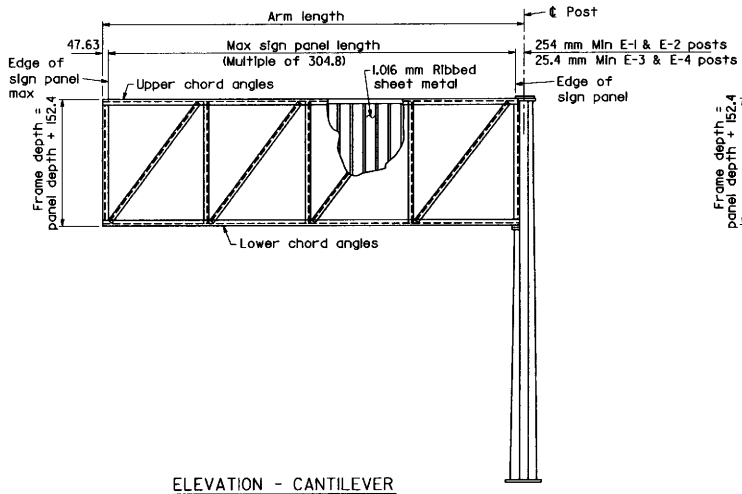

ELEVATION - CANTILEVER

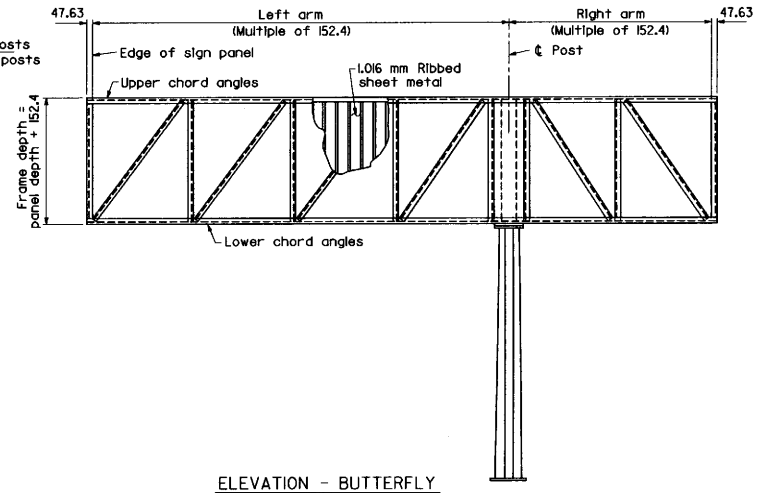

ELEVATION - BUTTERFLY

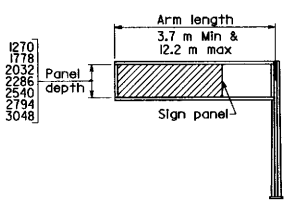

CANTILEVER

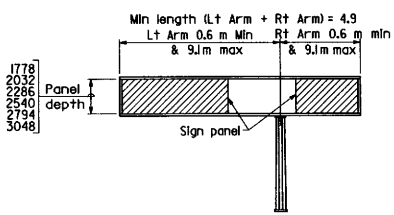

BUTTERFLY

RANGE OF STRUCTURE SIZES

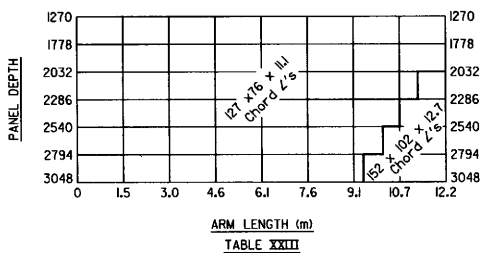

TABLE XXIII

UPPER & LOWER CHORD ANGLE SELECTION CHART

(See Notes)

NOTES

1. For butterfly, use chord angle size determined by longer arm for both sides.
2. For size of vertical and diagonal angles, see S40H and S40K
3. For foundation details see S39

STATE OF CALIFORNIA
DEPARTMENT OF TRANSPORTATION

OVERHEAD SIGNS-BOX BEAM CLOSED TRUSS SINGLE POST TYPE FRAME MEMBERS

NO SCALE

ALL DIMENSIONS ARE IN MILLIMETERS UNLESS OTHERWISE SHOWN

S40G

STD. PLAN S40G

Return to Table of Contents

DIST	COUNTY	ROUTE	KILOMETER POST TOTAL PROJECT	SHEET NO.	TOTAL SHEETS

REGISTERED CIVIL ENGINEER

July 1, 1997
PLANS APPROVAL DATE

The State of California or its officers or agents shall not be responsible for the accuracy or completeness of electronic copies of this plan sheet.

REGISTERED PROFESSIONAL ENGINEER Jeffrey B. Woody No. C41260 Exp. 3-31-99 CIVIL STATE OF CALIFORNIA

Metric

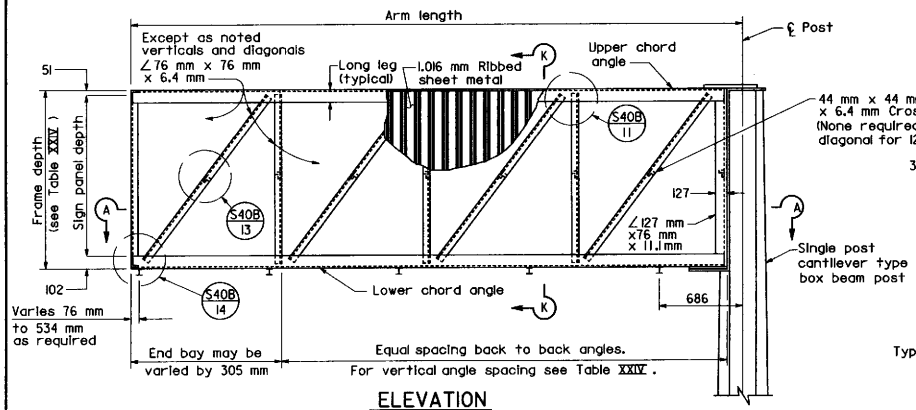

ELEVATION

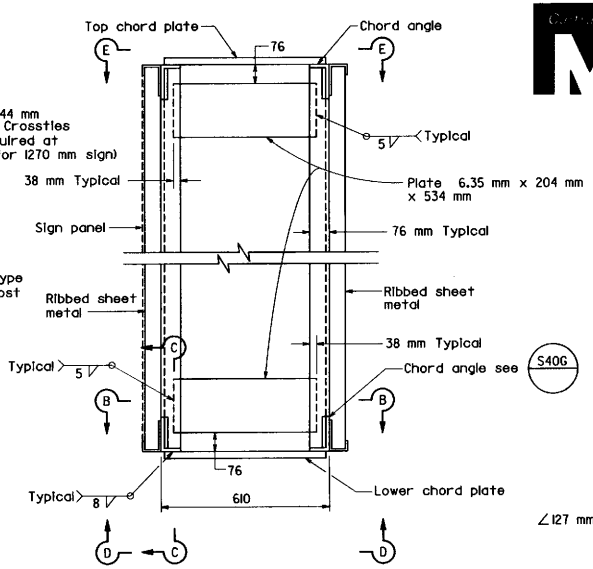

POST END VIEW

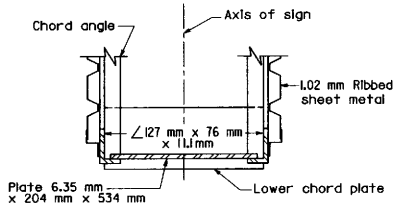

SECTION B-B

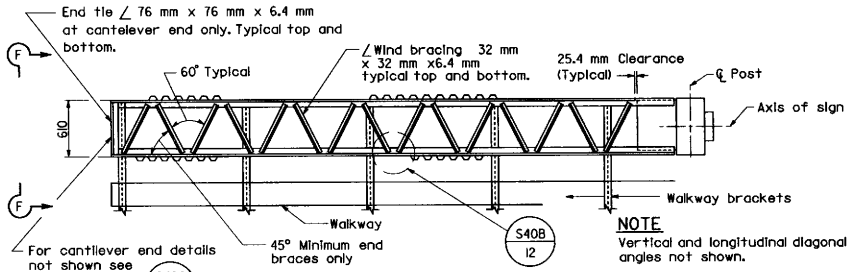

SECTION A-A

NOTE
Vertical and longitudinal diagonal angles not shown.

NOTES
1. For Section K-K see S40B
2. For View F-F at cantilever end, see S40D

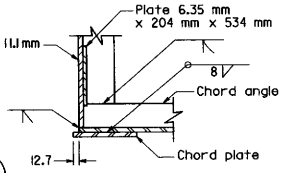

SECTION C-C

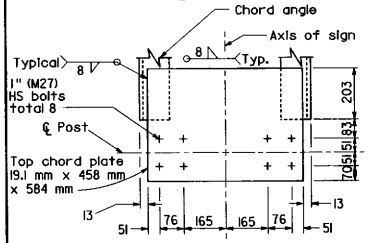

VIEW E-E

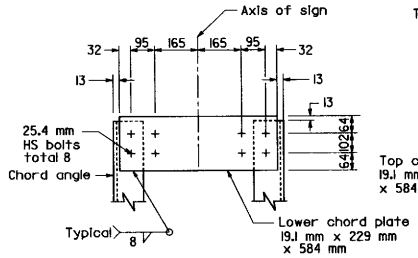

VIEW D-D

TYPE E-1 AND E-2

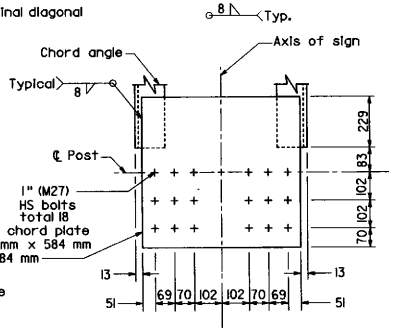

VIEW E-E

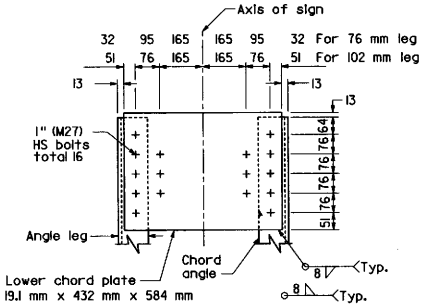

VIEW D-D

TYPE E-3 AND E-4

CHORD PLATE DETAILS

TABLE XXIV

SIGN PANEL DEPTH (mm)	FRAME DEPTH (mm)	MAXIMUM VERTICAL ANGLE SPACING (mm)
1270	1423	1372
1778	1931	1677
2032	2185	1829
2286	2439	2134
2540	2693	2134
2794	2947	2286
3048	3201	2286

STATE OF CALIFORNIA
DEPARTMENT OF TRANSPORTATION

OVERHEAD SIGNS-BOX BEAM CLOSED TRUSS SINGLE POST CANTILEVER FRAME DETAILS

NO SCALE

ALL DIMENSIONS ARE IN MILLIMETERS UNLESS OTHERWISE SHOWN

S40H

Return to Table of Contents

DIST	COUNTY	ROUTE	KILOMETER POST TOTAL PROJECT	SHEET NO.	TOTAL SHEETS

Caltrans Metric

REGISTERED CIVIL ENGINEER

July 1, 1997
PLANS APPROVAL DATE

REGISTERED PROFESSIONAL ENGINEER Jeffrey B. Woody No. C41260 Exp. 3-31-99 CIVIL STATE OF CALIFORNIA

The State of California or its officers or agents shall not be responsible for the accuracy or completeness of electronic copies of this plan sheet.

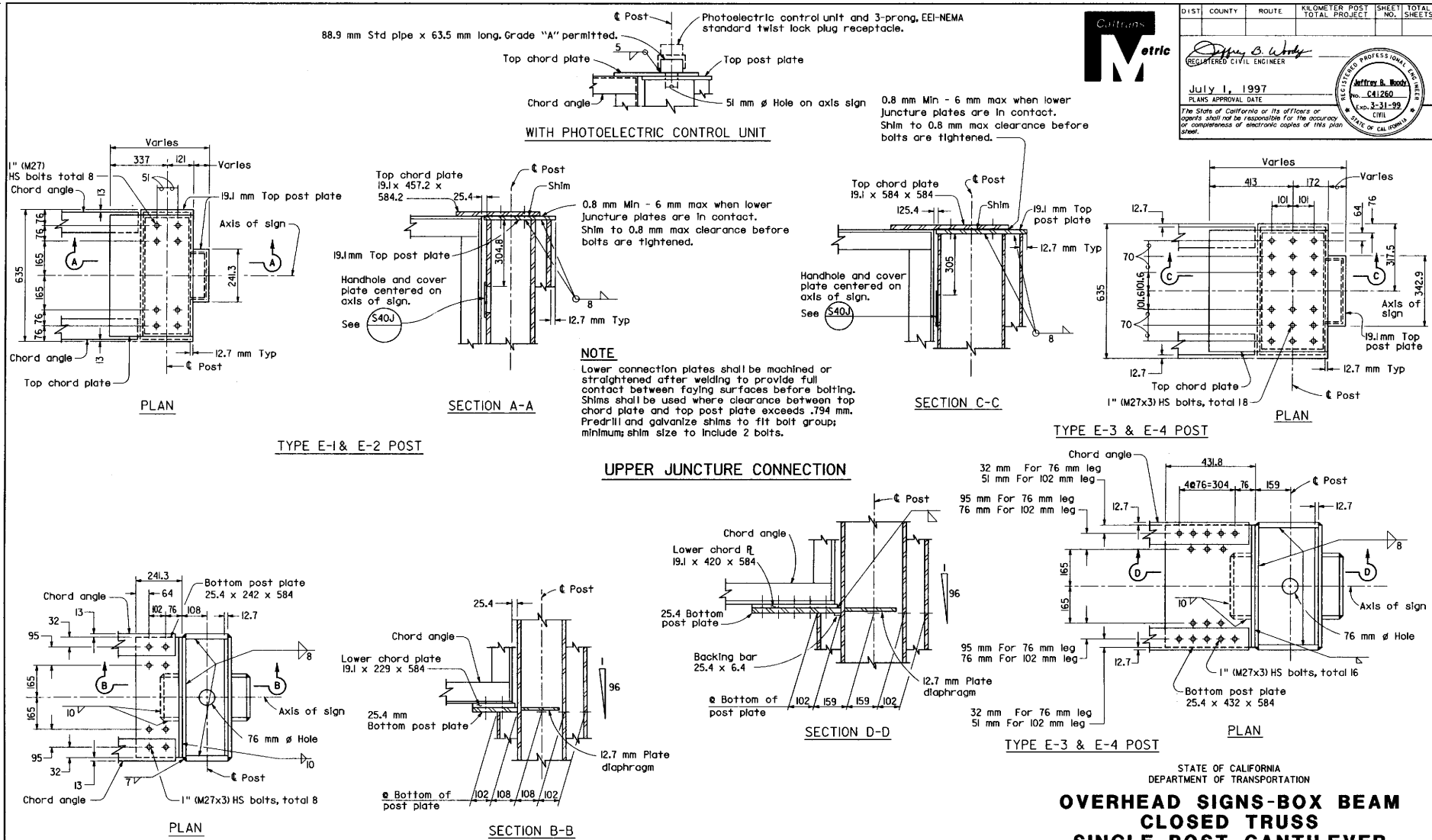

STATE OF CALIFORNIA
DEPARTMENT OF TRANSPORTATION

OVERHEAD SIGNS-BOX BEAM CLOSED TRUSS SINGLE POST CANTILEVER FRAME JUNCTURE DETAILS

NO SCALE

ALL DIMENSIONS ARE IN MILLIMETERS UNLESS OTHERWISE SHOWN

S40I

STD. PLAN S40I

Return to Table of Contents

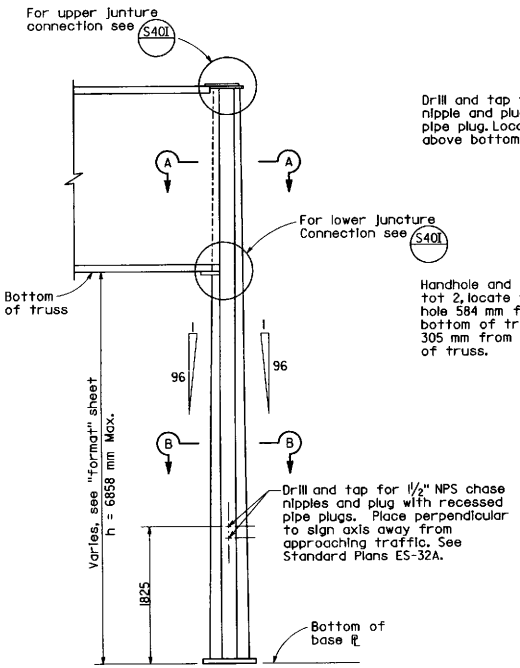

ELEVATION

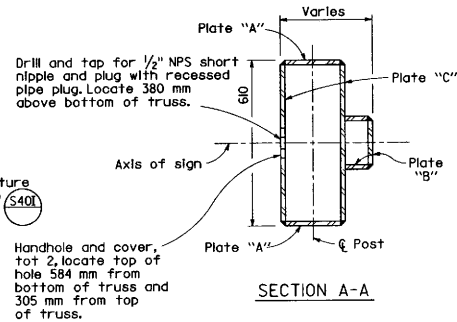

SECTION A-A

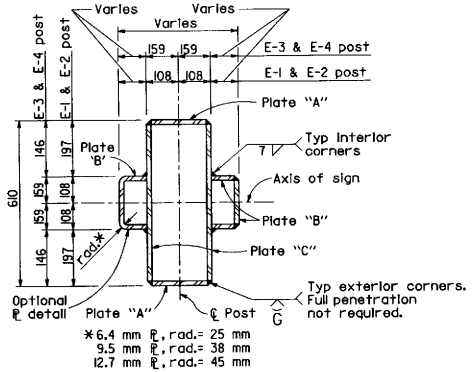

SECTION B-B

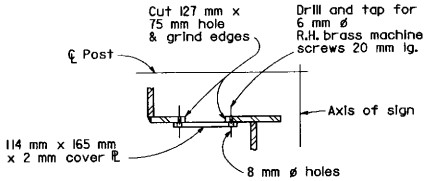

NOTE

Face handhole and cover ℙ away from traveled way except as shown. See "Section A-A".

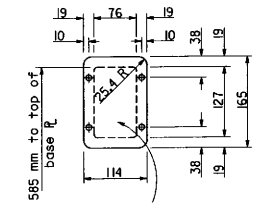

HANDHOLE AND COVER DETAIL

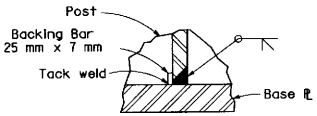

POST TO BASE PLATE WELDING DETAILS

NOTE

1. For foundation details see S39

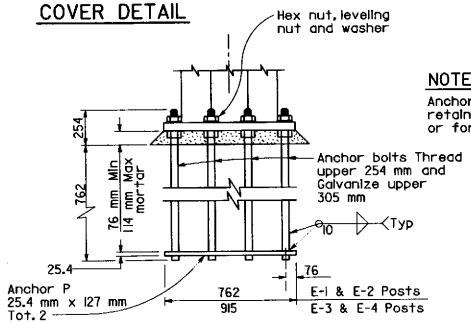

ANCHORAGE DETAILS

NOTE

Anchor ℙs may be retained with hex nuts or formed heads.

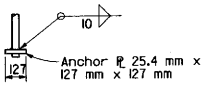

SINGLE SIDE BOLT

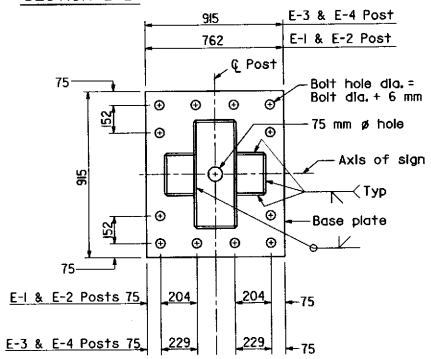

BASE PLATE

Post Type	Base Plate (mm)	Plate "A" (mm)	Plate "B" (mm)	Plate "C" (mm)	* Anchor Bolts (mm)
E-1	51x762x915	12.7	6.4	9.5	12-45 mm ø
E-2	64x762x915	25.4	9.5	12.7	12-51 mm ø
E-3	64x915x915	25.4	9.5	12.7	12-57 mm ø
E-4	64x915x915	25.4	12.7	15.9	12-57 mm ø

* 51mm ø Anchor bolts may be substituted for 45 mm ø bolts.

DIST	COUNTY	ROUTE	KILOMETER POST TOTAL PROJECT	SHEET NO.	TOTAL SHEETS

REGISTERED CIVIL ENGINEER

July 1, 1997
PLANS APPROVAL DATE

REGISTERED PROFESSIONAL ENGINEER Jeffrey B. Woody No. C41260 Exp. 3-31-99 CIVIL STATE OF CALIFORNIA

The State of California or its officers or agents shall not be responsible for the accuracy or completeness of electronic copies of this plan sheet.

California Metric

STATE OF CALIFORNIA
DEPARTMENT OF TRANSPORTATION

OVERHEAD SIGNS-BOX BEAM CLOSED TRUSS SINGLE POST CANTILEVER POST DETAILS

NO SCALE

ALL DIMENSIONS ARE IN MILLIMETERS UNLESS OTHERWISE SHOWN

S40J

STD. PLAN S40J

Return to Table of Contents

DIST	COUNTY	ROUTE	KILOMETER POST TOTAL PROJECT	SHEET NO.	TOTAL SHEETS

REGISTERED CIVIL ENGINEER

July 1, 1997
PLANS APPROVAL DATE

REGISTERED PROFESSIONAL ENGINEER Jeffrey B. Woody No. C41260 Exp. 3-31-99 CIVIL STATE OF CALIFORNIA

The State of California or its officers or agents shall not be responsible for the accuracy or completeness of electronic copies of this plan sheet.

California Metric

NOTE

Left arm length may be shorter, longer or equal to right arm length.

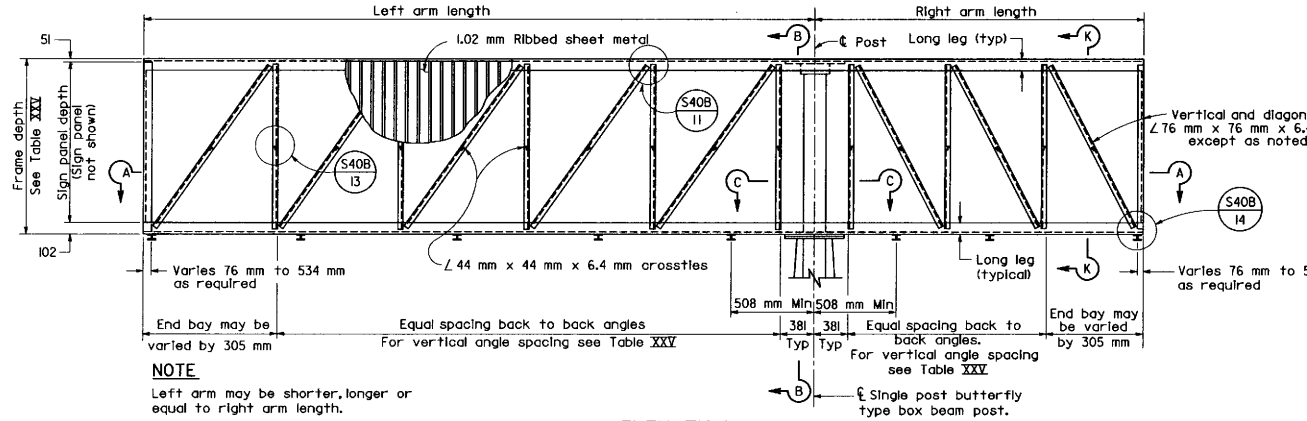

NOTE

Left arm may be shorter, longer or equal to right arm length.

ELEVATION

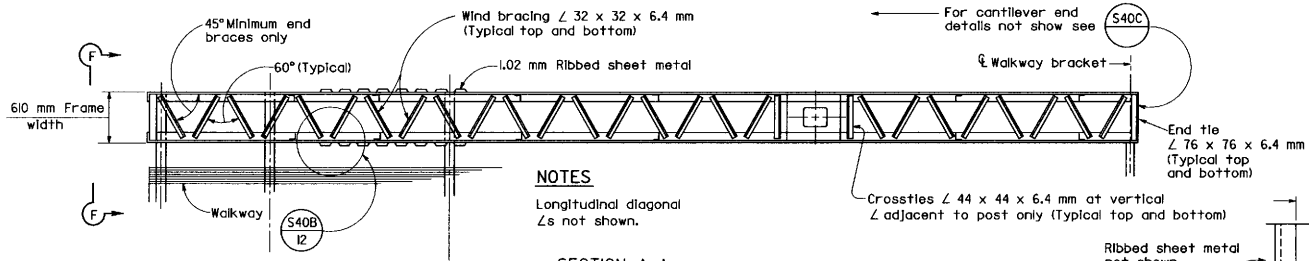

NOTES

Longitudinal diagonal ∠s not shown.

SECTION A-A

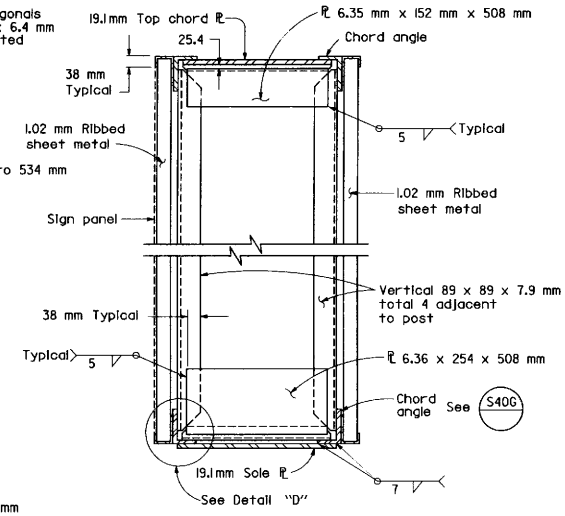

SECTION B-B

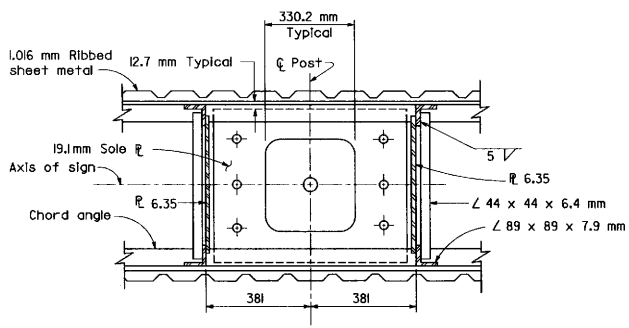

SECTION C-C

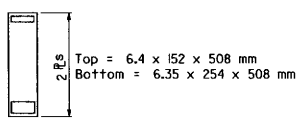

SIGN DEPTH 1778-2286

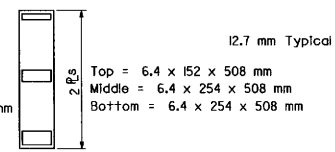

SIGN DEPTH 2540-3048

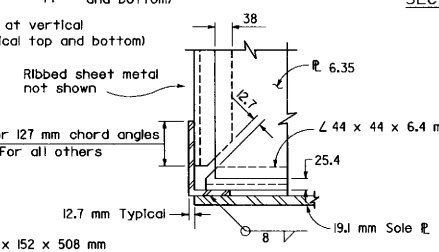

DETAIL D

Sign Panel Depth (mm)	Frame Depth (mm)	Maximum Vertical Angle Spacing (mm)	Arm Length (mm)	
1778	1931	1677	1219	No diagonals required
2032	2185	1829	1524	
2286	2439	2134	1524	
2540	2693	2134	1829	
2794	2947	2286	1829	
3048	3201	2286	1829	

TABLE XXV

NOTES

1. For Detail (11) thru (14) and Section K-K, see (S40B)
2. For View F-F at cantilever end, see (S40D)

STATE OF CALIFORNIA
DEPARTMENT OF TRANSPORTATION

OVERHEAD SIGNS-BOX BEAM CLOSED TRUSS SINGLE POST BUTTERFLY FRAME DETAILS

NO SCALE

ALL DIMENSIONS ARE IN MILLIMETERS UNLESS OTHERWISE SHOWN

S40K

STD. PLAN S40K

Return to Table of Contents

DIST	COUNTY	ROUTE	KILOMETER POST TOTAL PROJECT	SHEET NO.	TOTAL SHEETS

REGISTERED CIVIL ENGINEER

July 1, 1997
PLANS APPROVAL DATE

Jeffrey B. Woody
No. C41260
Exp. 3-31-99
CIVIL
REGISTERED PROFESSIONAL ENGINEER
STATE OF CALIFORNIA

The State of California or its officers or agents shall not be responsible for the accuracy or completeness of electronic copies of this plan sheet.

Caltrans Metric

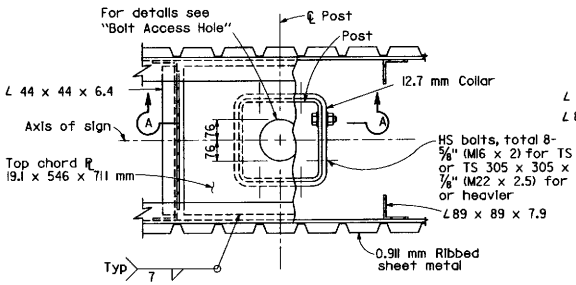

PLAN

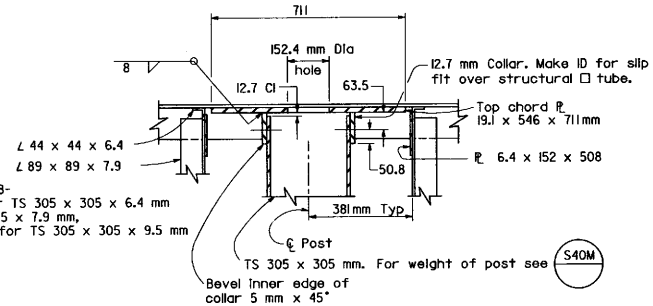

SECTION A-A

UPPER JUNCTURE CONNECTION

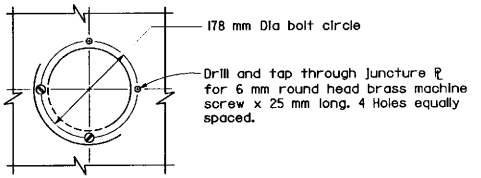

PLAN

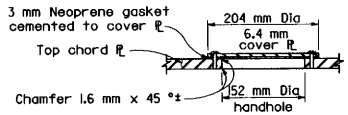

SECTION

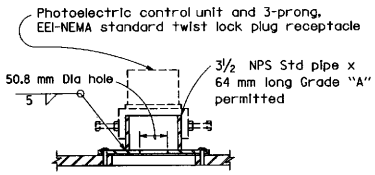

SECTION

With photoelectric control unit

BOLT ACCESS HOLE

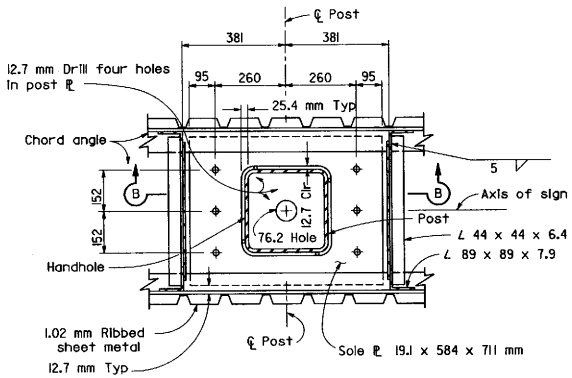

PLAN

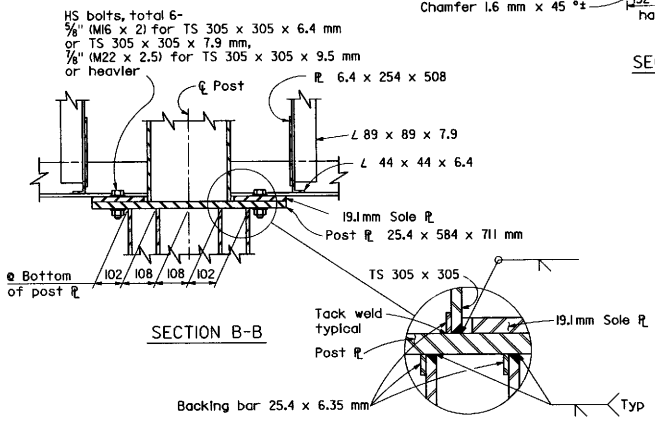

SECTION B-B

NOTE

Lower connection plates shall be machined or straightened after welding to provide full contact between faying surfaces before bolting.

LOWER JUNCTURE CONNECTION

STATE OF CALIFORNIA
DEPARTMENT OF TRANSPORTATION

OVERHEAD SIGNS-BOX BEAM CLOSED TRUSS SINGLE POST BUTTERFLY FRAME JUNCTURE DETAILS

NO SCALE

ALL DIMENSIONS ARE IN MILLIMETERS UNLESS OTHERWISE SHOWN

S40L

STD. PLAN S40L

Return to Table of Contents

DIST	COUNTY	ROUTE	KILOMETER POST TOTAL PROJECT	SHEET NO.	TOTAL SHEETS

REGISTERED CIVIL ENGINEER

July 1, 1997
PLANS APPROVAL DATE

REGISTERED PROFESSIONAL ENGINEER Jeffrey B. Woody No. C41260 Exp. 3-31-99 CIVIL STATE OF CALIFORNIA

The State of California or its officers or agents shall not be responsible for the accuracy or completeness of electronic copies of this plan sheet.

Caltrans Metric

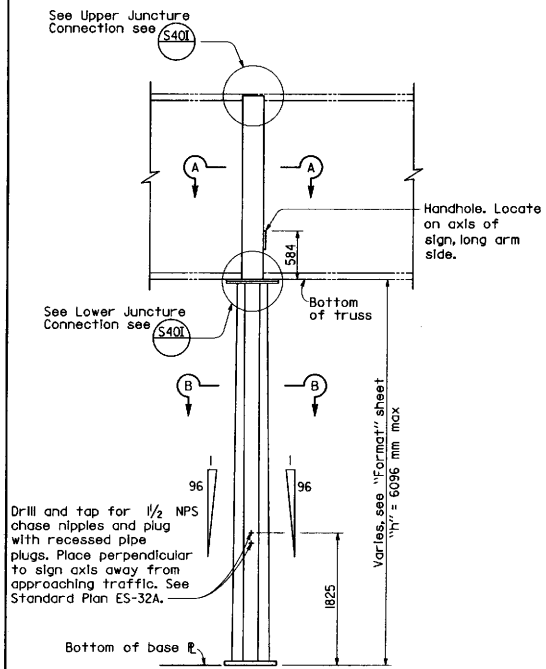

ELEVATION

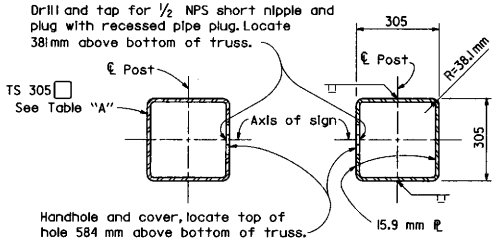

TYPE F-1 THRU F-3 TYPE F-4 & F-5

SECTION A-A

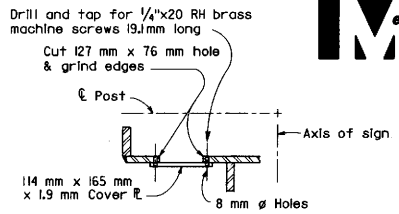

NOTE

Face handhole away from traveled way. On F-1 type post locate handhole on centerline post in Plate "A".

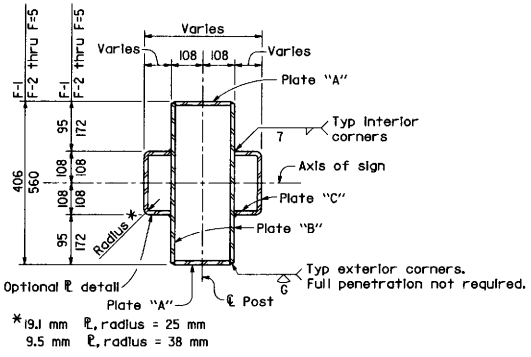

SECTION B-B

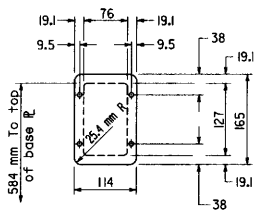

NOTE

For foundation details see S39

HANDHOLE AND COVER DETAIL

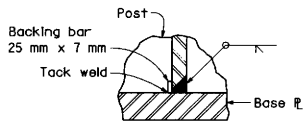

PLATES A, B & C
POST TO BASE PLATE
WELDING DETAILS

TABLE "A"						
Post Type	Plate "A" (mm)	Plate "B" (mm)	Plate "C" (mm)	Base Plate (mm)	* Anchor Bolts No & Dia	Structural Tube
F-1	6.4x204	6.4	6.4	51x762x915	8-51mm ø	305x305x7.9
F-2	12.7x204	6.4	6.4	51x762x915	12-45 mm ø	305x305x9.5
F-3	38.1x204	6.4	6.4	51x762x915	12-51mm ø	305x305x12.7
F-4	38.1x197	9.5	9.5	64x762x915	12-57 mm ø	See Section A-A
F-5	38.1x178	19.1	19.1	70x762x915	12-57 mm ø	

* 51mm ϕ Anchor bolts may be substituted for 45 mm ϕ bolts.

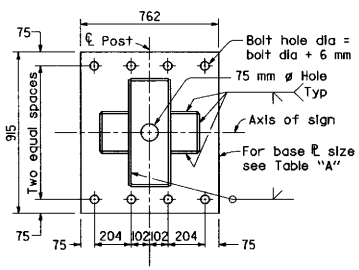

TYPE F-1

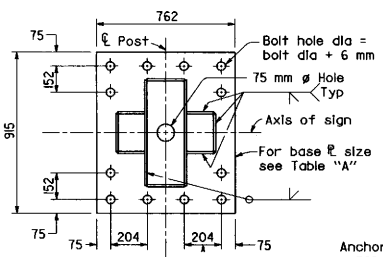

TYPE F-2 THRU F-5

BASE PLATE DETAILS

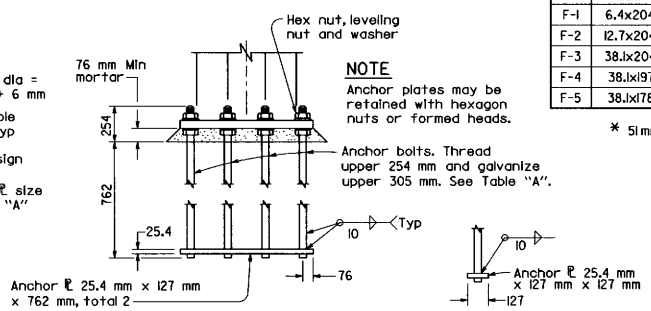

NOTE

Anchor plates may be retained with hexagon nuts or formed heads.

SINGLE SIDE BOLT

ANCHORAGE DETAILS

STATE OF CALIFORNIA
DEPARTMENT OF TRANSPORTATION

OVERHEAD SIGNS-BOX BEAM CLOSED TRUSS SINGLE POST BUTTERFLY POST DETAILS

NO SCALE

ALL DIMENSIONS ARE IN MILLIMETERS UNLESS OTHERWISE SHOWN

S40M

STD. PLAN S40M

Return to Table of Contents

DIST	COUNTY	ROUTE	KILOMETER POST TOTAL PROJECT	SHEET NO.	TOTAL SHEETS

REGISTERED CIVIL ENGINEER

July 1, 1997
PLANS APPROVAL DATE

REGISTERED PROFESSIONAL ENGINEER Jeffrey B. Woody No. C41260 Exp. 3-31-99 CIVIL STATE OF CALIFORNIA

The State of California or its officers or agents shall not be responsible for the accuracy or completeness of electronic copies of this plan sheet.

Metric

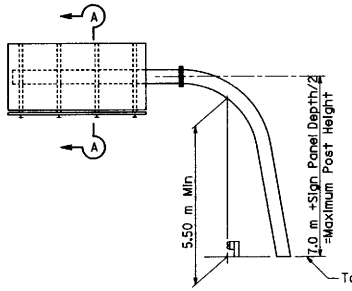

SLANTED SINGLE POST TYPE

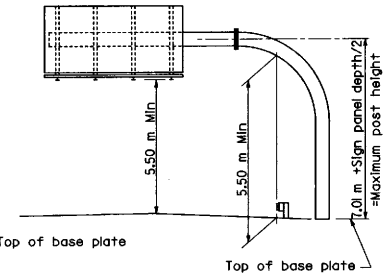

VERTICAL SINGLE POST TYPE

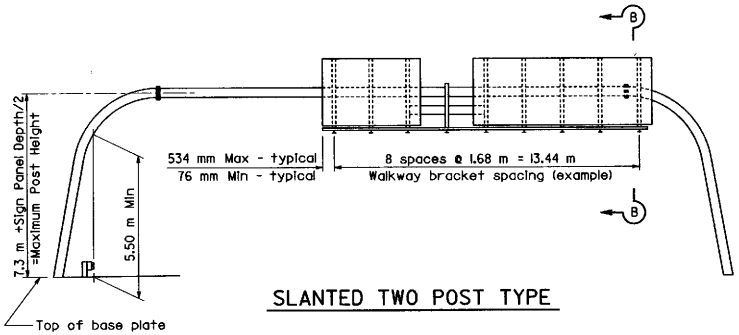

SLANTED TWO POST TYPE

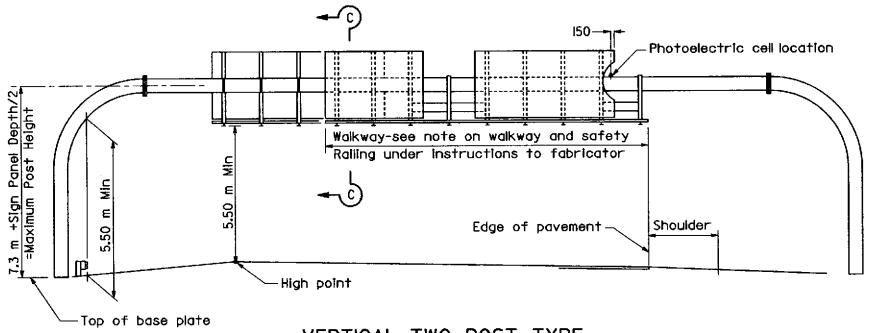

VERTICAL TWO POST TYPE

INSTRUCTIONS TO FABRICATOR

Format sheet shows:

1. Sign structure location.
2. Length of structure span.
3. Panel size and location on structure.
4. Post height to bottom of panel or mast arm elevation.
5. Base plate elevation.
6. Photoelectric cell location if required.
7. Walkway location.

INDEX

1. Instructions and examples.
2. Single post type - layout and pipe selection.
3. Two post type - layout and pipe selection.
4. Structural frame details No. 1.
5. Structural frame details No. 2.
6. Walkway details (S9)
7. Safety railing and cable details (S11)
8. Foundation details.

WALKWAY BRACKETS:

Maintain uniform spacing where possible.
Maximum spacing shall not exceed 1.68 m
Minimum clear to field splice = 305 mm ±

WALKWAY AND SAFETY RAILING:

Walkway to extend full length of sign area and be continuous between signs. Extend walkway to edge of pavement if required. Safety railing to protect entire walkway.

PHOTOELECTRIC CELL:

Place behind sign panel nearest right shoulder unless otherwise shown on format sheet.

NOTES

Specifications:

Design: A.A.S.H.T.O. Standard Specifications for Structural and Supports for Highway Signs, Luminaires and Traffic Signals 1994.
Wind dynamics and resultant fatigue life were analyzed using Department of Transportation program WEFFLS as modified by structure Design.

Construction: Standard specifications and the special provisions.

Wind loading: 129 km/h velocity.

Soil pressure: .086 MPa

Minimum vertical clearance: 5.50 m above roadway and shoulders.

Welding: All welding continuous unless otherwise noted on the plans. All welding to be done in accordance with the Standard Specifications.

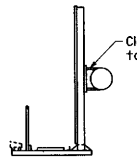

SECTION A-A

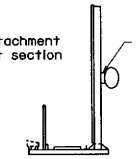

SECTION B-B

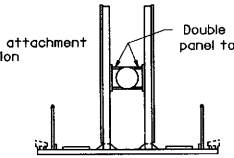

SECTION C-C

STATE OF CALIFORNIA
DEPARTMENT OF TRANSPORTATION

OVERHEAD SIGNS-TUBULAR INSTRUCTIONS AND EXAMPLES

NO SCALE

ALL DIMENSIONS ARE IN MILLIMETERS UNLESS OTHERWISE SHOWN

S40N

STD. PLAN S40N

Return to Table of Contents

DIST	COUNTY	ROUTE	KILOMETER POST TOTAL PROJECT	SHEET NO.	TOTAL SHEETS

REGISTERED CIVIL ENGINEER

July 1, 1997
PLANS APPROVAL DATE

The State of California or its officers or agents shall not be responsible for the accuracy or completeness of electronic copies of this plan sheet.

REGISTERED PROFESSIONAL ENGINEER Jeffrey B. Woody No. C41260 Exp. 3-31-99 CIVIL STATE OF CALIFORNIA

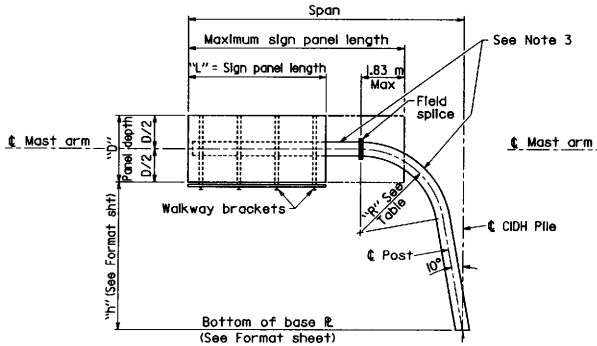

SLANTED POST CANTILEVER

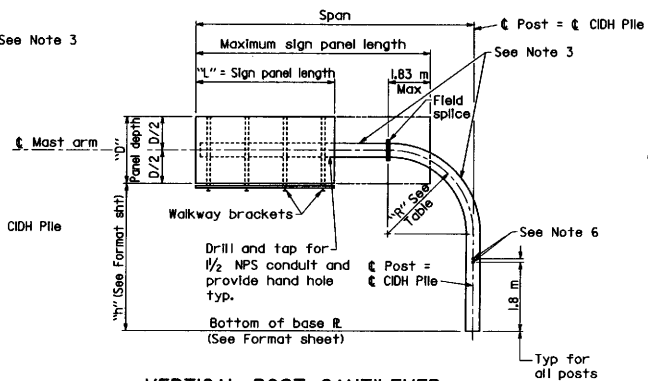

VERTICAL POST CANTILEVER

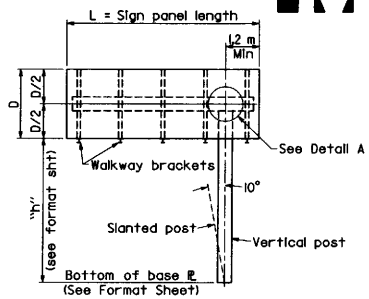

BUTTERFLY

SLANTED POST PIPE SELECTION PROCEDURE

A. Enter table to proper column with known panel depth "D" and appropriate height "h".

B. Read down column to desired span length.

C. Determine Pipe Post "Dia" and "R" for elbow by reading to the left horizontally.

VERTICAL POST PIPE SELECTION PROCEDURE

A. For vertical post cantilevers add 610 mm to the vertical post span and enter table to proper column with known panel depth "D" and appropriate height "h".

B. Read down column to desired span length.

C. Determine Pipe Post "Dia" and "R" for elbow by reading to the left horizontally.

BUTTERFLY POST PIPE SELECTION PROCEDURE

A. For butterfly post add 1.22 m to sign panel length "L" and enter table to proper column with known panel depth "D" and appropriate height "h".

B. Read down column to desired span length.

C. Determine Pipe Post "Dia" and "R" for elbow by reading to the left horizontally.

NOTES

1. The maximum sign panel overlap onto the post elbow shall not exceed 1.83 m from the field splice.
2. When several sign panels are to be installed with a space between the panels, the space shall be as small as possible and 610 mm maximum.
3. All posts between base plate and field splice are extra strong pipe. All mast arms are standard pipe.
4. During sign erection the post shall be raked as necessary with the use of the leveling nuts to make the sign panel level.
5. At final position of post all top and bottom anchor bolt nuts shall be wrench tightened against base plate.
6. Drill and tap for 1½ NPS chase nipples and plug with recessed pipe plugs. Place perpendicular to sign panel axis and away from approaching traffic.
7. NPS - Nominal Pipe Size

SLANTED POST CANTILEVER - MAXIMUM SPAN

TYPE	PIPE POST "R" (m)	PIPE POST Dia NPS	"D" (m) → / "h" (m) →	1.778 ≤6.1	1.778 >6.1,<7.01	2.032 ≤6.1	2.032 >6.1,<7.01	2.286 ≤6.1	2.286 >6.1,<7.01	2.540 ≤6.1	2.540 >6.1,<7.01	2.794 ≤6.1	2.794 >6.1,<7.01	3.048 ≤6.1	3.048 >6.1,<7.01
D	2.44	12		6.4	6.4	6.4	6.4	6.4	6.4	6.4	6.4	6.1	5.8	5.5	5.5
G	2.44	14		7.3	6.7	7.3	6.7	7.3	6.7	7.3	6.7	6.7	6.4	6.4	6.4
K	2.44	16	Span (m) →	8.5	7.6	8.5	7.6	8.5	7.6	8.5	7.6	8.5	7.6	7.6	7.3
N	2.44	18		10.1	9.4	10.1	9.4	10.1	9.4	10.1	9.4	10.1	9.4	9.4	9.1
R	2.44	20		11.6	10.4	11.6	10.4	11.6	10.4	11.6	10.4	11.6	10.4	10.7	10.4
T	3.05	24		12.2	12.2	12.2	12.2	12.2	12.2	12.2	12.2	12.2	12.2	12.2	12.2

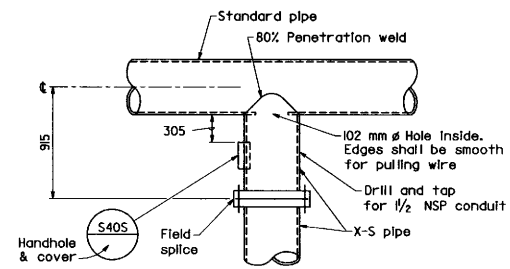

DETAIL A

STATE OF CALIFORNIA
DEPARTMENT OF TRANSPORTATION

OVERHEAD SIGNS-TUBULAR SINGLE POST TYPE LAYOUT AND PIPE SELECTION

NO SCALE

ALL DIMENSIONS ARE IN MILLIMETERS UNLESS OTHERWISE SHOWN

S40P

STD. PLAN S40P

Return to Table of Contents

DIST	COUNTY	ROUTE	KILOMETER POST TOTAL PROJECT	SHEET NO.	TOTAL SHEETS

REGISTERED CIVIL ENGINEER

July 1, 1997
PLANS APPROVAL DATE

REGISTERED PROFESSIONAL ENGINEER Jeffrey B. Woody No. C41260 Exp. 3-31-99 CIVIL STATE OF CALIFORNIA

The State of California or its officers or agents shall not be responsible for the accuracy or completeness of electronic copies of this plan sheet.

Metric

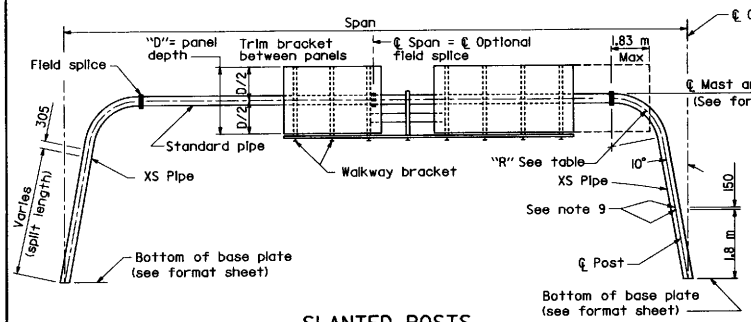

SLANTED POSTS

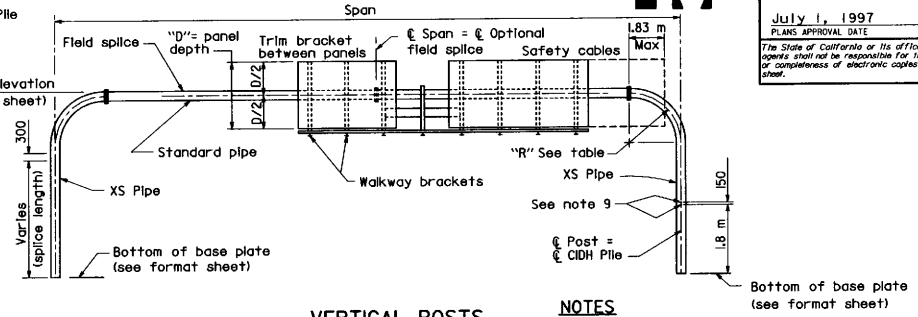

VERTICAL POSTS

* Mast arm diameter same as post.

○ Indicates camber type, see table.

SLANTED POSTS (See Note 2)

* PIPE POST "R" (m)	Dia (NPS)	Split (mm)	"D" → (m)	1.778	2.032	2.286	2.540	2.794	3.048
2.44	8	130	Span (m)	Ⓐ 15.2-17.4	Ⓐ 15.2-17.4				
2.44	10	100 150		Ⓐ 17.5-20.4	Ⓐ 17.5-20.4	Ⓐ 15.2-20.4	Ⓐ 15.2-20.4	Ⓐ 15.2-18.3	Ⓐ 15.2-17.4
2.44	12	100 200		Ⓑ 20.5-23.5	Ⓑ 20.5-23.5	Ⓑ 20.5-23.5	Ⓑ 20.5-23.5	Ⓑ 18.4-21.9	Ⓐ 17.5-21.3
2.44	14	100 200		Ⓑ 23.6-27.1	Ⓑ 23.6-27.1	Ⓒ 23.6-27.1	Ⓒ 23.6-26.5	Ⓑ 22.0-25.9	Ⓑ 21.4-25.3
2.44	16	100 200		Ⓑ 27.2-30.5	Ⓑ 27.2-30.5	Ⓒ 27.2-30.5	Ⓒ 26.6-30.5	Ⓒ 26.0-28.3	Ⓒ 25.4-28.3
3.05	18	130 200		Ⓑ 30.6-33.5	Ⓑ 30.6-33.5	Ⓒ 30.6-33.5	Ⓒ 30.6-33.5	Ⓒ 28.4-32.6	Ⓒ 28.4-32.0
3.05	20	0 130		Ⓑ 33.6-36.6	Ⓒ 33.6-36.6	Ⓒ 33.6-36.6	Ⓓ 33.6-36.6	Ⓓ 32.7-35.1	Ⓒ 32.1-33.5
3.66	24	0 130		Ⓒ 36.7-42.7	Ⓒ 36.7-42.7	Ⓓ 36.7-42.7	Ⓓ 36.7-42.7	Ⓓ 35.2-42.7	Ⓓ 33.6-35.1 Ⓓ 35.2-41.1 ①

① May increase to 44.2 m with total panel coverage limited to 22.9 m camber type Ⓔ

CAMBER

Type	"x"	"y"
Ⓐ	38	51
Ⓑ	57	76
Ⓒ	70	102
Ⓓ	89	127
Ⓔ	114	152

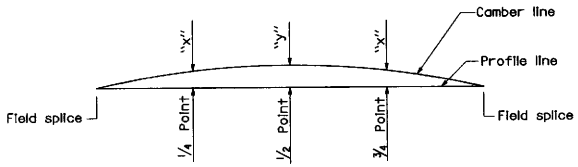

CAMBER DIAGRAM

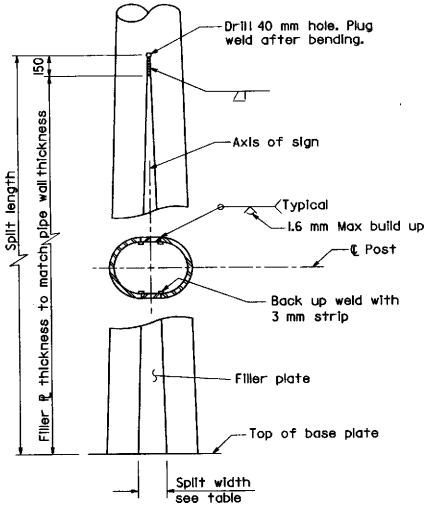

POST SPLIT DETAILS

NOTES

1. The maximum sign panel overlap onto elbow shall not exceed 1.83 m from the field splice.
2. For vertical post type, add 2.44 m to the vertical post span and enter the table for slanted post type. This adjusted span (vertical span +2.44 m) shall not exceed the maximum span shown on the table.
3. When several sign panels are to be installed with spaces between the panels the total sign panel length is the sum of the individual sign panel lengths only.
4. Maximum total sign panel coverage = 70% of slanted post span, 80% of vertical post span for spans up to 33.5 m above 33.5 m, varies on a straight line to 60% of vertical post span at 42.7 m.
5. All posts between base plate and field splice are extra strong pipe. All mast arms are standard pipe.
6. Before any portion of the sign frames are assembled in their final positions the Contractor shall demonstrate to the Engineer by preassembly or other approved methods that the span lengths of the frames in the no load condition match within 13 mm ± the field measured span lengths between foundations.
7. If the sign frames are erected as one unit, they shall be adequately suspended to avoid distortions or changes in span length between base plates.
8. At final position of post, all top and bottom anchor bolt nuts shall be wrench tightened against base plate.
9. Drill and tap for 1/2 NPS chase nipples and plug with recessed pipe plugs. Place perpendicular to sign panel axis and away from approaching traffic.
10. Maximum difference between post heights on an individual frame = 1.5 m.
11. For standard pipe members (Mast Arms) with lengths greater than 24 m an optional field splice will be permitted at ℄ of span to facilitate hauling operations.
12. NPS = Nominal Pipe Size.

STATE OF CALIFORNIA
DEPARTMENT OF TRANSPORTATION

OVERHEAD SIGNS-TUBULAR TWO POST TYPE LAYOUT AND PIPE SELECTION

NO SCALE

ALL DIMENSIONS ARE IN MILLIMETERS UNLESS OTHERWISE SHOWN

S40Q

STD. PLAN S40Q

Return to Table of Contents

DIST	COUNTY	ROUTE	KILOMETER POST TOTAL PROJECT	SHEET NO.	TOTAL SHEETS

Caltrans Metric

REGISTERED CIVIL ENGINEER

July 1, 1997
PLANS APPROVAL DATE

REGISTERED PROFESSIONAL ENGINEER Jeffrey B. Woody No. C41260 Exp. 3-31-99 CIVIL STATE OF CALIFORNIA

The State of California or its officers or agents shall not be responsible for the accuracy or completeness of electronic copies of this plan sheet.

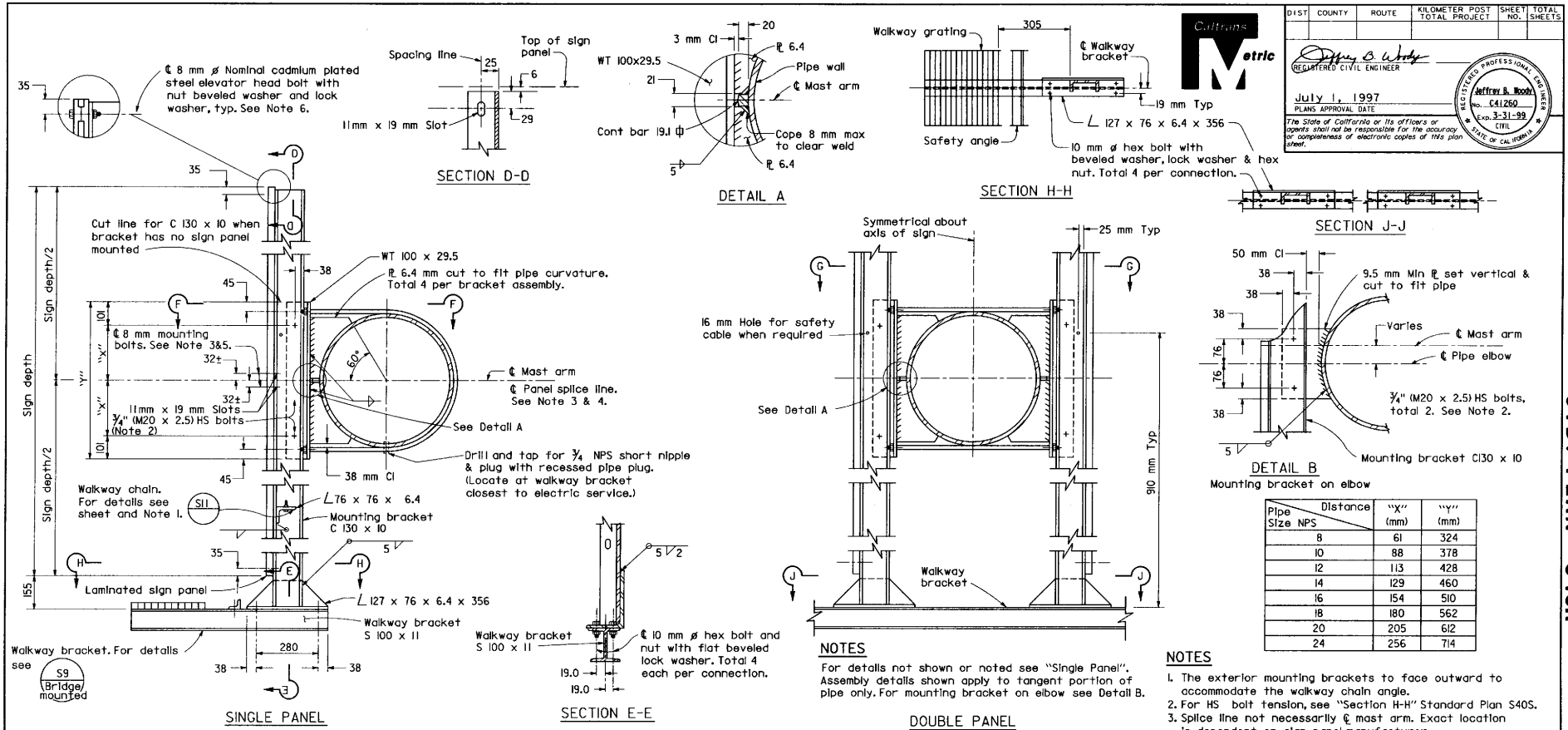

MOUNTING BRACKET ASSEMBLY DETAILS

NOTES

For details not shown or noted see "Single Panel". Assembly details shown apply to tangent portion of pipe only. For mounting bracket on elbow see Detail B.

Pipe Size NPS \ Distance	"X" (mm)	"Y" (mm)
8	61	324
10	88	378
12	113	428
14	129	460
16	154	510
18	180	562
20	205	612
24	256	714

NOTES

1. The exterior mounting brackets to face outward to accommodate the walkway chain angle.
2. For HS bolt tension, see "Section H-H" Standard Plan S40S.
3. Splice line not necessarily ℄ mast arm. Exact location is dependent on sign panel manufacturer.
4. Install aluminum "H" Section closure extrusions at vertical and horizontal sign panel splice lines.
5. Drill through panel at integral track. Install elevator bolt with Interstate green finish on head. Typical at panel splice.
6. Remove reflector. Drill through panel at integral track. Install elevator head bolt and attach reflector. Typical at border.

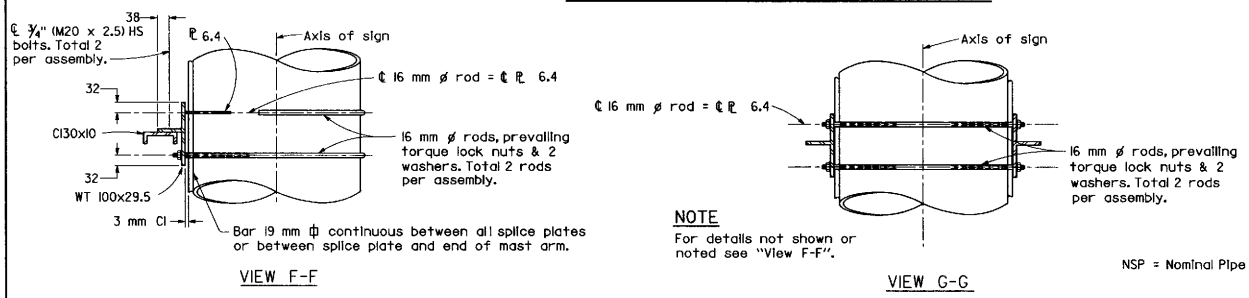

NOTE

For details not shown or noted see "View F-F".

NSP = Nominal Pipe Size

STATE OF CALIFORNIA
DEPARTMENT OF TRANSPORTATION

OVERHEAD SIGNS-TUBULAR STRUCTURAL FRAME DETAILS NO.1

NO SCALE

ALL DIMENSIONS ARE IN MILLIMETERS UNLESS OTHERWISE SHOWN

S40R

STD. PLAN S40R

Return to Table of Contents

DIST	COUNTY	ROUTE	KILOMETER POST TOTAL PROJECT	SHEET NO.	TOTAL SHEETS

REGISTERED CIVIL ENGINEER

July 1, 1997
PLANS APPROVAL DATE

REGISTERED PROFESSIONAL ENGINEER Jeffrey B. Woody No. C41260 Exp. 3-31-99 CIVIL STATE OF CALIFORNIA

The State of California or its officers or agents shall not be responsible for the accuracy or completeness of electronic copies of this plan sheet.

California Metric

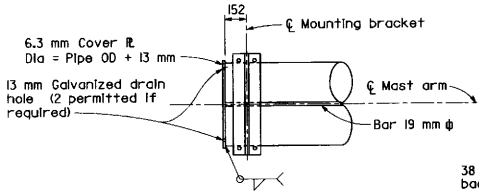

MAST ARM END DETAIL
(For "Single Post Type" only)

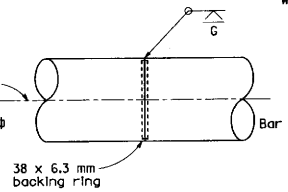

SHOP SPLICE

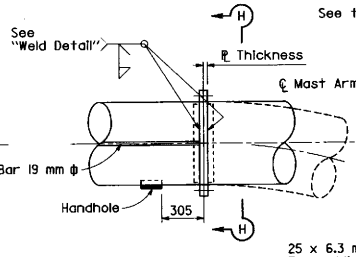

FIELD SPLICE

ATSM A-325 H.S. bolts (galvanized) equally spaced (Direct Tension Indicator Method)
Torque to tension of: 19 kip for 5/8" ø
28 kip for 3/4" ø
39 kip for 7/8" ø
See table and Note 5 for other details

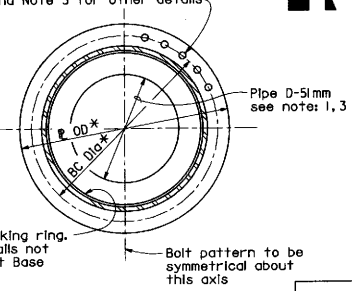

SECTION H-H

FIELD SPLICE				
Pipe Diameter NPS	ℙ Thickness mm	HS Bolts	* BC Diameter mm	* ℙ OD mm
8	29	13-5/8"(M16x2)	285	350
10	32	20-5/8"(M16x2)	340	405
12	32	17-3/4"(M20x2.5)	390	455
14	32	19-3/4"(M20x2.5)	420	485
16	32	22-3/4"(M20x2.5)	470	535
18	35	26-3/4"(M20x2.5)	520	585
20	35	29-3/4"(M20x2.5)	570	635
24	38	26-7/8"(M22x2.5)	690	780

* See note 4

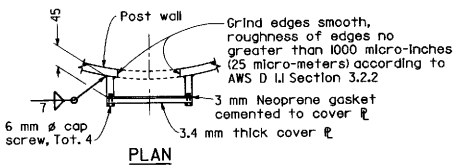

PLAN

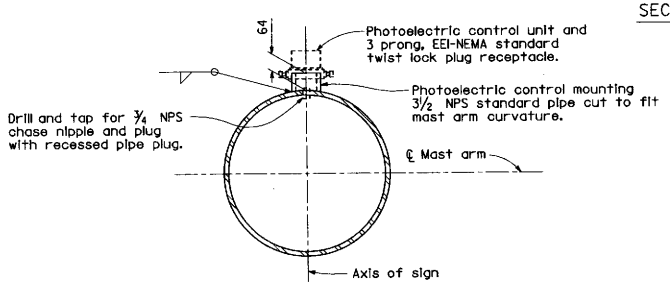

PHOTOELECTRIC CONTROL DETAILS
(See "Layout" sheet for location when required)

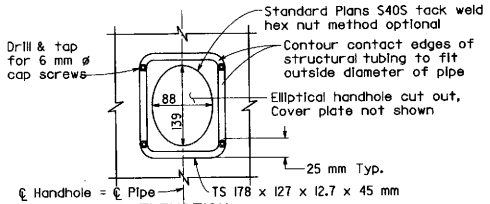

ELEVATION

TYPICAL DETAILS OF HANDHOLE AND COVER

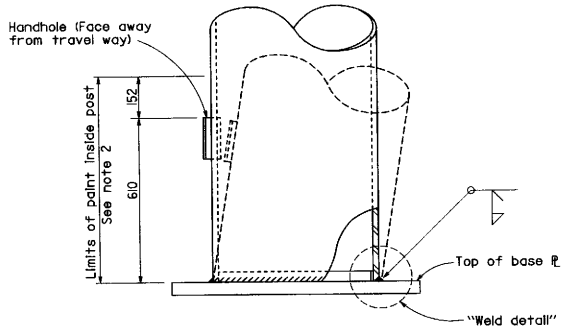

POST BASE ELEVATION
(For base ℙ details see "Foundation Details" sheet)

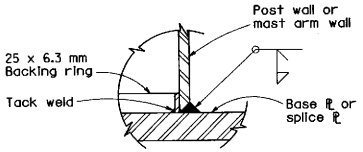

WELD DETAIL

NOTE

Design based on capacity of standard pipe.

NOTES

1. Place single thin bead of silicone caulking compound around hole prior to bolting. Caulking not to inerfere with friction between plates in bolted area.
2. Prime and paint post interior from base ℙ to 152 mm above lower handhole-unless post is galvanized.
3. "D" is inside diameters of "extra strong pipe".
4. Field splice diameters marked "*" may be increased 51mm to facilitate bolting.
5. For ASTM A-325M H.S. bolts, torque to tension: 91 kN for M16x2
   142 kN for M20x2.5
   176 kN for M22x2.5

NPS = Nominal Pipe Size

STATE OF CALIFORNIA
DEPARTMENT OF TRANSPORTATION

OVERHEAD SIGNS-TUBULAR STRUCTURAL FRAME DETAILS NO.2

NO SCALE

ALL DIMENSIONS ARE IN MILLIMETERS UNLESS OTHERWISE SHOWN

S40S

STD. PLAN S40S

Return to Table of Contents

DIST	COUNTY	ROUTE	KILOMETER POST TOTAL PROJECT	SHEET NO.	TOTAL SHEETS

REGISTERED CIVIL ENGINEER

July 1, 1997
PLANS APPROVAL DATE

The State of California or its officers or agents shall not be responsible for the accuracy or completeness of electronic copies of this plan sheet.

REGISTERED PROFESSIONAL ENGINEER Jeffrey B. Woody No. C41260 Exp. 3-31-99 CIVIL STATE OF CALIFORNIA

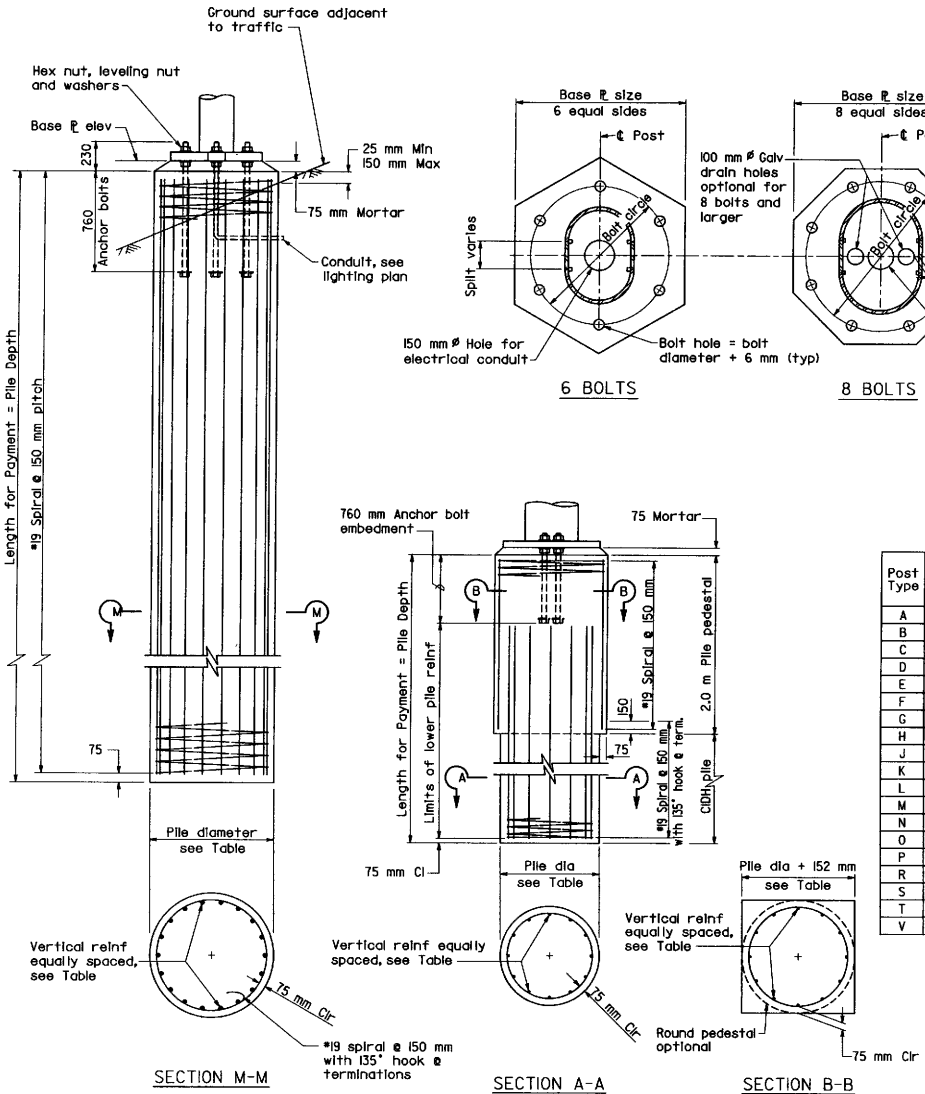

CIDH PILE FOUNDATION DETAILS

PEDESTAL / CIDH PILE FOUNDATION DETAILS

(CIDH denotes cast-in-drilled-hole)

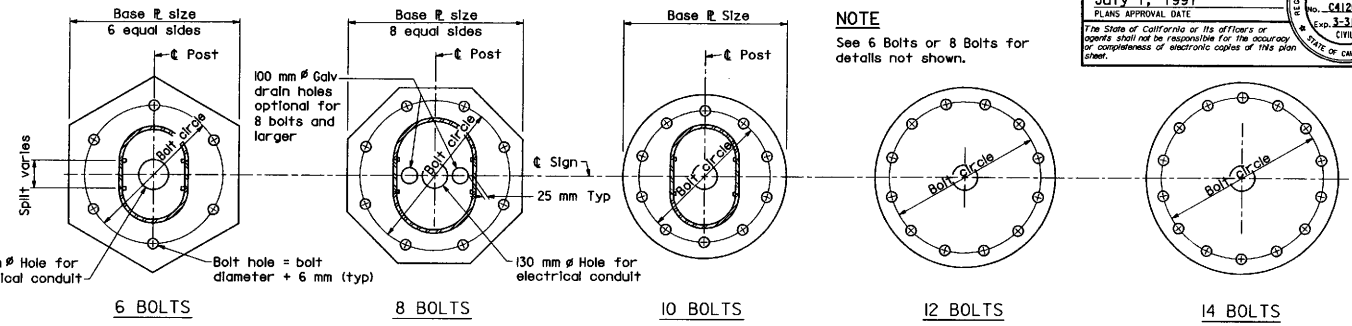

6 BOLTS 8 BOLTS 10 BOLTS 12 BOLTS 14 BOLTS

BASE PLATE DETAILS

NOTE

See 6 Bolts or 8 Bolts for details not shown.

Post Type	Nominal Pipe Size (NPS) See Note 6	Split mm	Base ℞ Size mm	Bolt Circle mm	Anchor Bolts Dia (mm)	Pile Dia (mm)	Vertical Reinf	Pile Depth meters
A	8 x-s	127	690 x 64	584	6-57	920P	8-#29	3.4
B	10 x-s	102	690 x 64	584	6-57	920P	8-#29	3.7
C	10 x-s	152	760 x 64	635	8-57	920P	11-#29	4.3
D	12 x-s	-	660 x 64	559	6-57	920P	8-#29	3.7
E	12 x-s	102	760 x 64	635	8-57	920P	11-#29	4.0
F	12 x-s	204	810 x 70	686	8-57	920P	12-#29	4.0
G	14 x-s	-	690 x 64	584	6-57	920P	8-#29	4.0
H	14 x-s	102	810 x 70	686	8-57	920P	12-#29	4.3
J	14 x-s	204	910 Dia x 70	737	10-57	920P	15-#29	5.2
K	16 x-s	-	760 x 64	635	8-57	920P	11-#29	4.3
L	16 x-s	102	910 Dia x 70	737	10-57	920P	15-#29	4.6
M	16 x-s	204	1020 Dia x 76	838	12-64	1070P	18-#29	7.3
N	18 x-s	-	810 x 70	686	8-57	920P	12-#29	5.2
O	18 x-s	127	1020 Dia x 76	838	12-64	1070P	18-#29	5.8
P	18 x-s	204	1020 Dia x 76	838	12-64	1070P	18-#29	6.7
R	20 x-s	-	910 Dia x 70	737	10-57	920P	15-#29	5.8
S	20 x-s	127	1020 Dia x 76	838	12-64	1070P	18-#29	6.7
T	24 x-s	-	1020 Dia x 76	838	12-64	1070P	18-#29	6.7
V	24 x-s	127	1070 Dia x 64	908	14-64	1070P	26-#29	6.7

NOTE P denotes pedestal

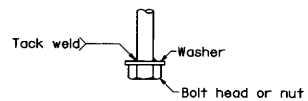

ANCHORAGE DETAIL

NOTES

1. Thread upper 250 mm and galvanize upper 300 mm of the anchor bolts.
2. Pile shall be placed against undisturbed material.
3. Provide bolt template during installation of anchor bolts.
4. Prior to erection of the post, backfill which is equivalent to the surrounding material shall be in place.
5. Pile shall be formed 150 mm minimum below ground surface.
6. Pipe sizes are based on ASTM A53 or A106. NPS = Nominal Pipe Size.

STATE OF CALIFORNIA
DEPARTMENT OF TRANSPORTATION

OVERHEAD SIGNS-TUBULAR FOUNDATION DETAILS

NO SCALE

ALL DIMENSIONS ARE IN MILLIMETERS UNLESS OTHERWISE SHOWN

S40T

STD. PLAN S40T

Return to Table of Contents

DIST	COUNTY	ROUTE	KILOMETER POST TOTAL PROJECT	SHEET NO.	TOTAL SHEETS

Caltrans Metric

Lea Kubel
REGISTERED ELECTRICAL ENGINEER

July 1, 1997
PLANS APPROVAL DATE

REGISTERED PROFESSIONAL ENGINEER Lea Kubel No. E6503 Exp. 9-30-98 ELECTRICAL STATE OF CALIFORNIA

The State of California or its officers or agents shall not be responsible for the accuracy or completeness of electronic copies of this plan sheet.

ELECTROLIERS

STANDARD TYPES
15 ROADWAY
15 STRUCTURE
21 STRUCTURE
22 ROADWAY
30 ROADWAY
31 ROADWAY
32 ROADWAY

Existing electrolier to remain in place unless otherwise specified or indicated.

Foundation for future electrolier (see project notes).

NOTES

1. Luminaires shall be 310-W HPS when installed on Type 21, 22, 30, 31 and 32 standards, unless otherwise specified. Luminaires shall be 200-W HPS when installed on all other type standards or poles, unless otherwise specified.
2. All Luminaires shall be the cutoff type, ANSI Type III medium cut off lighting distribution, unless otherwise specified.
3. Variations noted adjacent to symbol on project plans.

Electrolier (see project notes or project plans)

Luminaire on wood pole

ABBREVIATIONS AND EQUIPMENT DESIGNATIONS

PROPOSED	EXISTING	
AC+		An ungrounded conductor
AC-		A grounded conductor
AWG		American wire gage
C		Conduit
CCTV	cctv	Closed circuit television
CMS	cms	Changeable message sign
DLC	dlc	Loop detector lead-in cable
EMS	ems	Extinguishable message sign
EVC	evc	Emergency Vehicle Cable
FB	fb	Flashing beacon
FBCA	fbca	Flashing beacon control assembly
HAR	har	Highway advisory radio
HPS	hps	High pressure sodium
IISNS	iisns	Internally illuminated street name sign
LMA	lma	Luminaire mast arm
LPS	lps	Low pressure sodium
MC	mc	Mercury contactor
MER	mer	Mercury
MLC	mlc	Magnetometer detector lead-in cable
M/M	m/m	Multiple to multiple transformer
MT	mt	Conduit with pull wire or rope only
NC		Normally closed
NO		Normally open
PB	pb	Pull box
PEC	pec	Photoelectric control (Type I, II, III, IV or V as shown)
PED	ped	Pedestrian
PEU	peu	Photoelectric unit
PPB	ppb	Pedestrian push button
RIS		Radio Interference Suppressor
RM	rm	Ramp metering
SB	sb	Slip Base
SIC	sic	Signal interconnect cable
SMA	sma	Signal mast arm
S/M	s/m	Series to multiple transformer
SN		Solid neutral
SP	sp	Service point
TDC	tdc	Telephone demarcation cabinet
TMS		Traffic Monitoring Station
XFMR	xfmr	Transformer

SOFFIT AND WALL MOUNTED LUMINAIRES

Pendant, 70 W HPS unless otherwise specified.

Flush, 70 W HPS unless otherwise specified.

Wall surface, 70 W HPS unless otherwise specified.

Existing soffit or wall luminaire to remain unmodified.

Existing soffit or wall luminaire to be modified as specified.

NOTE

Arrow indicates "street side" of luminaire or glassware.

STANDARD NOTES

- AB — Abandon. If applied to conduit, remove conductors.
- BC — Install pull box in existing conduit run.
- BP — Pedestrian barricade, type as indicated on plan.
- CB — Install conduit into existing pull box.
- CC — Connect new and existing conduit. Remove existing conductors and install conductors as indicated.
- CF — Conduit to remain for future use. Remove conductors. Install pull wire or rope.
- DH — Detector handhole. Type A unless otherwise indicated.
- FA — Foundation to be abandoned.
- IS — Install State-furnished sign on signal mast arm.
- NS — No slip base on standard.
- PEC — Photoelectric control.
- PEU — Photoelectric unit.
- RC — Equipment or material to be removed and become the property of the contractor.
- RE — Remove electrolier, fuses and ballast. Tape ends of conductors.
- RL — Relocate equipment.
- RR — Remove and reuse equipment.
- RS — Remove and salvage equipment.
- SBI — Install slip base insert.
- SC — Splice new to existing conductors.
- SD — Service disconnect.
- SF — Standard to remain for future use. Remove luminaire, pole conductors, fuses and ballast. Tape disconnects.
- TSP — Telephone service point.

EQUIPMENT IDENTIFICATION

ILLUMINATED SIGN IDENTIFICATION NUMBER:

Sign No. 12345 — Sign number - Place on post or structure

10MER, SCI, 1.0 — Transformer rating (kVA); Sign control type; Number and type of fixtures — DO NOT place on standard or structure

ELECTROLIER OR EQUIPMENT IDENTIFICATION NUMBER:

12345 - 4.6 — Mast arm length in meters, if shown. Do not place on standard or structure.

12345 — Equipment number - Place on standard or structure. Existing equipment numbers are shown in parenthesis

CONDUIT AND CONDUCTOR IDENTIFICATION:

41C, 2#10, 15#14, 2DLC — Number and size of conductors and cables; Size of conduit in millimeters

Ø1, Ø2, Ø2P, etc. — Traffic phase identification for signal faces, detectors and phase diagrams

1, 2, 3 — Project note numbers

A, B, C — Equipment description, installation or item numbers

1, 2, 3 — Conduit run numbers

SIGNAL AND LIGHTING STANDARD (TYPICAL DESIGNATION):

19A - 3 - 113 — Wind velocity=113 km/h; Case 3 arm loading; Standard type

Standard Plan sheet number

Detail number or letter

STATE OF CALIFORNIA
DEPARTMENT OF TRANSPORTATION

SIGNAL, LIGHTING AND ELECTRICAL SYSTEMS SYMBOLS AND ABBREVIATIONS

NO SCALE

ALL DIMENSIONS ARE IN MILLIMETERS UNLESS OTHERWISE SHOWN

ES-1A

STD. PLAN ES-1A

Return to Table of Contents

DIST	COUNTY	ROUTE	KILOMETER POST TOTAL PROJECT	SHEET NO.	TOTAL SHEETS

Metric

REGISTERED ELECTRICAL ENGINEER

July 1, 1997
PLANS APPROVAL DATE

Les Kubel No. E6503 Exp. 9-30-98 ELECTRICAL — REGISTERED PROFESSIONAL ENGINEER — STATE OF CALIFORNIA

The State of California or its officers or agents shall not be responsible for the accuracy or completeness of electronic copies of this plan sheet.

CONDUIT

PROPOSED	EXISTING	
		Conduit-Lighting, unless Otherwise Indicated or Noted
		Traffic Signal Conduit
—C—	—c—	Communication Conduit
—S—	—s—	Sprinkler Control Conduit
—T—	—t—	Telephone Conduit
—F—	—f—	Fire Alarm Conduit
		Conduit Termination (Detail C, ES-7B in Structures)
R	r	Conduit Riser in Structure

SERVICE EQUIPMENT

PROPOSED	EXISTING	
OH	oh	Overhead Lines
u	U	Wood Pole "U" Indicates Utility Owned
		Pole Guy-with Anchor
		Pad Mount for Ground - Mounted Utility Transformer
III		Service Equipment Enclosure Type
		Service Equipment Enclosure Door Indicates Front of Enclosure
TDC	tdc	Telephone Demarcation Cabinet

POLE-MOUNTED SERVICE DESIGNATION

TYPE K - 8.8 m

Type of Installation

Pole Height above Grade

SIGN LIGHTING EQUIPMENT

PROPOSED	EXISTING	
		Overhead Sign-Single Post
		Overhead Sign-Two Post
		Overhead Sign-Mounted on Structure
		Overhead Sign with Roadway Electroller Attached
		Type I Standard-"Meter On" Sign

SIGNAL EQUIPMENT

PROPOSED	EXISTING	
		Pedestrian Signal
		Pedestrian Push Button Post
		Pedestrian Barricade
		Vehicle Signal Face, 3-Section: 200 mm Red, Yellow and Green Sections. 300 mm sections for SMA mounted.
		Vehicle Signal Face with Angle Visor
PV		Modifications of Basic Symbols: "L" Indicates All Non-Arrow Sections Louvered "LG" Indicates Louvered Green Section Only "PV" Indicates 300 mm Programmed Visibility Sections "300" Indicates all 300 mm Sections
		Vehicle Signal Face with Backplate
		Vehicle Signal Face with 300 mm Red, Yellow and Green Left Arrow Sections
		Vehicle Signal Face with 300 mm Red and Yellow Sections and 300 mm up Green Arrow
		Vehicle Signal Face (5-Section) with 300 mm Yellow and Green Right Arrows and 200 mm Red, Yellow and Green Sections
		Type I Standard and Attached Signals
		Standard with Signal Mast Arm Only and Attached Signals
		Left-Turn Signal and Sign Standard, Type 33
		Standard with Luminaire and Signal Mast Arms and Attached Signals
		Cantilever Flashing Beacons Type 9 Frame, unless Otherwise Specified or Indicated
R	Y	Flashing Beacon. One Signal Section with 300 mm Lens, backplate and Visor "R" Visor "R" Indicates Red Lens, "Y" Indicates Yellow Lens.
		Controller Assembly Door Indicates Front of Cabinet
		Guard Post

MISCELLANEOUS EQUIPMENT

PROPOSED	EXISTING	
		Closed Circuit Television
		Highway Advisory Radio

PULL BOXES

PROPOSED	EXISTING	
		Pull Box-No. 5 unless Otherwise Indicated or Noted as Below.
3	9A(2I)	Pull Box-Additional Designations or Descriptions

3 = No. 3½ Pull Box
5 = No. 5 Pull Box
6 = No. 6 Pull Box
7 = No. 7 (Ceiling Pull Box)
8 = No. 8 (Pendant Soffit Pull Box)
9 = No. 9 Pull Box
9A = No. 9A Pull Box

(C) = Communications Pull Box
(E) = Pull Box with Extension
(S) = Sprinkler Control Pull Box
(2I) = Anchor Bolts and Conduit for Future Installation of Type 2I Standard
(T) = Traffic Pull Box

VEHICLE DETECTORS

5 J 9 U

Vechicle Detector Designation

U = Upper
L = Lower

Slot Number in Input File

Input File (I or J)

Phase

PROPOSED	EXISTING	
		Inductive Loop Detector. Outline and Location of Sawcut Shown. (Type A Loop Illustrated)
		Magnetometer Detectors
		Magnetic Detector
	D	Pressure Detector. Subscript "D" Indicates Directional Type.
DH	dh	Detector Handhole Type A unless Otherwise Specified

STATE OF CALIFORNIA
DEPARTMENT OF TRANSPORTATION

SIGNAL, LIGHTING AND ELECTRICAL SYSTEMS SYMBOLS AND ABBREVIATIONS

NO SCALE

ALL DIMENSIONS ARE IN MILLIMETERS UNLESS OTHERWISE SHOWN

ES-1B

STD. PLAN ES-1B

Return to Table of Contents

DIST	COUNTY	ROUTE	KILOMETER POST TOTAL PROJECT	SHEET NO.	TOTAL SHEETS

Metric

Les Kubel
REGISTERED ELECTRICAL ENGINEER

July 1, 1997
PLANS APPROVAL DATE

REGISTERED PROFESSIONAL ENGINEER Les Kubel No. E6503 Exp. 9-30-98 ELECTRICAL STATE OF CALIFORNIA

The State of California or its officers or agents shall not be responsible for the accuracy or completeness of electronic copies of this plan sheet.

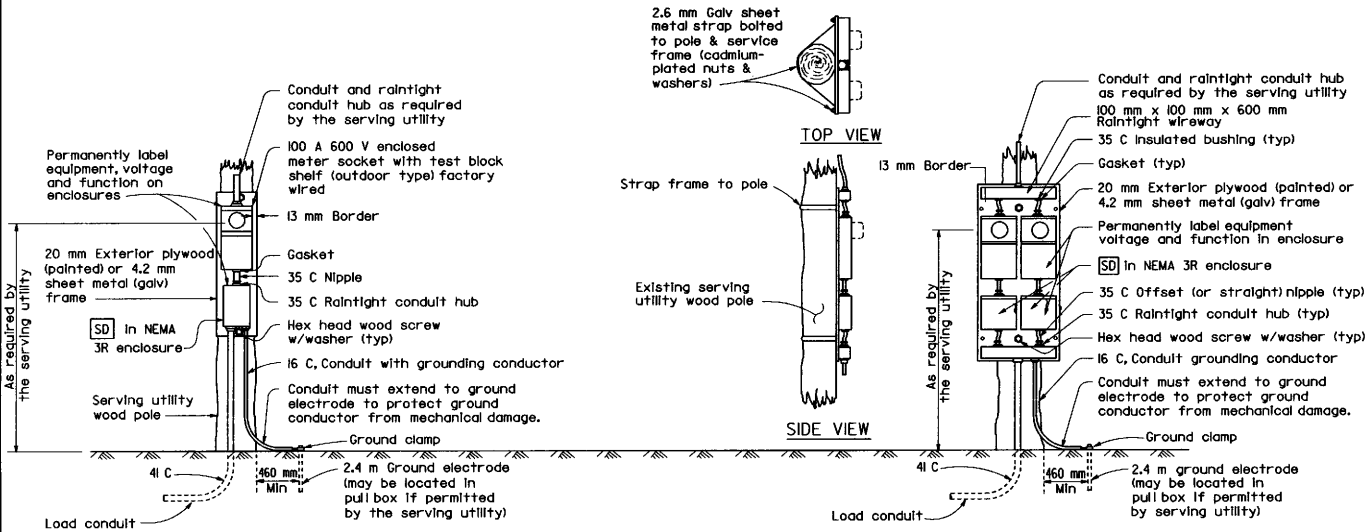

TYPE SCE-1 SERVICE

TYPE SCE-2 SERVICE

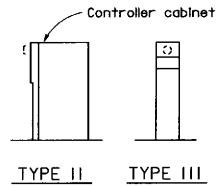

TYPES OF SERVICE (TYPICAL)

Type II service equipment enclosure mounted on side of a controller cabinet.

Type III complete free-standing service equipment enclosure.

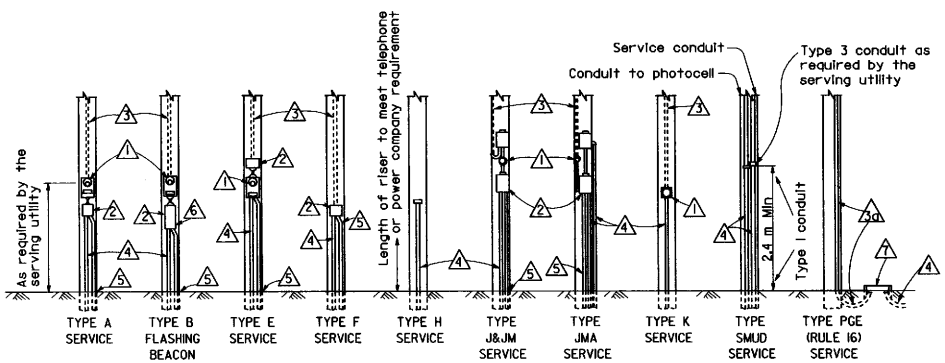

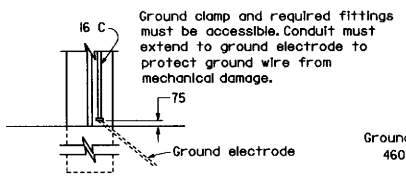

TYPE A

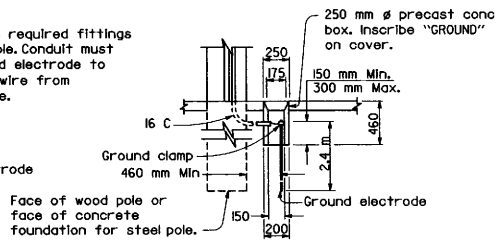

TYPE B

Use where serving utility requires 460 mm clearance between electrode and pole or service cabinet. Installation shown is for sidewalk or paved areas. In unpaved areas, omit special box and locate ground clamp above ground or locate ground clamp in nearest pull box.

SERVICE GROUNDING

NOTES

1. Meter socket
2. Service enclosure 60 A size minimum, unless otherwise shown.
3. (a) Utility owned pole. Service riser (and contactor with PEU where required) furnished and installed by the serving utility.
   (b) State owned pole. Service riser and all other required equipment furnished and installed by Contractor.
4. Conduit, length and size as required.
5. Ground conduit, 16 C, 1 #6 AWG bare copper. See "Service Grounding" detail.
6. Flashing beacon control assembly.
7. Service pull box [No.5 (E) unless otherwise noted] furnished and installed by Contractor. Exact location determined by the serving utility.

POLE MOUNTED SERVICE INSTALLATIONS

STATE OF CALIFORNIA
DEPARTMENT OF TRANSPORTATION

SIGNAL, LIGHTING AND ELECTRICAL SYSTEMS SERVICE EQUIPMENT

NO SCALE

ALL DIMENSIONS ARE IN MILLIMETERS UNLESS OTHERWISE SHOWN

ES-2A

STD. PLAN ES-2A

Return to Table of Contents

DIST	COUNTY	ROUTE	KILOMETER POST TOTAL PROJECT	SHEET NO.	TOTAL SHEETS

Caltrans Metric

Les Kubel
REGISTERED ELECTRICAL ENGINEER

July 1, 1997
PLANS APPROVAL DATE

REGISTERED PROFESSIONAL ENGINEER
Les Kubel
No. E6503
Exp. 9-30-98
ELECTRICAL
STATE OF CALIFORNIA

The State of California or its officers or agents shall not be responsible for the accuracy or completeness of electronic copies of this plan sheet.

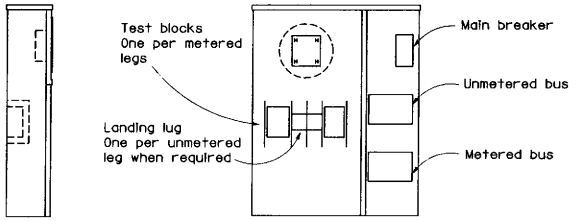

SIDE VIEW FRONT VIEW

TYPE II-A SERVICE EQUIPMENT ENCLOSURE

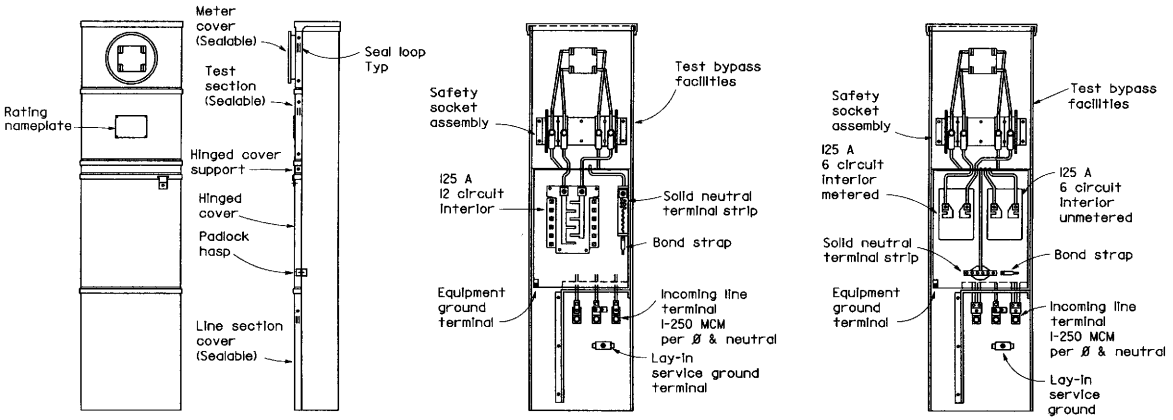

FRONT VIEW SIDE VIEW FRONT VIEW FRONT VIEW

(Less covers and deadfront) For metered circuits only

(Less covers and deadfront) For metered and unmetered circuits

TYPE II-B SERVICE EQUIPMENT ENCLOSURE

NOTES - TYPE II SERVICE EQUIPMENT ENCLOSURES

1. Service equipment enclosures and metering equipment shall meet the requirements of the serving utility. When the serving utility provides both metered and unmetered circuits, a separate bus shall be provided for each circuit.
2. Service equipment enclosures shall be factory wired and conform to NEMA Standards and to Section 86-2.11, "Service" of the Standard Specifications.
3. Service equipment enclosures shall be NEMA 3R construction and shall be provided with dead front panel and provisions for padlocking.
4. All control wiring shall be 600-V number 14 stranded machine tool wire. Where subject to flexing, 19 strand wire shall be used.
5. All main bus shall be rated for 125 A and shall be tin-plated copper.
6. An engraved phenolic nameplate on the dead front panel indicating the function of each circuit breaker or device, shall be installed with stainless steel rivets or stainless steel screws:
   a) Adjacent to the breaker or device. Character size shall be a minimum of 3 mm.
   b) At top of the exterior door panel indicating system number voltage level and number of phases. Character size shall be a minimum of 5 mm.
7. A plastic laminated wiring diagram shall be provided and attached to the inside of the front door.
8. In unpaved areas, a raised portland cement concrete pad of 600 mm x 100 mm x width of service enclosure foundation or controller cabinet foundation shall be constructed in front of Type II service equipment enclosures.
9. Internal bus, where shown, is typical only. Alternative designs of proposed service equipment enclosures shall be submitted to the Engineer for approval.
10. Circuit breakers may be mounted in the vertical or horizontal position.
11. Dimensions of service equipment enclosures shall meet the requirements of the serving utility.

STATE OF CALIFORNIA
DEPARTMENT OF TRANSPORTATION

SIGNAL, LIGHTING AND ELECTRICAL SYSTEMS SERVICE EQUIPMENT

NO SCALE

ALL DIMENSIONS ARE IN MILLIMETERS UNLESS OTHERWISE SHOWN

ES-2B

STD. PLAN ES-2B

Return to Table of Contents

DIST	COUNTY	ROUTE	KILOMETER POST TOTAL PROJECT	SHEET NO.	TOTAL SHEETS

Metric

Lee Kubel
REGISTERED ELECTRICAL ENGINEER

July 1, 1997
PLANS APPROVAL DATE

REGISTERED PROFESSIONAL ENGINEER
Lee Kubel
No. E6503
Exp. 9-30-98
ELECTRICAL
STATE OF CALIFORNIA

The State of California or its officers or agents shall not be responsible for the accuracy or completeness of electronic copies of this plan sheet.

NOTES-TYPE III SERVICE EQUIPMENT ENCLOSURES

1. Service Equipment Enclosure and metering equipment shall meet the requirements of the serving utility. When the serving utility provides both metered and unmetered circuits, a separate bus shall be provided for each circuit. The meter area shall have a sealable, lockable, raintight cover that can be removed without the use of tools.
2. Service Equipment Enclosures shall be factory wired and conform to NEMA Standards and to Section 86-2.11, "Service" of the Standard Specifications.
3. Dimensions of Service Equipment Enclosures shall meet the requirements of the serving utility.
4. The dead front panels on Type III-A Service Equipment Enclosures shall have a continuous stainless steel piano hinge. The panel in front of the breakers shall be secured with captive screws; the lower panel shall be secured with a latch or captive screws. No live parts shall be mounted on the dead front panel.
5. The exterior door shall have provisions for padlocking. The padlock hole shall be a minimum diameter of 11 mm.
6. Enclosures housing transformers of more than one (1) kVA shall have effective screened ventilation louvers of not less than 32 000 mm^2. Screen shall be stainless steel No. 304, with a No. 10 size mesh. Secure screen after painting with at least four bolts and frame.
7. Fasteners on the exterior of the enclosure shall be vandal-resistant and shall not be removable from the exterior. All screws, nuts, bolts and washers shall be stainless steel.
8. All terminals for incoming service conductors shall be compatible with either copper or aluminum conductors sized to suit the conductors shown on the plan. Terminal lugs shall be copper or tin-plated aluminum. Solid neutral terminal strip shall be rated for 125 A unless otherwise specified and for use with copper or aluminum conductors. The terminal shall include but not be limited to:
   a) Incoming terminals (landing lugs)
   b) Neutral lugs
   c) Solid neutral terminal strip
   d) Terminal strips for conductors within the enclosure.
9. At least 6 standard single pole circuit breaker spaces (20 mm nominal) shall be provided for branch circuits. Circuit breaker interiors shall be copper. Interiors shall accept plug-in or cable-in/cable-out circuit breakers.
10. All control wiring shall be 600-V No. 14 stranded machine tool wire. Where subject to flexing, 19 strand wire shall be used.
11. Main bus shall be rated for 125 A and shall be tin-plated copper.
12. A plastic laminated wiring diagram shall be provided with brass mounting eyelets and attached to the inside of the enclosure, or the wiring diagram shall be mounted to the interior of the door with an UL or ETL approved method.
13. An engraved phenolic nameplate on the dead front panel indicating the function of each circuit within the enclosure, shall be installed with stainless steel rivets or stainless steel screws:
    a) Adjacent to the breaker or device. Character size shall be a minimum of 3 mm.
    b) At top of the exterior door panel indicating system No., voltage level and number of phases. Character size shall be a minimum of 5 mm.
14. The plan shows the approximate location of devices within the enclosure. Components may be rearranged. However, the "working" clearances within the enclosure shall be maintained.
15. In unpaved areas a raised portland cement concrete pad 600 mm x 100 mm x width of foundation shall be constructed in front of new service installation. Pad shall be set to elevation of foundation.
16. Foundation shall extend 50 mm minimum beyond edge of enclosure.
17. Terminate conduits 50 mm maximum above top of foundation.
18. Internal bus, where shown, is typical only. Alternative design of proposed service equipment enclosure shall be submitted to the Engineer for approval.
19. Plug-in circuit breakers may be mounted in the vertical or horizontal position. Cable-in/cable-out circuit breakers shall be mounted in the vertical position.
20. On Type III-AF and Type III-BF Service Equipment Enclosure, the meter viewing windows are located on the front side of the Service Equipment Enclosure.
21. The Type III-AR and Type III-BR Service Equipment Enclosures shall be similarly constructed as Type III-AF and Type III-BF respectively, except the meter viewing window shall be located on the back side of the Service Equipment Enclosures.

STATE OF CALIFORNIA
DEPARTMENT OF TRANSPORTATION

SIGNAL, LIGHTING AND ELECTRICAL SYSTEMS SERVICE EQUIPMENT NOTES

NO SCALE

ALL DIMENSIONS ARE IN MILLIMETERS UNLESS OTHERWISE SHOWN

ES-2C

STD. PLAN ES-2C

Return to Table of Contents

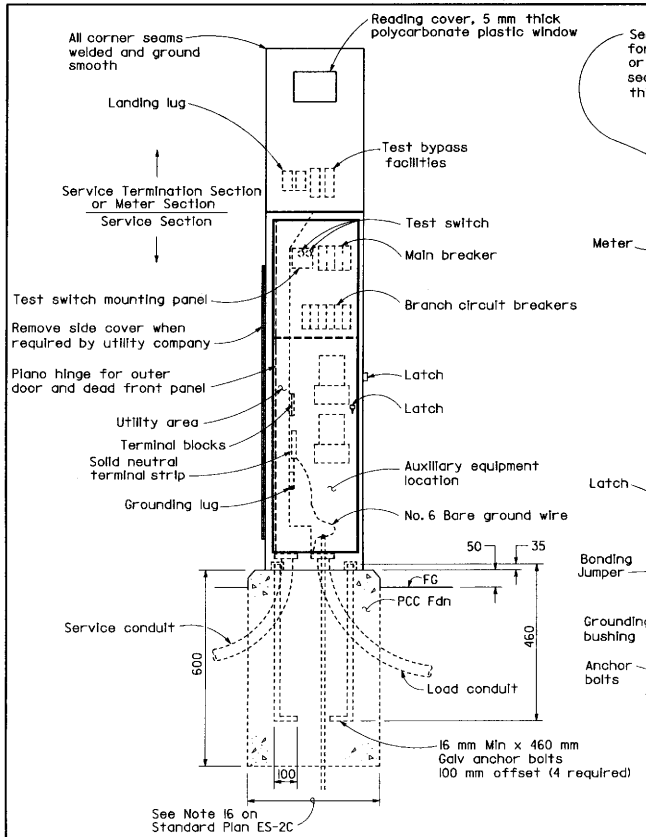

FRONT VIEW

TYPE III-AF SERVICE EQUIPMENT ENCLOSURE (TYPICAL)

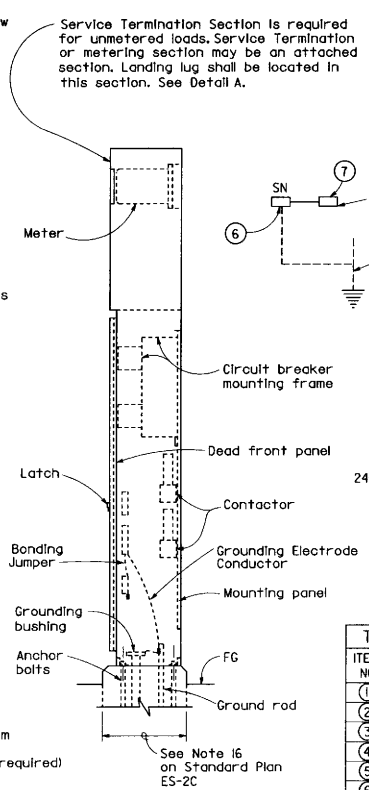

SIDE VIEW

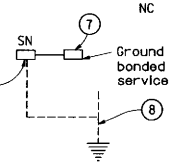

LEGEND

P	Pole
CB	Circuit Breaker
A	Ampere
V	Volt
M	Metered
UM	Unmetered
SN	Solid Neutral
NO	Normally Open
NC	Normally Closed

External Conductor
Tie Point
Conductor or Bus
Contactor coil
Contactor, Contact NO
Terminal Blocks
Contactor, Contact NC

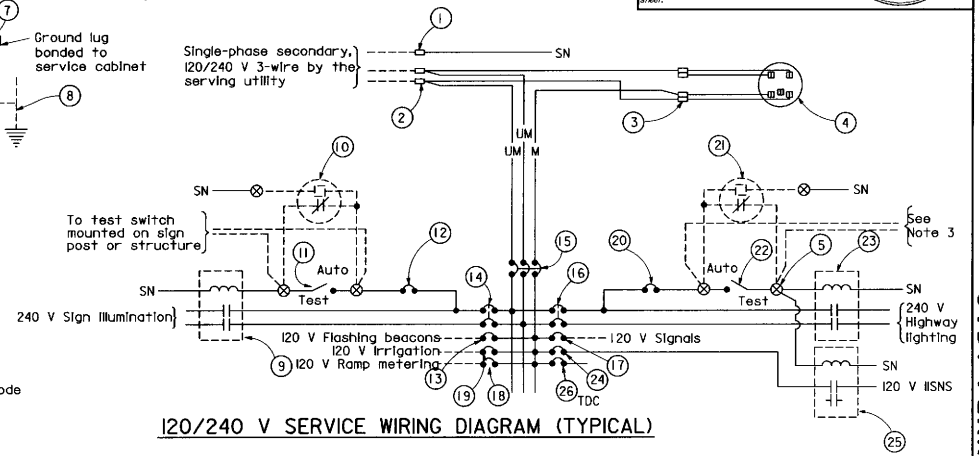

120/240 V SERVICE WIRING DIAGRAM (TYPICAL)

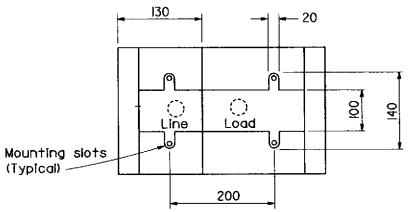

BASE FOR TYPE III-A SERVICE EQUIPMENT ENCLOSURE

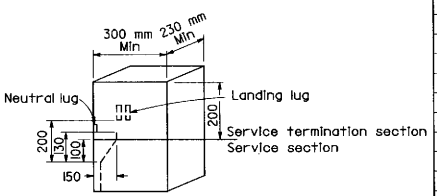

DETAIL A

TYPE III-A SERVICE (120/240 V) EQUIPMENT LEGEND

ITEM NO.	COMPONENT	NAME PLATE DESCRIPTION
1	Neutral Lug	
2	Landing Lug	
3	Test Bypass Facility	
4	Meter Socket and Support	
5	Terminal Blocks	
6	Solid Neutral Terminal Strip	
7	Ground Lug	
8	Ground Rod	
9	30 A, 2PNO Mercury Contactor	Sign Illumination
10	Photoelectric Unit	
11	15 A, IP, Test Switch	Sign Illumination Test Switch
12	15 A, 120 V, IP, CB	Sign Illumination Control
13	15 A, 120 V, IP, CB	Flashing Beacon
14	30 A, 240 V, 2P, CB	Sign Illumination
15	100 A, 240 V, 3P, CB	Main Breaker
16	30 A, 240 V, 2P, CB	Highway Lighting
17	50 A, 120 V, IP, CB	Signals
18	30 A, 120 V, IP, CB	Ramp Metering
19	20 A, 120 V, IP, CB	Irrigation
20	15 A, 120 V, IP, CB	Highway Lighting Control
21	Photoelectric Unit	
22	15 A, IP, Test Switch	Highway Lighting Test Switch
23	60 A, 2PNO Mercury Contactor	Highway Lighting
24	15 A, 120 V, IP, CB	IISNS
25	30 A, 2PNO Mercury Contactor	
26	20 A, 120 V, IP, CB	Telephone Demarcation Cabinet

NOTES

(FOR SERVICE EQUIPMENT)

1. Voltage ratings of service equipment shall conform to the service voltages indicated on the plans.
2. Unless otherwise indicated on the plans, all service equipment items shall be provided for each service equipment enclosure as shown.
3. Connect to remote test switch mounted on sign post or structure when required. Use "Lighting" in lieu of "Highway Lighting".
4. Item No. 1 and 6 shall be insulated from the cabinet.
5. Meter sockets shall be 5 clip type.

DIST	COUNTY	ROUTE	KILOMETER POST TOTAL PROJECT	SHEET NO.	TOTAL SHEETS

California Metric

REGISTERED ELECTRICAL ENGINEER

July 1, 1997
PLANS APPROVAL DATE

REGISTERED PROFESSIONAL ENGINEER Les Kubel No. E6503 Exp. 9-30-98 ELECTRICAL STATE OF CALIFORNIA

The State of California or its officers or agents shall not be responsible for the accuracy or completeness of electronic copies of this plan sheet.

STATE OF CALIFORNIA
DEPARTMENT OF TRANSPORTATION

SIGNAL, LIGHTING AND ELECTRICAL SYSTEMS SERVICE EQUIPMENT AND TYPICAL WIRING DIAGRAM TYPE A

NO SCALE

ALL DIMENSIONS ARE IN MILLIMETERS UNLESS OTHERWISE SHOWN

ES-2D

STD. PLAN ES-2D

Return to Table of Contents

DIST	COUNTY	ROUTE	KILOMETER POST TOTAL PROJECT	SHEET NO.	TOTAL SHEETS

Caltrans Metric

REGISTERED ELECTRICAL ENGINEER

July 1, 1997
PLANS APPROVAL DATE

Les Kubel No. E6503 Exp. 9-30-98 ELECTRICAL — REGISTERED PROFESSIONAL ENGINEER — STATE OF CALIFORNIA

The State of California or its officers or agents shall not be responsible for the accuracy or completeness of electronic copies of this plan sheet.

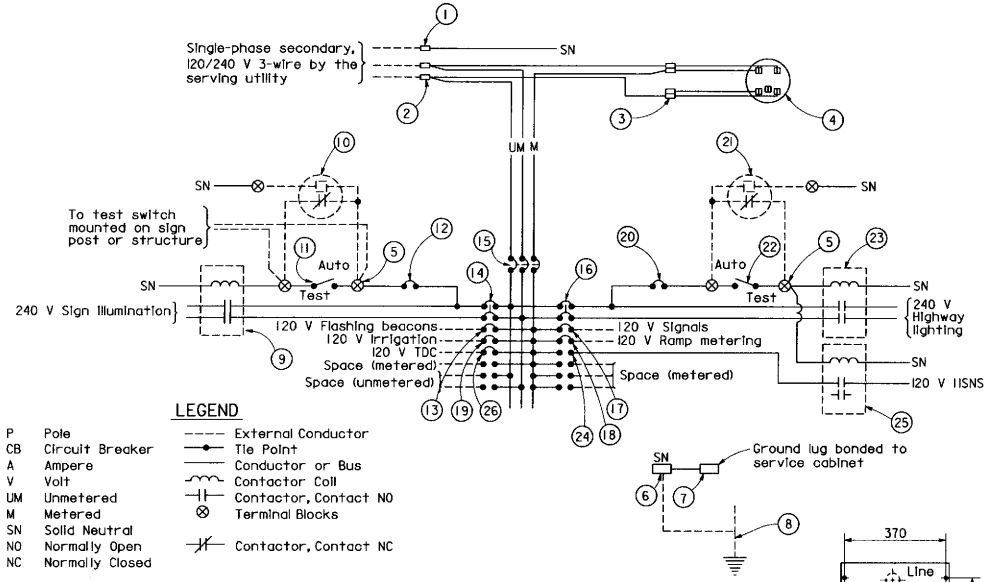

LEGEND

P	Pole	----	External Conductor
CB	Circuit Breaker	—●—	Tie Point
A	Ampere	——	Conductor or Bus
V	Volt	~~~	Contactor Coil
UM	Unmetered	⊣⊢	Contactor, Contact NO
M	Metered	⊗	Terminal Blocks
SN	Solid Neutral		
NO	Normally Open	⊣/⊢	Contactor, Contact NC
NC	Normally Closed		

120/240 V SERVICE WIRING DIAGRAM (TYPICAL)

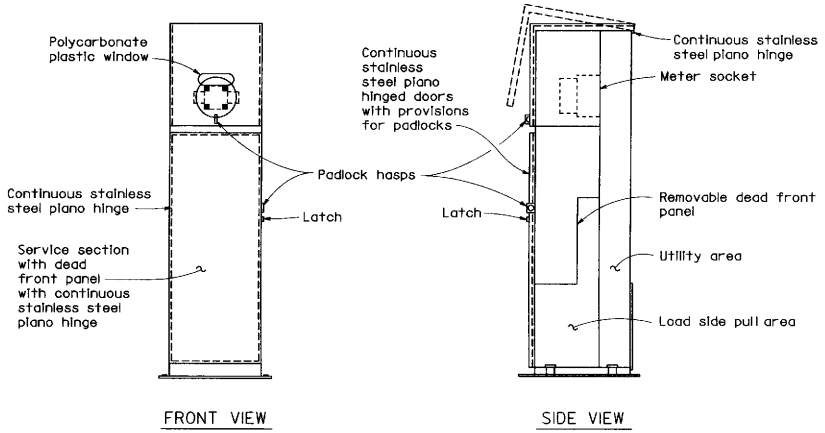

TYPE III-BF SERVICE EQUIPMENT ENCLOSURE WITH PROVISIONS FOR ONE 100 A METER (TYPICAL)

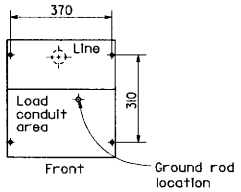

BASE FOR TYPE III-B SERVICE EQUIPMENT ENCLOSURE

TYPE III-B SERVICE (120/240 V) EQUIPMENT LEGEND		
ITEM NO.	COMPONENT	NAME PLATE DESCRIPTION
1	Neutral Lug	
2	Landing Lug	
3	Test Bypass Facility	
4	Meter Socket and Support	
5	Terminal Blocks	
6	Solid Neutral Terminal Strip	
7	Ground Lug	
8	Ground Rod	
9	30 A, 2PNO Contactor	Sign Illumination
10	Photoelectric Unit	
11	15 A, IP, Test Switch	Sign Illumination Test Switch
12	15 A, 120 V, IP, CB	Sign Illumination Control
13	15 A, 120 V, IP, CB	Flashing Beacon
14	30 A, 240 V, 2P, CB	Sign Lighting
15	100 A, 240 V, 3P, CB	Main Breaker
16	30 A, 240 V, 2P, CB	Highway Lighting
17	50 A, 120 V, IP, CB	Signals
18	30 A, 120 V, IP, CB	Ramp Metering
19	20 A, 120 V, IP, CB	Irrigation
20	15 A, 120 V, IP, CB	Highway Lighting Control
21	Photoelectric Unit	
22	15 A, IP, Test Switch	Highway Lighting Test Switch
23	60 A, 2PNO Contactor	Highway Lighting
24	15 A, 120 V, IP, CB	IISNS
25	30 A, 2PNO Contactor	
26	20 A, 120 V, IP, CB	Telephone Demarcation Cabinet

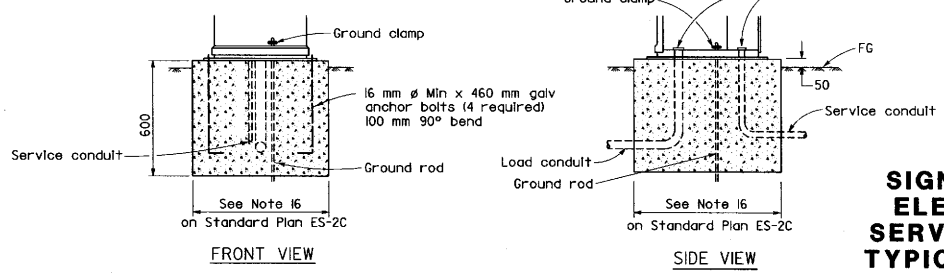

TYPE III-B SERVICE EQUIPMENT ENCLOSURE FOUNDATION DETAILS

NOTES

(FOR SERVICE EQUIPMENT)

1. Voltage ratings of service equipment shall conform to the service voltages indicated on the plans.
2. Unless otherwise indicated on the plans, all service equipment items shall be provided for each service equipment enclosure as shown.
3. Meter sockets shall be the 5 clip type.

STATE OF CALIFORNIA
DEPARTMENT OF TRANSPORTATION

SIGNAL, LIGHTING AND ELECTRICAL SYSTEMS SERVICE EQUIPMENT AND TYPICAL WIRING DIAGRAM TYPE B

NO SCALE

ALL DIMENSIONS ARE IN MILLIMETERS UNLESS OTHERWISE SHOWN

ES-2E

STD. PLAN ES-2E

Return to Table of Contents

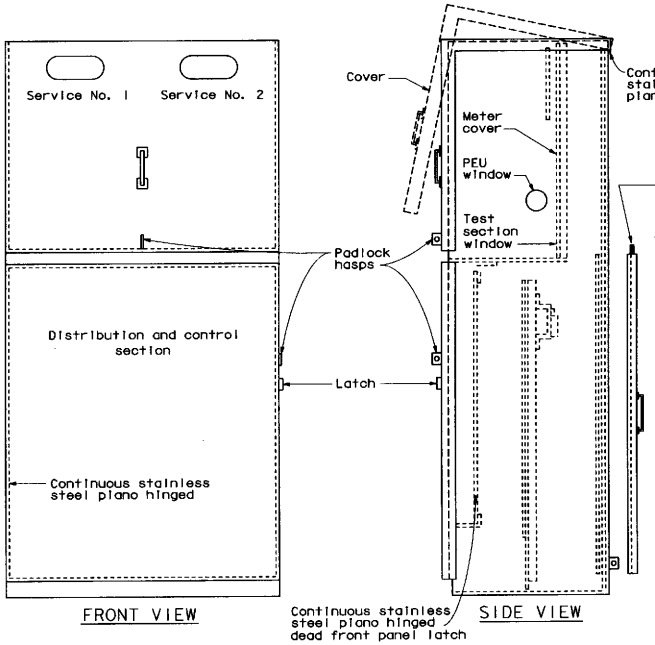

TYPE III-CF SERVICE EQUIPMENT ENCLOSURE WITH PROVISIONS FOR TWO 100 A METERS (TYPICAL)

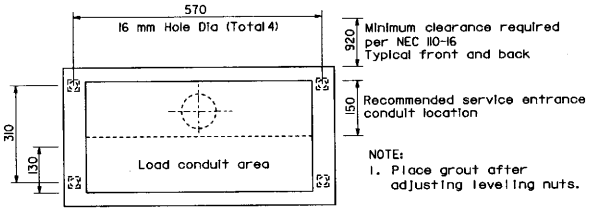

NOTE:
1. Place grout after adjusting leveling nuts.

BASE FOR TYPE III-C SERVICE EQUIPMENT ENCLOSURE

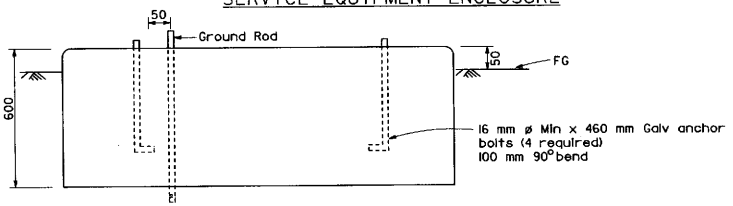

FOUNDATION DETAIL
(See Note 16 on Standard Plan ES-2C)

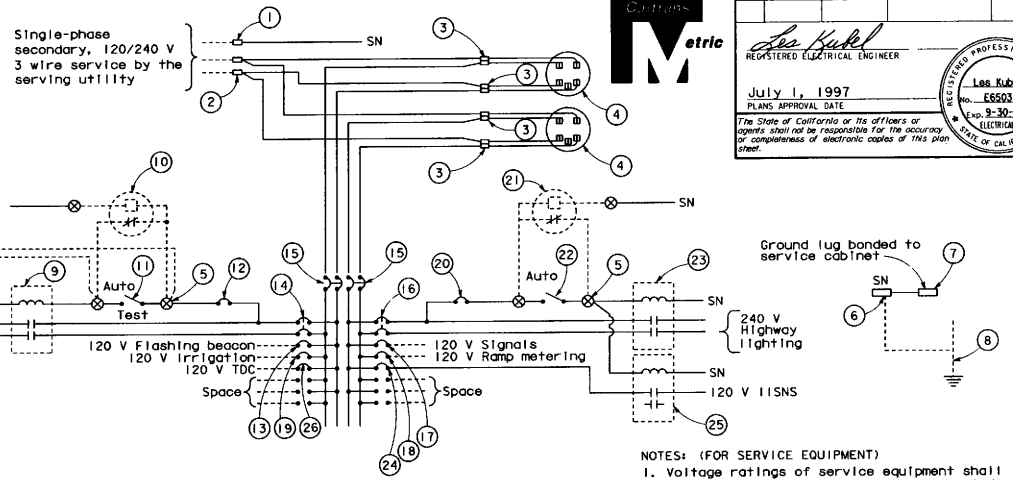

120/240V SERVICE WIRING DIAGRAM (TYPICAL)

NOTES: (FOR SERVICE EQUIPMENT)
1. Voltage ratings of service equipment shall conform to the service voltages indicated on the plans.
2. Unless otherwise indicated on the plans, all service equipment items shall be provided for each service equipment enclosure as shown.
3. Meter sockets shall be 5 Clip Type.

TYPE III-C SERVICE (120/240V) EQUIPMENT LEGEND

ITEM No.	COMPONENT	NAME PLATE DESCRIPTION	ITEM No.	COMPONENT	NAME PLATE DESCRIPTION
1	Neutral Lug		14	30 A, 240 V, 2P, CB	Sign Illumination
2	Landing Lug		15	100 A, 240 V, 2P, CB	Main Breaker
3	Test Bypass Facilitise		16	30 A, 240 V, 2P, CB	Highway Lighting
4	Meter Socket and Support		17	50 A, 120 V, 1P, CB	Signals
5	Terminal Blocks		18	30 A, 120 V, 1P, CB	Ramp Metering
6	Solid Neutral Terminal Strip		19	20 A, 120 V, 1P, CB	Irrigation
7	Ground Lug		20	15 A, 120 V, 1P, CB	Highway Lighting Control
8	Ground Rod		21	Photoelectric Unit	
9	30 A, 2PNO, Contactor	Sign Illumination	22	15 A, 1P, Test Switch	Highway Lighting Control
10	Photoelectric Unit		23	60 A, 2PNO Contactor	Highway Lighting
11	15 A, 1P, Test Switch	Sign Illumination Test Switch	24	15 A, 120 V, 1P, CB	IISNS
12	15 A, 120 V, 1P, CB	Sign Illumination Control	25	30 A, 2PNO Contactor	IISNS
13	15 A, 120 V, 1P, CB	Flashing Beacon	26	20 A, 120 V, 1P, CB	Telephone Demarcation Cabinet

LEGEND:

P	Pole	----	External Conductor
CB	Circuit Breaker	—•—	Tie Point
A	Ampere	——	Conductor or Bus
V	Volt	~~~	Contactor Coil
UM	Unmetered	⊣⊢	Contactor, Contact NO
M	Metered	⊗	Terminal Block
SN	Solid Neutral	⊣⊢	Contactor, Contact NC
NO	Normally Open		
NC	Normally Closed		

DIST	COUNTY	ROUTE	KILOMETER POST TOTAL PROJECT	SHEET NO.	TOTAL SHEETS

REGISTERED ELECTRICAL ENGINEER
July 1, 1997
PLANS APPROVAL DATE
Les Kubel No. E6503 Exp. 9-30-98 ELECTRICAL
REGISTERED PROFESSIONAL ENGINEER STATE OF CALIFORNIA

The State of California or its officers or agents shall not be responsible for the accuracy or completeness of electronic copies of this plan sheet.

STATE OF CALIFORNIA
DEPARTMENT OF TRANSPORTATION

SIGNAL, LIGHTING AND ELECTRICAL SYSTEMS SERVICE EQUIPMENT AND TYPICAL WIRING DIAGRAM TYPE C

NO SCALE

ALL DIMENSIONS ARE IN MILLIMETERS UNLESS OTHERWISE SHOWN

ES-2F

STD. PLAN ES-2F

Return to Table of Contents

DIST	COUNTY	ROUTE	KILOMETER POST TOTAL PROJECT	SHEET NO.	TOTAL SHEETS

California Metric

Les Kubel
REGISTERED ELECTRICAL ENGINEER

July 1, 1997
PLANS APPROVAL DATE

REGISTERED PROFESSIONAL ENGINEER
Les Kubel
No. E6503
Exp. 9-30-98
ELECTRICAL
STATE OF CALIFORNIA

The State of California or its officers or agents shall not be responsible for the accuracy or completeness of electronic copies of this plan sheet.

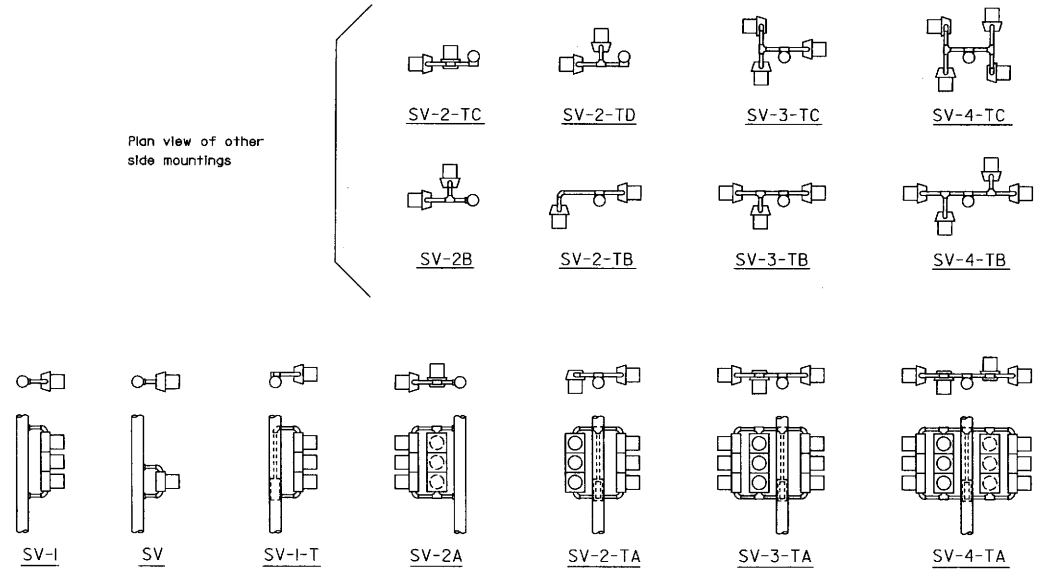

SIDE MOUNTINGS

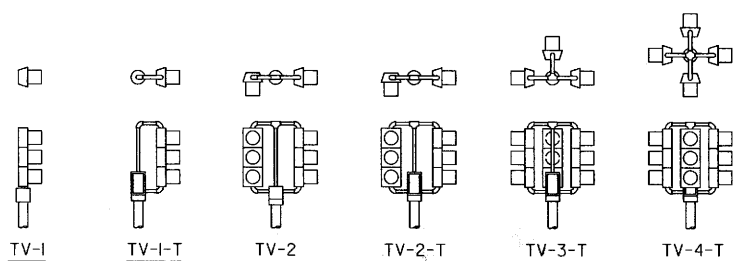

TOP MOUNTINGS

VEHICULAR SIGNALS AND MOUNTINGS

ABBREVIATIONS

TV	Top mounted vehicle signals
SV	Side mounted vehicle signals
T	Terminal compartment
1,2,3,4	Number of signal faces (3 - section, unless otherwise indicated)

NOTES

1. Mountings shall be oriented to provide maximum horizontal clearance to adjacent roadway.
2. Bracket arms shall be long enough to permit proper alignment of signals and backplate installation.
3. See Standard Plans ES-3D and ES-3E for attachment fitting details.
4. All arrow indications shall be 300 mm.
5. All programmed visibility signal heads shall be provided with backplates.

STATE OF CALIFORNIA
DEPARTMENT OF TRANSPORTATION

SIGNAL, LIGHTING AND ELECTRICAL SYSTEMS SIGNAL HEADS AND MOUNTINGS

NO SCALE

ALL DIMENSIONS ARE IN MILLIMETERS UNLESS OTHERWISE SHOWN

ES-3A

Return to Table of Contents

DIST	COUNTY	ROUTE	KILOMETER POST TOTAL PROJECT	SHEET NO.	TOTAL SHEETS

REGISTERED ELECTRICAL ENGINEER

July 1, 1997
PLANS APPROVAL DATE

Les Kubel
No. E6503
Exp. 9-30-98
ELECTRICAL
REGISTERED PROFESSIONAL ENGINEER
STATE OF CALIFORNIA

The State of California or its officers or agents shall not be responsible for the accuracy or completeness of electronic copies of this plan sheet.

Metric

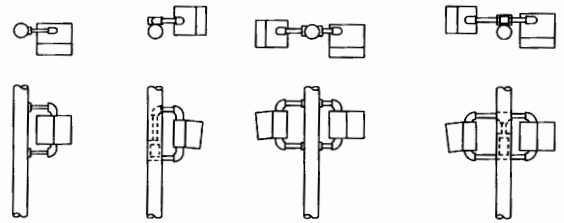

SP-1 SP-1-T SP-2 SP-2-T

SIDE MOUNTINGS

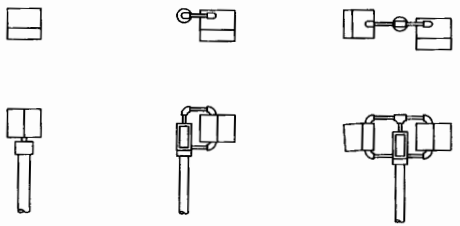

TP-1 TP-1-T TP-2-T

TOP MOUNTINGS

PEDESTRIAN SIGNALS AND MOUNTINGS

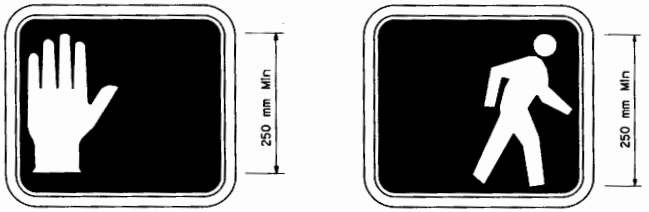

PEDESTRIAN SIGNAL FACE

SYMBOL TYPE

NOTES

1. Mounting shall be oriented to provide maximum horizontal clearance to adjacent roadway.
2. Pedestrian signals shall be positioned on the side of standard nearest crosswalk controlled.
3. Bracket arms shall be long enough to permit proper alignment of signals.
4. See Standard Plans ES-3D and ES-3E for attachment fittings details.

ABBREVIATIONS

TP	Top mounted pedestrian signal
SP	Side mounted pedestrian signal
T	Terminal compartment
1,2	Number of signal faces

STATE OF CALIFORNIA
DEPARTMENT OF TRANSPORTATION

SIGNAL, LIGHTING AND ELECTRICAL SYSTEMS SIGNAL HEADS AND MOUNTINGS

NO SCALE

ALL DIMENSIONS ARE IN MILLIMETERS UNLESS OTHERWISE SHOWN

ES-3B

STD. PLAN ES-3B

Return to Table of Contents

DIST	COUNTY	ROUTE	KILOMETER POST TOTAL PROJECT	SHEET NO.	TOTAL SHEETS

California Metric

Les Kubel
REGISTERED ELECTRICAL ENGINEER

July 1, 1997
PLANS APPROVAL DATE

REGISTERED PROFESSIONAL ENGINEER Les Kubel No. E6503 Exp. 9-30-98 ELECTRICAL STATE OF CALIFORNIA

The State of California or its officers or agents shall not be responsible for the accuracy or completeness of electronic copies of this plan sheet.

VISORS

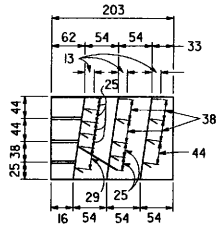

SECTION A-A

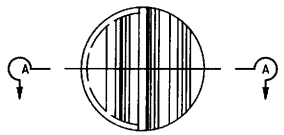

FRONT VIEW

DIRECTIONAL LOUVER

Directional louvers shall be oriented as directed by the Engineer and secured in place with one plated brass machine screw and nut.

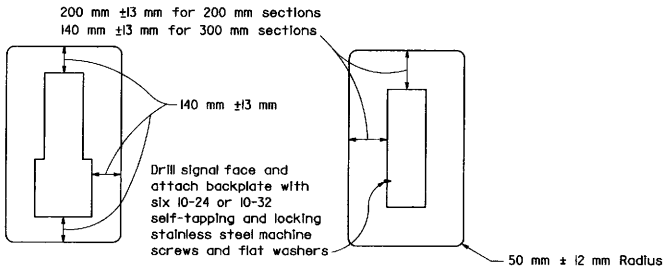

FOR COMBINATION 200 mm AND 300 mm SECTIONS

FOR 200 mm AND 300 mm SECTIONS

BACKPLATE

1.5 mm minimum thickness
3001-14 aluminum, or plastic when specified

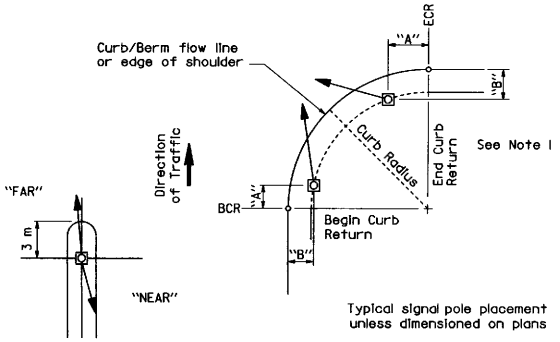

Typical signal pole placement unless dimensioned on plans

SIGNAL STANDARD PLACEMENT DIMENSIONS AND EQUIPMENT LOCATIONS

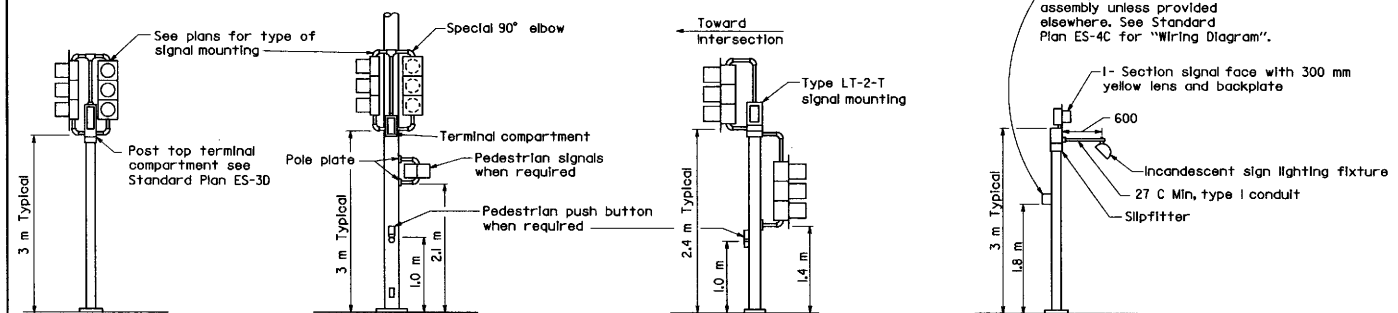

TOP MOUNTED SIGNALS (TV)

Type 1-A, 1-B, 1-C and 1-D standard as indicated on the plans

SIDE MOUNTED SIGNALS (SV AND SP)

Normally used on standards with luminaire and/or signal mast arm

LEFT TURN LANE SIGNAL

Type 1-A, 1-B, 1-C and 1-D standard as indicated on the plans

ADVANCE FLASHING BEACON INSTALLATION

Type 1-A, 1-B, 1-C and 1-D standard as indicated on the plans

TYPICAL SIGNAL INSTALLATIONS

NOTE

1. For "A" and "B" dimensions, see Pole Schedule, or as directed by the Engineer.

ABBREVIATIONS

LT = Left turn signals

STATE OF CALIFORNIA
DEPARTMENT OF TRANSPORTATION

SIGNAL, LIGHTING AND ELECTRICAL SYSTEMS SIGNAL HEADS AND MOUNTINGS

NO SCALE

ALL DIMENSIONS ARE IN MILLIMETERS UNLESS OTHERWISE SHOWN

ES-3C

STD. PLAN ES-3C

Return to Table of Contents

DIST	COUNTY	ROUTE	KILOMETER POST TOTAL PROJECT	SHEET NO.	TOTAL SHEETS

Caltrans Metric

Lea Kubel
REGISTERED ELECTRICAL ENGINEER

July 1, 1997
PLANS APPROVAL DATE

REGISTERED PROFESSIONAL ENGINEER Lea Kubel No. E6503 Exp. 9-30-98 ELECTRICAL STATE OF CALIFORNIA

The State of California or its officers or agents shall not be responsible for the accuracy or completeness of electronic copies of this plan sheet.

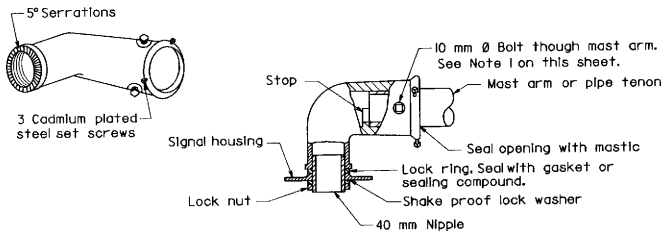

MAST ARM MOUNTING - TYPE "MAT"

For 2 NPS pipe see Note 1 on this sheet.

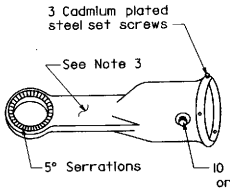

MAST ARM MOUNTING

TYPE "MAS"

For 2 NPS pipe see Note 1 on this sheet.

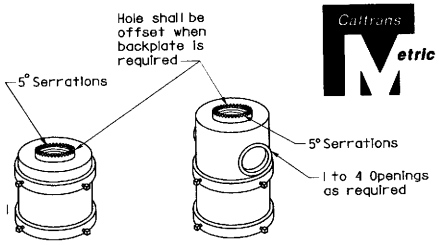

For one-way mounting — For multiple mountings

TOP MOUNTING

For 4 NPS pipe see Note 2 on this sheet.

SIGNAL SLIP FITTERS

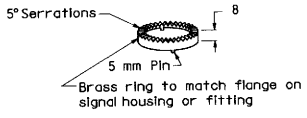

LOCK RING

Use where locking ring is not integral with signal housing or fitting.

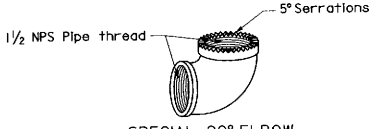

SPECIAL 90° ELBOW

One for each face, except those with special slip fitter mounting.

MISCELLANEOUS MOUNTING HARDWARE

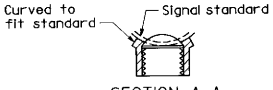

SECTION A-A

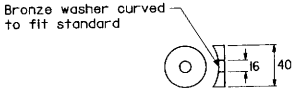

WASHER DETAIL "C"

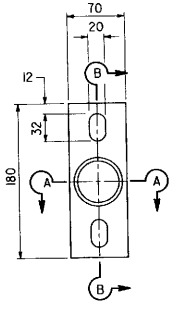

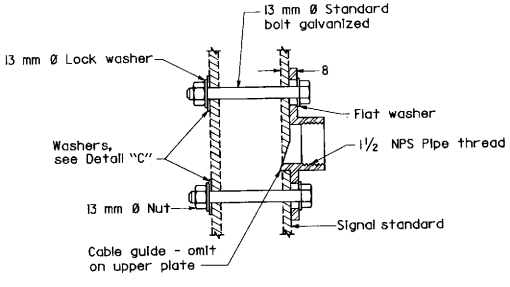

SECTION B-B

POLE PLATE

For side mountings.

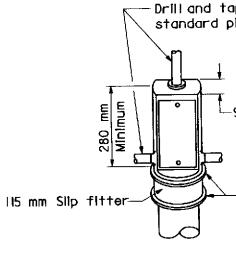

TOP MOUNTING

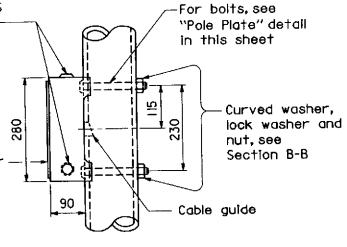

SIDE MOUNTING

TERMINAL COMPARTMENTS

NOTES

1. After mast arm signal has been plumbed and secured, drill 11 mm hole through mast arm in line with slip fitter hole. Place a 10 mm ø galvanized bolt with washer under bolt head through hole and secure with washer, nut, and locknut. Seal openings between MAS, MAT or MAS-5 mountings and mast arm.
2. (a) Threaded top mounted slip fitter openings shall be 1½ IPS.
   (b) Serrations in fittings shall match those on bottom of signal heads or in lock ring.
   (c) Top opening shall be offset when backplate is used.
3. Wireway shall have a cross section area of 600 mm² minimum. Minimum width of 13 mm.

STATE OF CALIFORNIA
DEPARTMENT OF TRANSPORTATION

SIGNAL, LIGHTING AND ELECTRICAL SYSTEMS SIGNAL HEADS AND MOUNTINGS

NO SCALE

ALL DIMENSIONS ARE IN MILLIMETERS UNLESS OTHERWISE SHOWN

ES-3D

STD. PLAN ES-3D

Return to Table of Contents

DIST	COUNTY	ROUTE	KILOMETER POST TOTAL PROJECT	SHEET NO.	TOTAL SHEETS

Les Kubel
REGISTERED ELECTRICAL ENGINEER

July 1, 1997
PLANS APPROVAL DATE

REGISTERED PROFESSIONAL ENGINEER Les Kubel No. E6503 Exp. 9-30-98 ELECTRICAL STATE OF CALIFORNIA

The State of California or its officers or agents shall not be responsible for the accuracy or completeness of electronic copies of this plan sheet.

California Metric

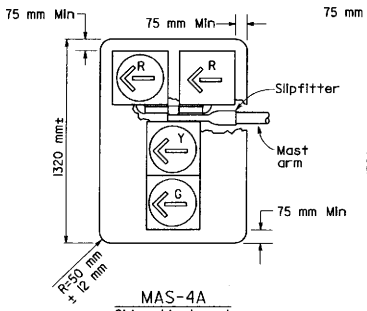

MAS-4A
Side attachment

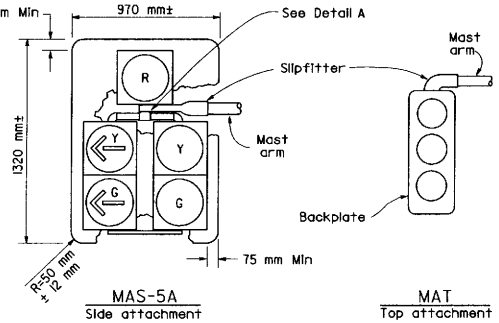

MAS-5A
Side attachment

MAT
Top attachment

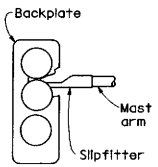

MAS
Side attachment

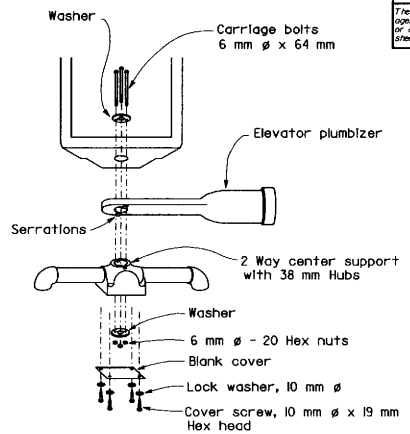

DETAIL A

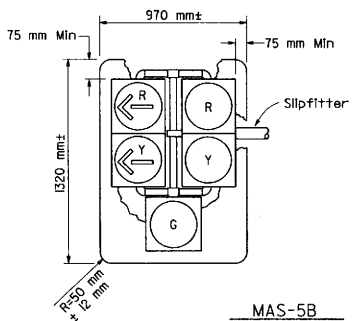

MAS-5B
Side attachment

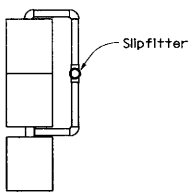

SIDE VIEW

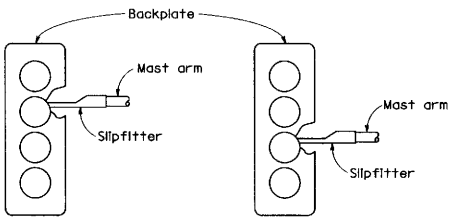

MAS-4B
Side attachment

MAS-4C
Side attachment

MAST ARM MOUNTINGS

NOTES

1. All arrow indications and all mast arm indications shall be 300 mm.
2. All mast arm mounted signal heads and all programmed visibility signal heads shall be provided with backplates.

ABBREVIATIONS

MAT	Mast Arm mounted vehicle signals Top attachment.
MAS	Mast Arm mounted vehicle signals Side attachment.
MAS-4A MAS-4B MAS-4C	Mast Arm mounted vehicle signals Side attachment - 4 signal sections.
MAS-5	Mast Arm mounted vehicle signals Side attachment - 5 signal sections.

STATE OF CALIFORNIA
DEPARTMENT OF TRANSPORTATION

SIGNAL, LIGHTING AND ELECTRICAL SYSTEMS SIGNAL HEADS AND MOUNTINGS

NO SCALE

ALL DIMENSIONS ARE IN MILLIMETERS UNLESS OTHERWISE SHOWN

ES-3E

Return to Table of Contents

DIST	COUNTY	ROUTE	KILOMETER POST TOTAL PROJECT	SHEET NO.	TOTAL SHEETS

California Metric

REGISTERED ELECTRICAL ENGINEER

July 1, 1997
PLANS APPROVAL DATE

REGISTERED PROFESSIONAL ENGINEER Les Kubel No. E6503 Exp. 9-30-98 ELECTRICAL STATE OF CALIFORNIA

The State of California or its officers or agents shall not be responsible for the accuracy or completeness of electronic copies of this plan sheet.

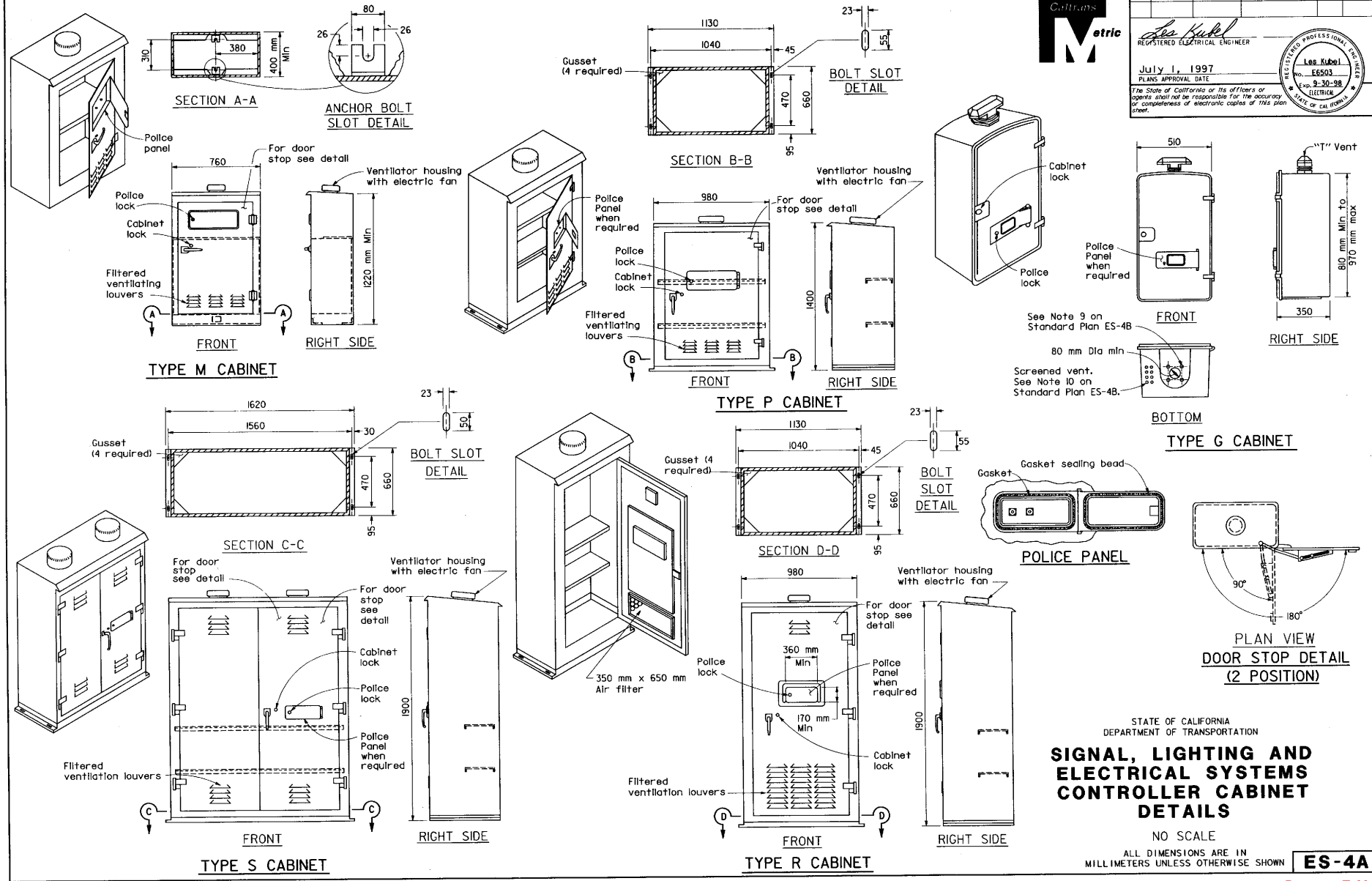

STATE OF CALIFORNIA
DEPARTMENT OF TRANSPORTATION

SIGNAL, LIGHTING AND ELECTRICAL SYSTEMS CONTROLLER CABINET DETAILS

NO SCALE

ALL DIMENSIONS ARE IN MILLIMETERS UNLESS OTHERWISE SHOWN

ES-4A

STD. PLAN ES-4A

Return to Table of Contents

DIST	COUNTY	ROUTE	KILOMETER POST TOTAL PROJECT	SHEET NO.	TOTAL SHEETS

Caltrans Metric

REGISTERED ELECTRICAL ENGINEER

July 1, 1997
PLANS APPROVAL DATE

REGISTERED PROFESSIONAL ENGINEER — Les Kubel — No. E6503 — Exp. 9-30-98 — ELECTRICAL — STATE OF CALIFORNIA

The State of California or its officers or agents shall not be responsible for the accuracy or completeness of electronic copies of this plan sheet.

NOTES - CONTROLLER CABINETS

1. All cabinet dimensions are nominal.
2. Foundations shall be located to provide 600 mm minimum clearance between face of curb and any portion of cabinet.
3. Type G, M, 336, P, R and S cabinets shall be installed with the back toward the nearest lane of traffic.
4. The controller cabinet grounding bus shall be bonded to conduit or equipment grounding conductor.
5. In unpaved areas, a raised Portland cement concrete pad shall be constructed in front of each controller cabinet. Pad shall be 900 mm x 900 mm x 100 mm for Type G cabinets and shall be 900 mm x 100 mm thick x width of foundation for Type M, 336, P, R, and S cabinets.
6. In unpaved areas, the top of foundation for Type G, P, R and S cabinets shall be 150 mm above surrounding grade. Top of foundation for Type M or 336 cabinet shall be 460 mm above surrounding grade.
7. In sidewalks and other paved areas, top of foundation for Type G cabinet shall be level with surrounding grade. Top of foundation for Type P, R, and S cabinets shall be 90 mm above surrounding grade.
8. The steel pedestal, base plate, bolt circle and foundation for Type G cabinet shall be the same as that shown for a Type I-C standard. Pedestal shall be 640 mm-760 mm in length. Anchor bolts shall be 19 mm ø x 460 mm with a 50 mm-90° bend. Four bolts required per cabinet.
9. Type G cabinet shall be provided with a slipfitter to permit mounting on 114 mm outside diameter pedestal. Slipfitter shall be bolted to bottom of the cabinet.
10. Type G cabinet shall be provided with 8 screened, raintight holes, 13 mm diameter or larger, in the bottom of the cabinet.
11. A 25 mm drain shall be provided through the foundation of a Type M or 336 cabinet. Drain pipe shall be screened.
12. See Table for cabinet and foundation dimensions; "D"-Depth, "H"-Height, "W"-Width. See Table for anchor bolt spacing; "D"-Depth, "W"-Width.
13. All cabinet shelves shall be adjustable for vertical spacing and shall be removable. Type M, P, R and S cabinets shall be provided with a minimum of two shelves.
14. Anchor bolts for Type M, 336, P, R, and S cabinets shall be 19 mm ø x 460 mm with a 50 mm-90° bend. Four bolts required per cabinet. Anchor bolts may be inside or outside cabinets.
15. An approved mastic or caulking compound shall be placed on the foundation prior to placing the cabinet to seal all openings between bottom of cabinet and foundation.
16. Controller units, plug-mounted equipment, shelf-mounted equipment and wall-mounted equipment shall be located to permit its safe and easy removal or replacement without removing any other piece of equipment.
17. Cabinet fan may be installed at an alternate location near the top of the cabinet when approved by the Engineer.
18. Where telephone interconnect is required, a minimum of 130 mm clear vertical space shall be provided inside the cabinet for the equipment.
19. Telephone interconnect conductors shall be enclosed in a 21C or larger conduit through the foundation. Type 4 metal conduit shall be used to separate telephone and power conductors in cabinets and pedestals.
20. For 332, 334 and 336 cabinet details, see "Traffic signal controller equipment specifications".

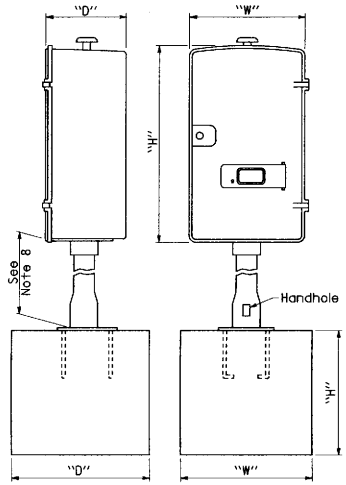

PCC FOUNDATION FOR TYPE G CABINET

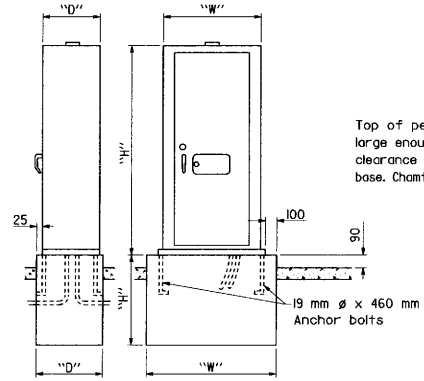

PCC FOUNDATION FOR TYPE P, R AND S CABINETS

Top of pedestal shall be large enough to provide 20 mm clearance all around cabinet base. Chamfer edge 10 mm x 10 mm.

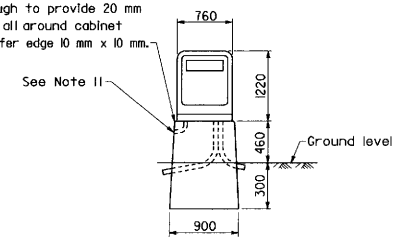

PCC PEDESTAL FOUNDATION FOR TYPE M OR MODEL 336 (TYPE 2 HOUSING) CABINET

CABINET				FOUNDATION			BOLT MOUNTING	
TYPE	H (mm)	W (mm)	D (mm)	H (mm)	W (mm)	D (mm)	D (mm)	W (mm)
G	810/970	510	350	900	600	600	BOLT PATTERN (AS REQ)	
M 336	1220	760	400	760	900	560	310	
P	1400	980	660	460	1270	760	470	1040
R	1900	980	660	460	1270	760	470	1040
S	1900	1500	660	460	1270	760	470	1560

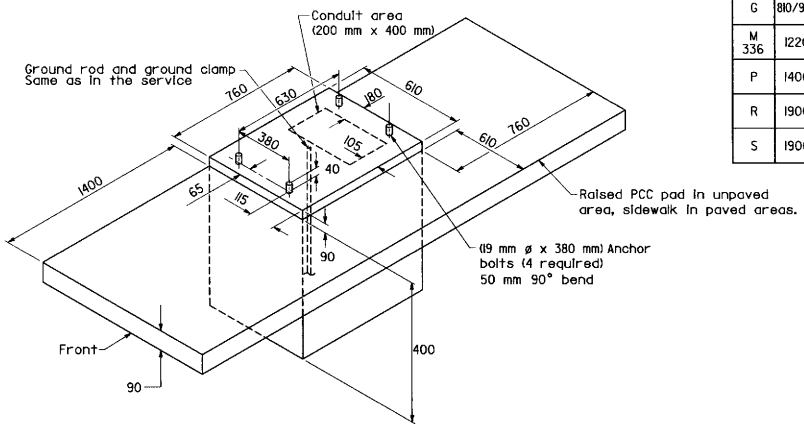

FOUNDATION DETAILS

For Model 332 and 334 cabinets (Type I housing)

STATE OF CALIFORNIA
DEPARTMENT OF TRANSPORTATION

SIGNAL, LIGHTING AND ELECTRICAL SYSTEMS CONTROLLER CABINET DETAILS

NO SCALE

ALL DIMENSIONS ARE IN MILLIMETERS UNLESS OTHERWISE SHOWN

ES-4B

STD. PLAN ES-4B

Return to Table of Contents

DIST	COUNTY	ROUTE	KILOMETER POST TOTAL PROJECT	SHEET NO.	TOTAL SHEETS

Les Kubel
REGISTERED ELECTRICAL ENGINEER

July 1, 1997
PLANS APPROVAL DATE

REGISTERED PROFESSIONAL ENGINEER Les Kubel No. E6503 Exp. 9-30-98 ELECTRICAL STATE OF CALIFORNIA

The State of California or its officers or agents shall not be responsible for the accuracy or completeness of electronic copies of this plan sheet.

California Metric

The Flash Transfer Relay shall intermate with a CINCH-JONES Socket S-408-SB or equal connected as follows:

Pin No	Circuit	Pin No	Circuit
1	Coil	5	Common, Circuit #1
2	Coil	6	Common, Circuit #2
3	NC Circuit #1	7	NO Circuit #1
4	NC Circuit #2	8	NO Circuit #2

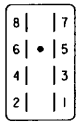

CONNECTOR SOCKET
FLASH TRANSFER RELAY

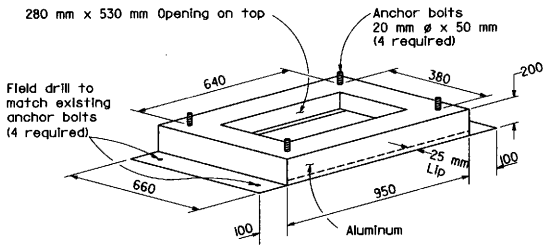

TYPE PR CABINET ADAPTER

1. Material: 4.78 mm thickness aluminum plate.
2. Mount adapter on Type P or Type R cabinet foundation.

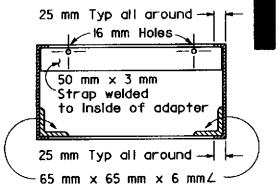

SECTION A-A

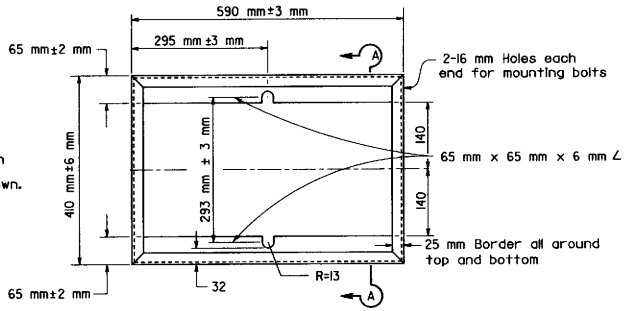

TOP VIEW

The FLASHER shall intermate with a CINCH-JONES Socket S-406-SB or equal connected as follows:

Pin No	Circuit	Pin No	Circuit
7	Load, Ckt #1	10	AC-
8	Load, Ckt #2	11	AC+
9	Chassis Ground	12	Not used

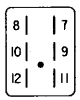

CONNECTOR SOCKET
SOLID STATE FLASHER UNIT

NOTE

Grounded conductors for beacons and sign to be spliced in pull box.

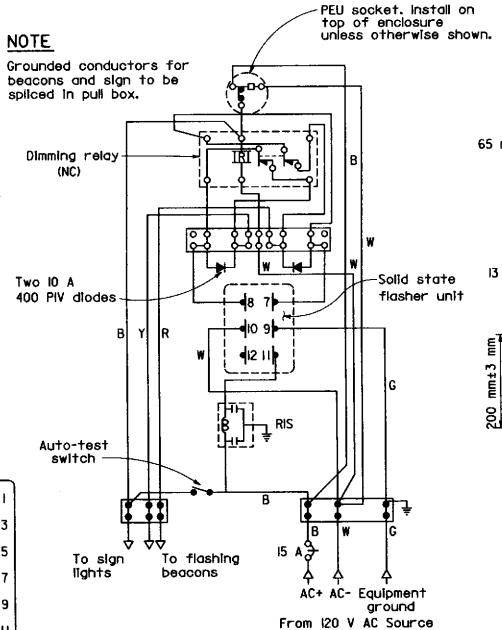

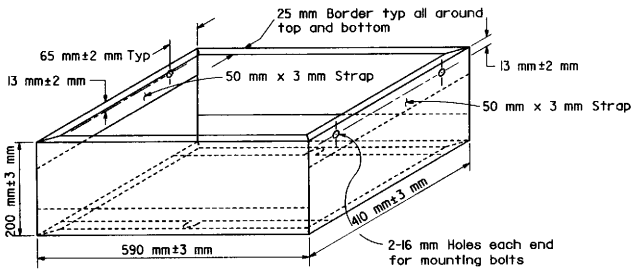

TYPE M CABINET ADAPTER

1. Mount adapter on Type M cabinet foundation.
2. Mounting bolts shall be 10 mm ø minimum size.
3. Aluminum (4.78 mm thickness).

The Solid-state Switching devices shall intermate with a CINCH-JONES Socket S-2412-SB or equal connected as follows:

Pin No	Circuit	Pin No	Circuit
1	AC + Lights	7	Green or Walk Output
2	Chassis Ground	8	Yellow Input
3	Red or Dont Walk Output	9	DC + (15 to 24 V)
4	Not used	10	Green or Walk Input
5	Yellow Output	11	AC-
4	Red or Dont Walk Input	12	Not used

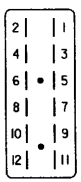

CONNECTOR SOCKET
SOLID STATE SWITCHING DEVICE

WIRING DIAGRAM
FLASHING BEACON CONTROL ASSEMBLY

STATE OF CALIFORNIA
DEPARTMENT OF TRANSPORTATION

SIGNAL, LIGHTING AND ELECTRICAL SYSTEMS CONTROLLER CABINET DETAILS

NO SCALE

ALL DIMENSIONS ARE IN MILLIMETERS UNLESS OTHERWISE SHOWN

ES-4C

STD. PLAN ES-4C

Return to Table of Contents

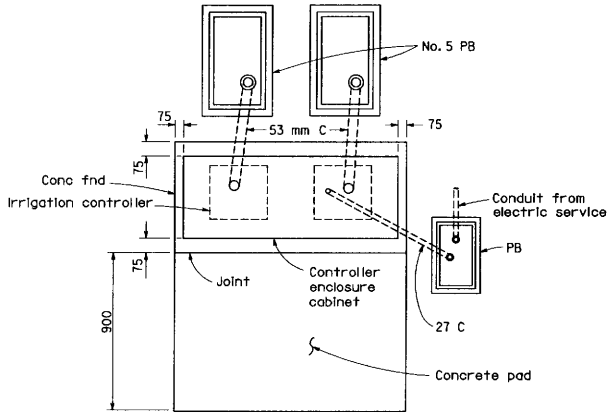

PLAN

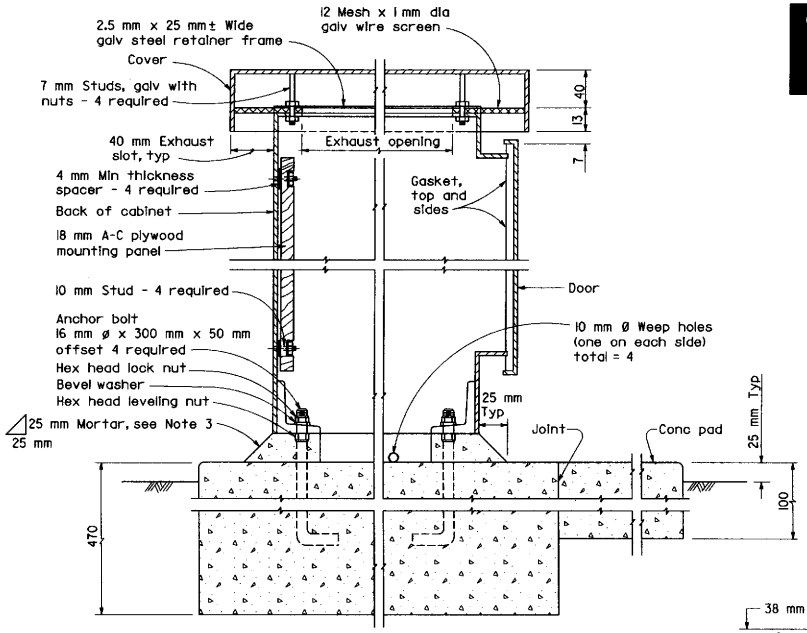

CABINET SECTION

NOTES

1. All dimensions are nominal.
2. Irrigation Controller Enclosure Cabinet dimensions: 1500 mm (H) x 300 mm (D) x 500 mm (W) for single controller enclosure, 900 mm W for double enclosure.
3. Mortar shall be 1-part cement, 2-parts plaster sand.
4. Rain sensor unit and/or remote control actuator connectors. To be provided only when specified.
5. See project plans for location and number of irrigation controllers for each cabinet.
6. Switch and GFI outlet boxes shall be cast metal with threaded hubs and cast metal covers with gaskets. Snap switches shall be 20-A, 120/277-V specifications grade switch.

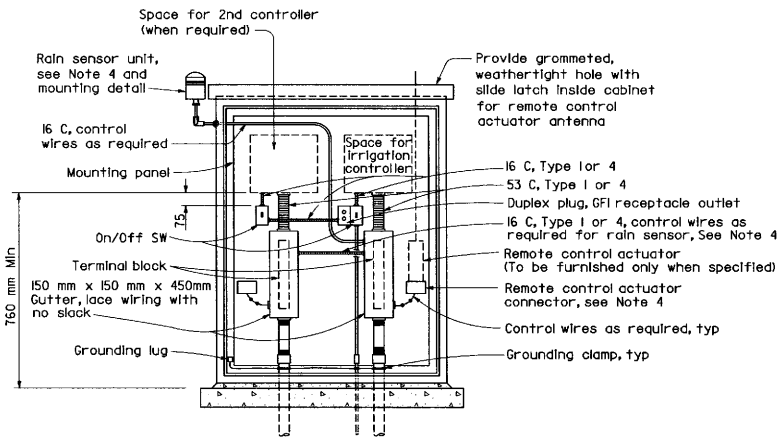

ELEVATION

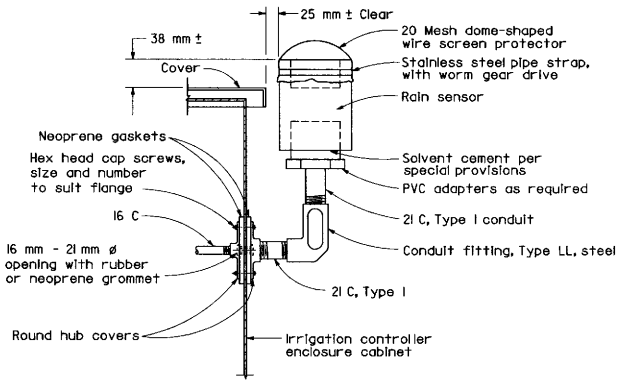

RAIN SENSOR UNIT MOUNTING DETAIL

DIST	COUNTY	ROUTE	KILOMETER POST TOTAL PROJECT	SHEET NO.	TOTAL SHEETS

Les Kubel
REGISTERED ELECTRICAL ENGINEER

July 1, 1997
PLANS APPROVAL DATE

REGISTERED PROFESSIONAL ENGINEER Les Kubel No. E6503 Exp. 9-30-98 ELECTRICAL STATE OF CALIFORNIA

The State of California or its officers or agents shall not be responsible for the accuracy or completeness of electronic copies of this plan sheet.

STATE OF CALIFORNIA
DEPARTMENT OF TRANSPORTATION

IRRIGATION CONTROLLER ENCLOSURE CABINET

NO SCALE

ALL DIMENSIONS ARE IN MILLIMETERS UNLESS OTHERWISE SHOWN

ES-4D

STD. PLAN ES-4D

Return to Table of Contents

DIST	COUNTY	ROUTE	KILOMETER POST TOTAL PROJECT	SHEET NO.	TOTAL SHEETS

REGISTERED ELECTRICAL ENGINEER

July 1, 1997
PLANS APPROVAL DATE

Les Kubel
No. E6503
Exp. 9-30-98
ELECTRICAL
REGISTERED PROFESSIONAL ENGINEER
STATE OF CALIFORNIA

The State of California or its officers or agents shall not be responsible for the accuracy or completeness of electronic copies of this plan sheet.

Metric

LOOP INSTALLATION PROCEDURE

1. Install termination pull box and curb or shoulder termination detail (see Standard Plan ES-5E).
2. Loops shall be centered in lanes.
3. Saw slots in pavement for loop conductors as shown in details.
4. Distance between side of loop and a lead-in saw cut from adjacent detectors shall be 600 mm minimum. Distance between lead-in saw cuts shall be 150 mm minimum.
5. Bottom of saw slot shall be smooth with no sharp edges.
6. Slots shall be washed until clean, blown out and thoroughly dried before installing loop conductors.
7. Adjacent loops on the same sensor unit channel shall be wound in opposite directions.
8. Identify and tag loop circuit pairs in the termination pull box. Indentify and tag with loop number, start (S) and finish (F) of conductor. Identify and tag lead-in cable with sensor number and phase.
9. Install loop conductor in slot using a 5 mm to 6 mm thick wood paddle.
10. No more than 2 twisted pairs shall be installed in one sawed slot.
11. Allow additional length of conductor for the run to termination pull box plus 1.5 m of slack in pull box.
12. The additional length of each conductor for each loop shall be twisted together into a pair (6 turns per meter minimum) before being placed in the slot and conduit to termination pull box.
13. Test each loop circuit for continuity, circuit resistance and insulation resistance at the pull box before filling slots.
14. Fill slots as shown in details.
15. Splice loop conductors to lead-in cable. All splices shall be soldered using rosin-core solder.
16. End of lead-in cable and Type 2 loop wire shall be waterproofed prior to installing in conduit to prevent moisture from entering the cable.
17. Lead-in cable shall not be spliced between the termination pull box and the controller cabinet terminals.
18. Test each loop circuit for continuity, circuit resistance and insulation resistance at the controller cabinet location.
19. Where loop conductors are not to be spliced to a lead-in cable, the ends of the conductors shall be taped and waterproofed with electrical insulating coating.

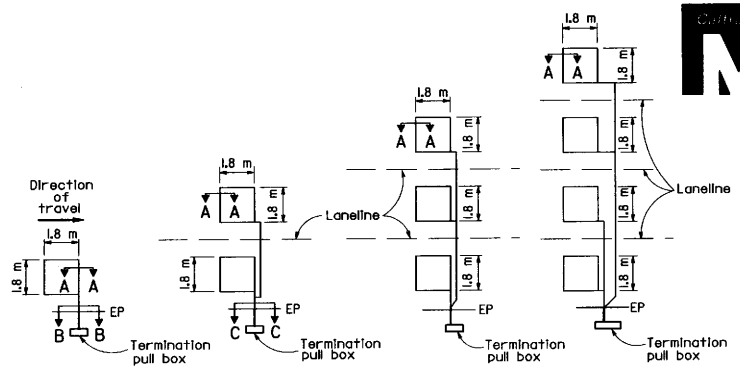

TYPE 1A INSTALLATION | TYPE 2A INSTALLATION | TYPE 3A INSTALLATION | TYPE 4A INSTALLATION

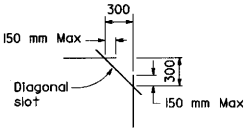

PLAN VIEW OF DIAGONAL SLOT AT CORNERS

SAWCUT DETAILS

Type A loop detector configurations illustrated

1. 1A thru 4A = 1 Type A loop configuration in each lane.
2. 1B thru 4B = 1 Type B loop configuration in each lane.
3. 1C = 1 Type C loop configuration entering lanes as required.
4. 1D thru 4D = 1 Type D loop configuration in each lane.
5. 1Q thru 4Q = 1 Type Q loop configuration in each lane.
6. 1E thru 4E = 1 Type E loop configuration in each lane. (Use Type B, C, D or Q loop detector configurations only when specified or shown on plans)

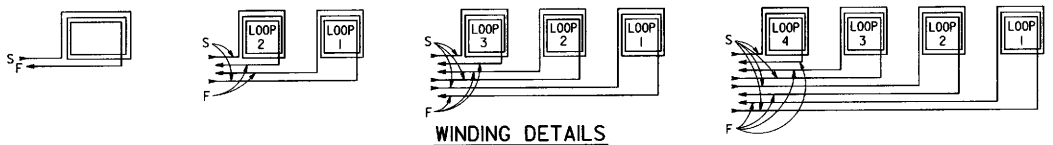

WINDING DETAILS

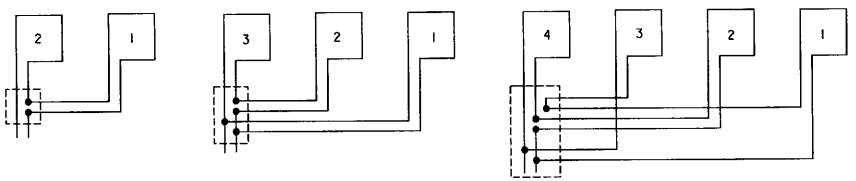

TYPICAL LOOP CONNECTIONS

(Dashed lines represent the pull box)
Number 1 loop is closest to the crosswalk.

STATE OF CALIFORNIA
DEPARTMENT OF TRANSPORTATION

SIGNAL, LIGHTING AND ELECTRICAL SYSTEMS DETECTORS

NO SCALE

ALL DIMENSIONS ARE IN MILLIMETERS UNLESS OTHERWISE SHOWN

ES-5A

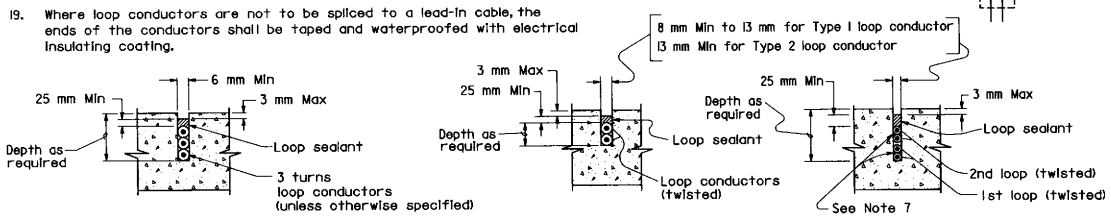

SECTION A-A | SECTION B-B | SECTION C-C

SLOT DETAILS-TYPE 1 AND TYPE 2 LOOP CONDUCTOR

STD. PLAN ES-5A

Return to Table of Contents

DIST	COUNTY	ROUTE	KILOMETER POST TOTAL PROJECT	SHEET NO.	TOTAL SHEETS

Les Kubel
REGISTERED ELECTRICAL ENGINEER

July 1, 1997
PLANS APPROVAL DATE

REGISTERED PROFESSIONAL ENGINEER — Les Kubel — No. E6503 — Exp. 9-30-98 — ELECTRICAL — STATE OF CALIFORNIA

The State of California or its officers or agents shall not be responsible for the accuracy or completeness of electronic copies of this plan sheet.

Caltrans Metric

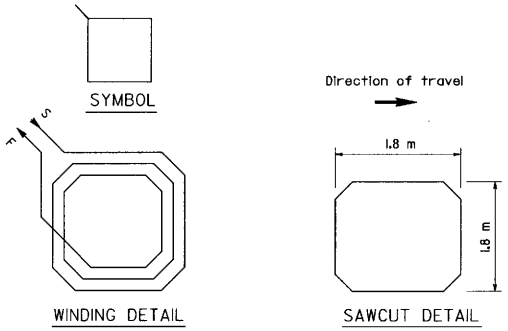

TYPE A LOOP DETECTOR CONFIGURATION

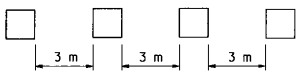

TYPICAL TYPE A INSTALLATION

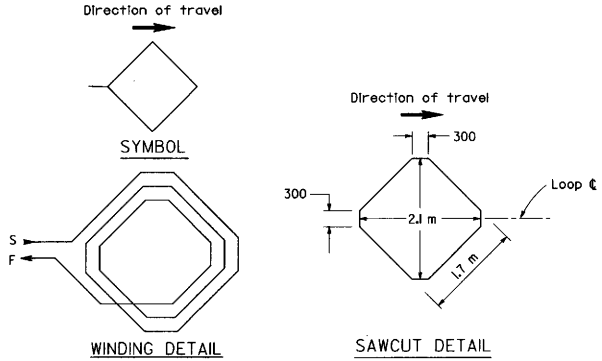

TYPE B LOOP DETECTOR CONFIGURATION

(Use only when specified or shown on the plans.)

NOTE

Install loop with loop centerline parallel to curb or laneline.

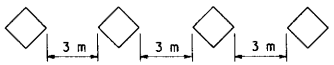

TYPICAL TYPE B INSTALLATION

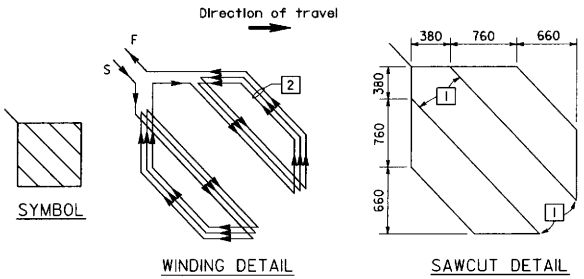

TYPE D LOOP DETECTOR CONFIGURATION

(Use only when specified or shown on the plans.)

1 Round corners of acute angle sawcuts to prevent damage to conductors.

2 Install 3 turns when only one Type D loop is on a sensor unit channel. Install 5 turns when one Type D loop is connected in series with 3 additional 1.8 m x 1.8 m loops on a sensor unit channel.

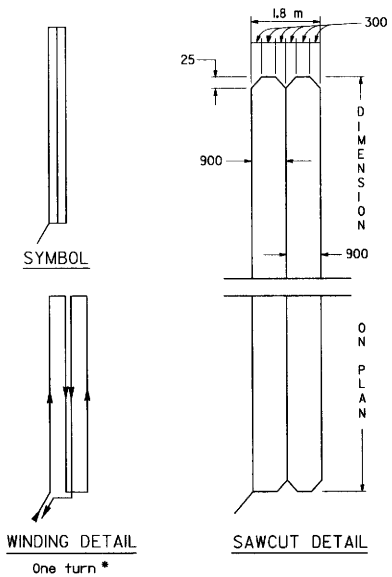

TYPE C LOOP DETECTOR CONFIGURATION

(Use only when specified or shown on the plans.)

* Install two turns unless otherwise specified.

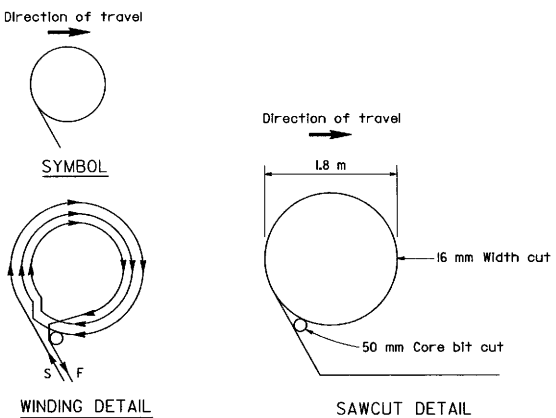

TYPE E LOOP DETECTOR CONFIGURATION

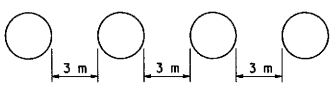

TYPICAL TYPE E INSTALLATION

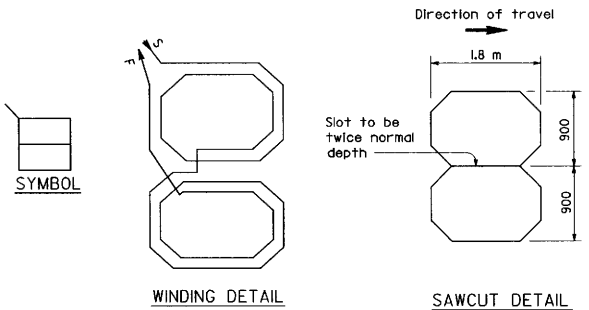

TYPE Q LOOP DETECTOR CONFIGURATION

(Use only when specified or shown on the plans.)

STATE OF CALIFORNIA
DEPARTMENT OF TRANSPORTATION

SIGNAL, LIGHTING AND ELECTRICAL SYSTEMS DETECTORS

NO SCALE

ALL DIMENSIONS ARE IN MILLIMETERS UNLESS OTHERWISE SHOWN

ES-5B

STD. PLAN ES-5B

Return to Table of Contents

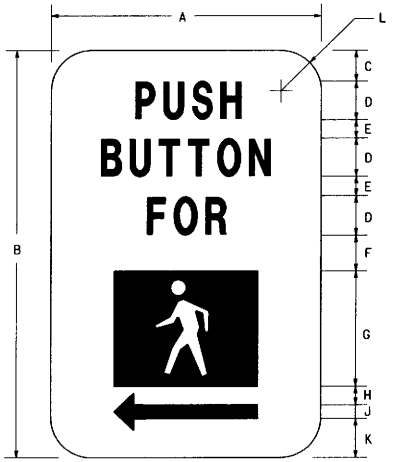

ALTERNATE SYMBOL AND ARROW DIRECTIONS:
LEFT, RIGHT OR BOTH

SIGN DIMENSIONS (MILLIMETERS)											
	A	B	C	D	E	F	G	H	J	K	L
Min	130	190	15	20	10	12	50	10	6	17	20

NOTE

Color of legend and arrow are black.
Color of background and symbol are white.

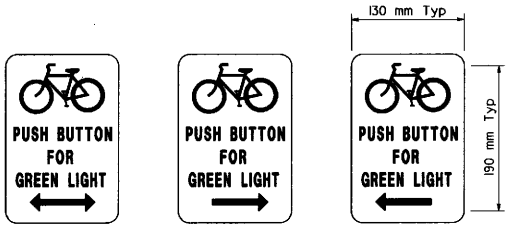

FOR BICYCLE LANES
(Use only when specified)
Black legend on white background.

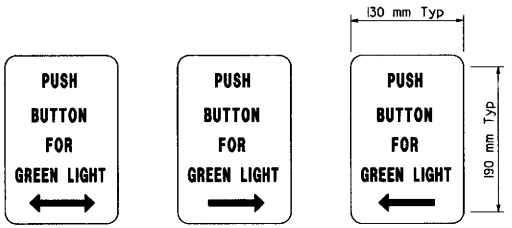

FOR 3-LIGHT SIGNALS
(Use only when specified)
Black legend on white background.

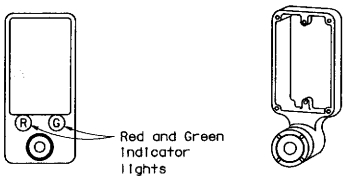

TYPE A
(Use only when specified)

TYPE B

TYPE C
(Use only when specified)

PEDESTRIAN PUSH BUTTONS

NOTE

1. Shape of back of casting to fit curvature of post.
2. Provide cover fitting for top of post, when PPB is mounted on pedestrian push button post.
3. Install push button on crosswalk side of standard.

PEDESTRIAN PUSH BUTTON SIGNS

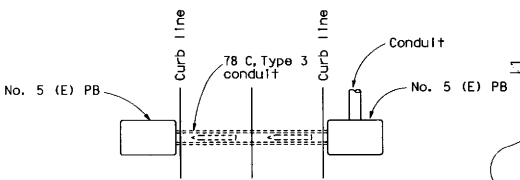

PLAN

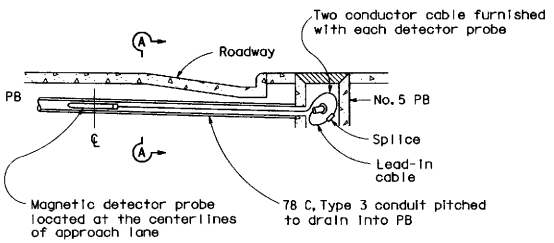

ELEVATION

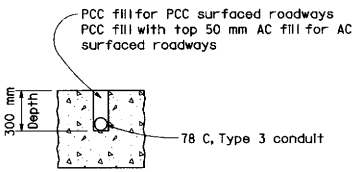

SECTION A-A

MAGNETIC VEHICLE DETECTOR
INSTALLATION DETAILS

STATE OF CALIFORNIA
DEPARTMENT OF TRANSPORTATION

SIGNAL, LIGHTING AND ELECTRICAL SYSTEMS DETECTORS

NO SCALE

ALL DIMENSIONS ARE IN
MILLIMETERS UNLESS OTHERWISE SHOWN

ES-5C

DIST	COUNTY	ROUTE	KILOMETER POST TOTAL PROJECT	SHEET NO.	TOTAL SHEETS

REGISTERED ELECTRICAL ENGINEER

July 1, 1997
PLANS APPROVAL DATE

The State of California or its officers or agents shall not be responsible for the accuracy or completeness of electronic copies of this plan sheet.

REGISTERED PROFESSIONAL ENGINEER
Les Kubel
No. E6503
Exp. 9-30-98
ELECTRICAL
STATE OF CALIFORNIA

STD. PLAN ES-5C

Return to Table of Contents

DIST	COUNTY	ROUTE	KILOMETER POST TOTAL PROJECT	SHEET NO.	TOTAL SHEETS

REGISTERED ELECTRICAL ENGINEER

July 1, 1997
PLANS APPROVAL DATE

Les Kubel No. E6503 Exp. 9-30-98 ELECTRICAL — REGISTERED PROFESSIONAL ENGINEER — STATE OF CALIFORNIA

The State of California or its officers or agents shall not be responsible for the accuracy or completeness of electronic copies of this plan sheet.

California Metric

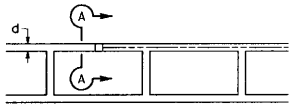

INSTALLATION DETAIL
IN BRIDGE DECK

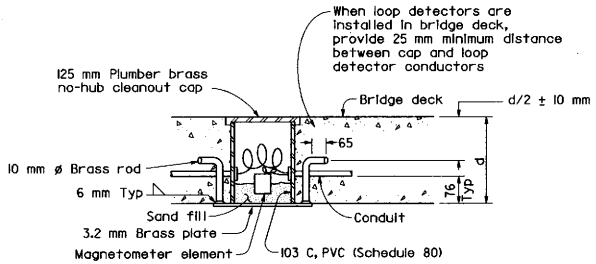

SECTION A-A

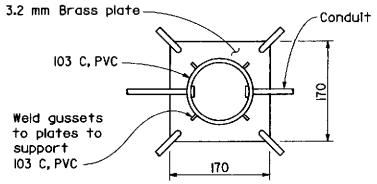

DETECTOR INSTALLATION IN
BRIDGE DECK

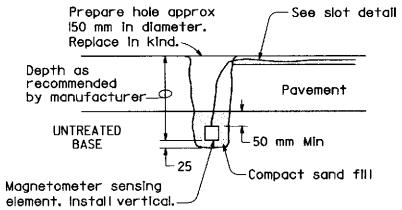

LIGHT DUTY ROADWAY
(With untreated base)

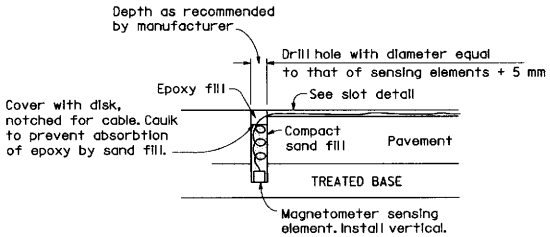

HEAVY DUTY ROADWAY
(With treated base)

MAGNETOMETER SENSING ELEMENT
INSTALLATION DETAILS

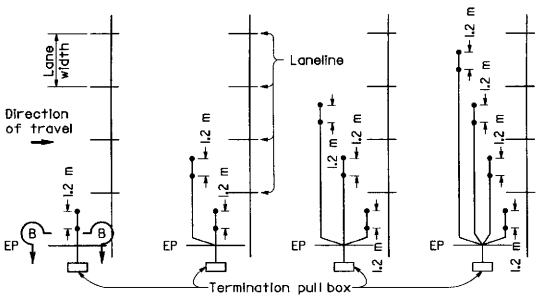

TYPE 1 INSTALLATION | TYPE 2 INSTALLATION | TYPE 3 INSTALLATION | TYPE 4 INSTALLATION

LAYOUTS AND DIMENSIONS

MAGNETOMETER DETECTOR INSTALLATION PROCEDURE

1. Prepare holes for sensing elements and saw slots in pavement for magnetometer cables as shown in details. Slots shall be washed until cleaned. Blow out and dry thoroughly with compressed air.
2. Install termination pull box. See termination details.
3. Install heads in holes and install cables in slots using 5 mm to 6 mm wood paddle and run to adjacent pull box allowing 1.5 m of slack at the pull box.
4. Identify cables by lane or sensor unit designation.
5. Splice magnetometer cables to lead-in cables. All splices shall be soldered using rosin core solder.
6. Test each sensing element circuit at controller or count station cabinet before filling holes and slots. Excitation circuits shall have a resistance of 50 Ω* per head and detection circuits shall have a resistance of 300 Ω* per head. Measurements shall be made with a low range ohm-meter.
7. Fill slots and sensing element holes as shown in details.
8. Lead-in cable shall not be spliced between the termination pull box and the controller cabinet terminals.
9. See Standard Plan ES-5E for curb termination details.

*Or other resistance per manufacturers' specifications

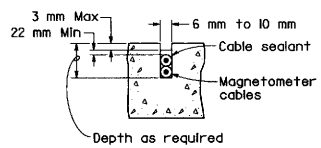

SECTION B-B

SLOT DETAIL

STATE OF CALIFORNIA
DEPARTMENT OF TRANSPORTATION

SIGNAL, LIGHTING AND ELECTRICAL SYSTEMS DETECTORS

NO SCALE

ALL DIMENSIONS ARE IN MILLIMETERS UNLESS OTHERWISE SHOWN

ES-5D

STD. PLAN ES-5D

Return to Table of Contents

DIST	COUNTY	ROUTE	KILOMETER POST TOTAL PROJECT	SHEET NO.	TOTAL SHEETS

Les Kubel
REGISTERED ELECTRICAL ENGINEER

July 1, 1997
PLANS APPROVAL DATE

REGISTERED PROFESSIONAL ENGINEER — Les Kubel — E6503 — EXP. 9-30-98 — ELECTRICAL — STATE OF CALIFORNIA

The State of California or its officers or agents shall not be responsible for the accuracy or completeness of electronic copies of this plan sheet.

California Metric

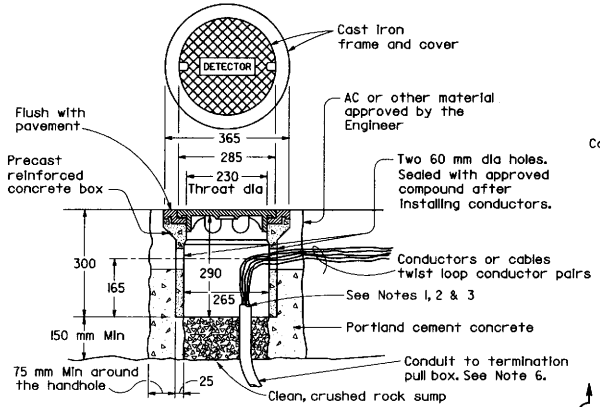

TYPE A DETECTOR HANDHOLE DETAILS

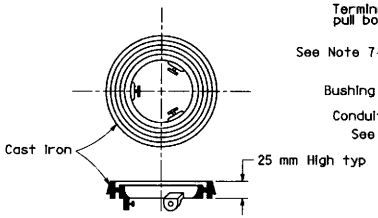

NOTE

Use for Type A detector handhole on pavement resurfacing only.

LOCKING GRADE RING

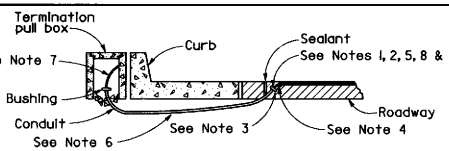

CURB TERMINATION DETAILS TYPE A

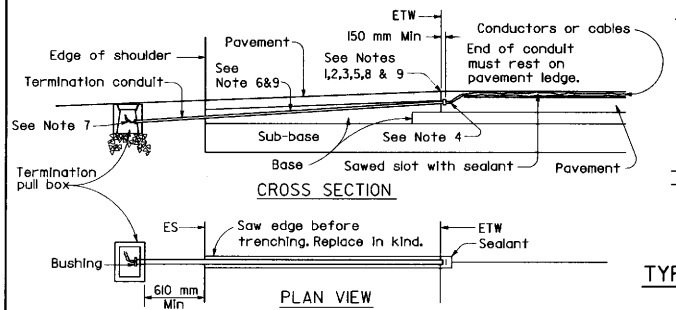

SHOULDER TERMINATION DETAILS

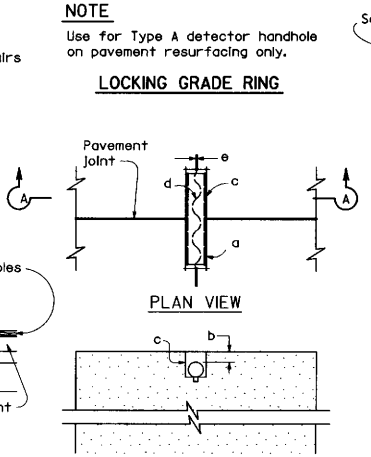

TYPICAL LOOP LEAD-IN DETAILS AT PAVEMENT JOINT

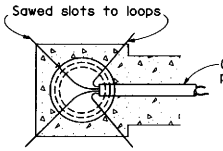

a. 21 C, Type 3 conduit 150 mm long minimum, plug both ends with caulking compound to keep out sealant.

b. 13 mm Minimum between top of conduit and pavement surface.

c. Saw cut shall not exceed 25 mm in width and 3 mm longer than conduit to be installed.

d. Conductors with 13 mm minimum slack inside conduit.

e. Inductive Loop Detector saw slot.

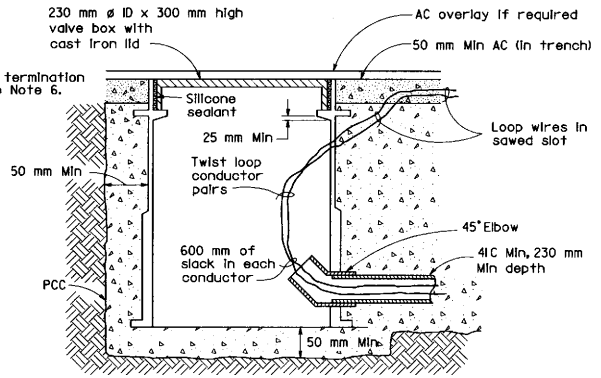

TYPE B DETECTOR HANDHOLE DETAILS

INSTALLATION REQUIREMENTS
TYPE B DETECTORS HANDHOLE

1. Outline of trench shall be saw cut to a minimum depth of 80 mm except where asphalt concrete overlay is to be placed.
2. The valve box shall be fabricated of calcium carbonate and polyester resins with fiberglass reinforcing and designed for heavy traffic loads.
3. Cast iron lid shall be marked "Detector" and shall be secured in placed by applying waterproof silicone sealant. Valve box shall be centered on lane line, unless otherwise shown on the plans.
4. Entire length of trench, from valve box to adjacent pull box, shall be backfilled with portland cement concrete except the top 50 mm in asphalt concrete surfaced roadways shall be backfilled with asphalt concrete.

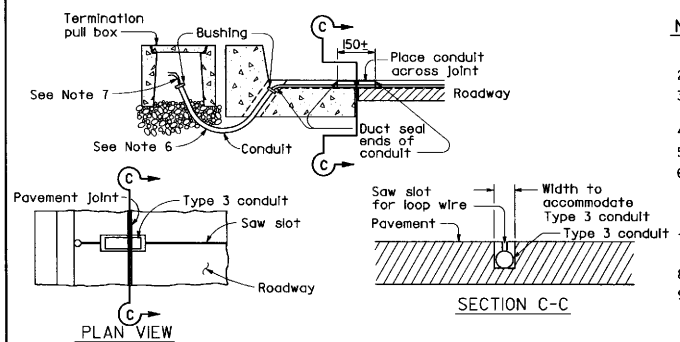

CURB TERMINATION DETAILS TYPE B

NOTES (This sheet only)

1. Bushing shall be used at roadway end of conduit.
2. Tape wire 75 mm each side of bushing.
3. Install duct seal compound to each end of termination conduit before installing sealant.
4. Round all sharp edges where wire has to pass.
5. End of conduit shall be 50 mm below roadway surface.
6. Conduit size / Loop Conductors / Magnetometer Cables
   - 27 C Minimum / Up to 2 pairs / Up to 3 cables
   - 41 C Minimum / 3 to 4 pairs / 4 to 8 cables
   - 53 C Minimum / 5 or more pairs / 9 or more cables
7. Splice detector conductors or cables to lead-in cable run to controller cabinet.
8. Location of detector handhole when shown on plans.
9. When the shoulder and traveled way are paved with the same material and there is no joint between them, the conduit shall extend only 600 mm into the shoulder pavement.

STATE OF CALIFORNIA
DEPARTMENT OF TRANSPORTATION

SIGNAL, LIGHTING AND ELECTRICAL SYSTEMS DETECTORS

NO SCALE

ALL DIMENSIONS ARE IN MILLIMETERS UNLESS OTHERWISE SHOWN

ES-5E

Return to Table of Contents

DIST	COUNTY	ROUTE	KILOMETER POST TOTAL PROJECT	SHEET NO.	TOTAL SHEETS

Metric

REGISTERED CIVIL ENGINEER

July 1, 1997
PLANS APPROVAL DATE

Jeffrey B. Woody
No. C41260
Exp. 3-31-99
CIVIL
STATE OF CALIFORNIA
REGISTERED PROFESSIONAL ENGINEER

The State of California or its officers or agents shall not be responsible for the accuracy or completeness of electronic copies of this plan sheet.

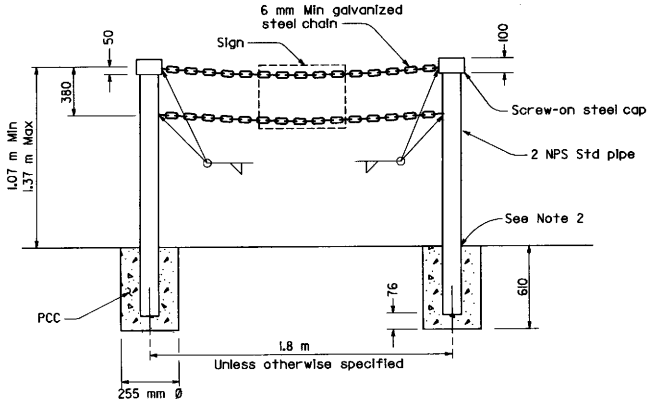

TYPE II

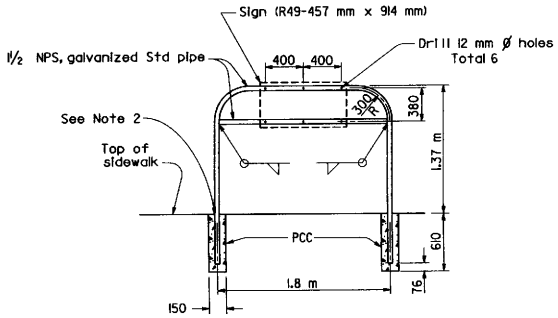

TYPE I

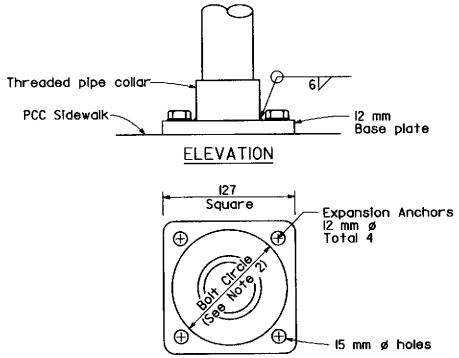

POST ANCHORAGE DETAIL

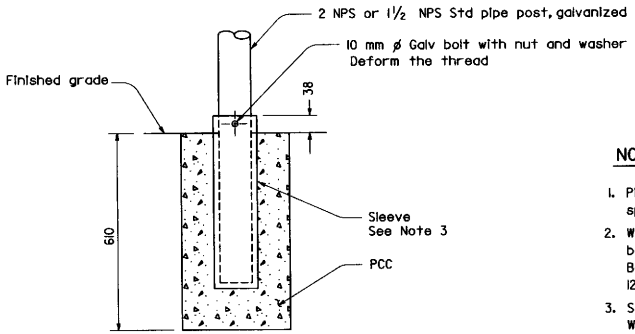

SLEEVE POST DETAIL

Use only when specified or shown on plans

NOTES

1. Pipe post to be set 460 mm back from face of curb unless otherwise specified.
2. Where barricade posts are installed in concrete sidewalk, the post may be anchored to the sidewalk as shown in the "Post Anchorage Detail". Bolt circle diameter shall be 102 mm minimum for Type I barricade and 127 mm minimum for Type II barricade.
3. Steel sleeve to be constructed with a diameter 2.5 mm larger than post. Wall thickness of sleeve to be same as post or larger.
4. Contractor may submit alternative details for approval by the Engineer.
5. For minimum pipe diameters and wall thickness refer to ASTM A6M.

STATE OF CALIFORNIA
DEPARTMENT OF TRANSPORTATION

SIGNAL, LIGHTING AND ELECTRICAL SYSTEMS PEDESTRIAN BARRICADES

NO SCALE

ALL DIMENSIONS ARE IN MILLIMETERS UNLESS OTHERWISE SHOWN

ES-5F

STD. PLAN ES-5F

Return to Table of Contents

DIST	COUNTY	ROUTE	KILOMETER POST TOTAL PROJECT	SHEET NO.	TOTAL SHEETS

REGISTERED CIVIL ENGINEER

July 1, 1997
PLANS APPROVAL DATE

REGISTERED PROFESSIONAL ENGINEER Jeffrey B. Woody No. C41260 Exp. 3-31-99 CIVIL STATE OF CALIFORNIA

The State of California or its officers or agents shall not be responsible for the accuracy or completeness of electronic copies of this plan sheet.

California Metric

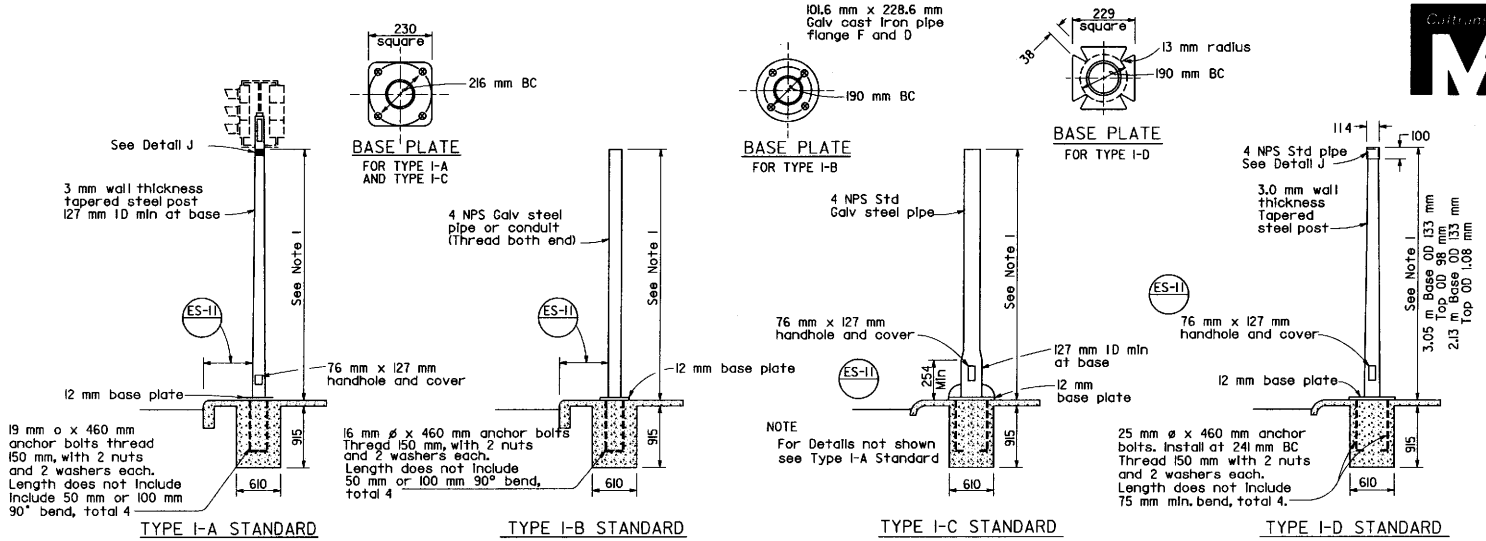

NOTES

1. Standards shall be 3.05 m± 50 mm for vehicle signals and 2.13 m± 50 mm for pedestrian signals unless otherwise noted on plans.
2. Top of standards shall be 114 mm OD.
3. Conduits shall extend 50 mm maximum above finished surface of foundation and for Types I-A, I-C and I-D shall be sloped toward handhole.
4. Anchor bolts shall be bonded to conduit or grounding conductor.
5. Conduit between standard and adjacent pull box shall be size 53 minimum.
6. Paint numbers on roadway side facing traffic when electrolier or post is left of direction of traffic.

TYPE I SIGNAL STANDARDS

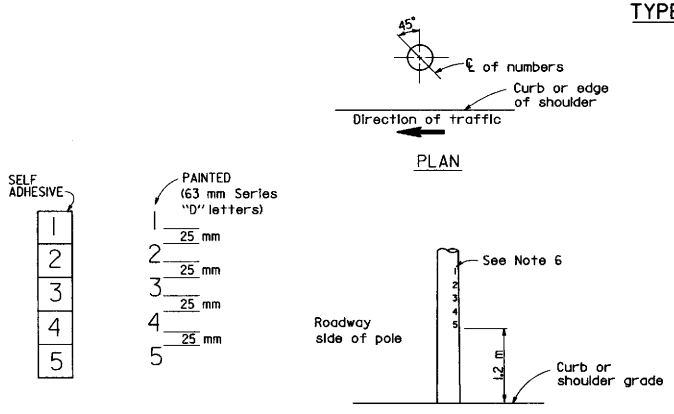

LETTER DETAIL

TYPICAL NUMBER FORMAT

LOCATION OF EQUIPMENT NUMBERS ON STANDARDS AND POSTS

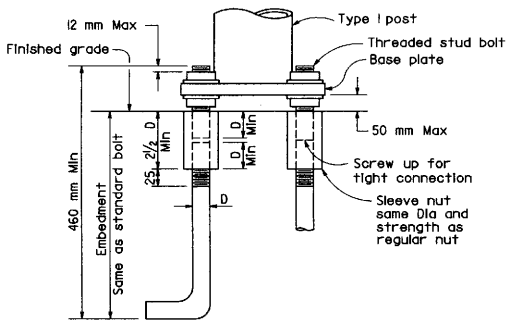

ANCHOR BOLTS WITH SLEEVE NUTS

Sleeve nuts to be used only when shown or specified on Project Plans

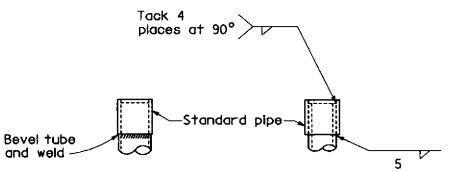

DETAIL J

Tube may be inserted into pipe or butted as required

STATE OF CALIFORNIA
DEPARTMENT OF TRANSPORTATION

SIGNAL AND LIGHTING STANDARDS TYPE 1 STANDARDS AND EQUIPMENT NUMBERING

NO SCALE

ALL DIMENSIONS ARE IN MILLIMETERS UNLESS OTHERWISE SHOWN

ES-6A

STD. PLAN ES-6A

Return to Table of Contents

DIST	COUNTY	ROUTE	KILOMETER POST TOTAL PROJECT	SHEET NO.	TOTAL SHEETS

Metric

REGISTERED CIVIL ENGINEER

July 1, 1997
PLANS APPROVAL DATE

REGISTERED PROFESSIONAL ENGINEER Jeffrey B. Woody No. C41260 Exp. 3-31-99 CIVIL STATE OF CALIFORNIA

The State of California or its officers or agents shall not be responsible for the accuracy or completeness of electronic copies of this plan sheet.

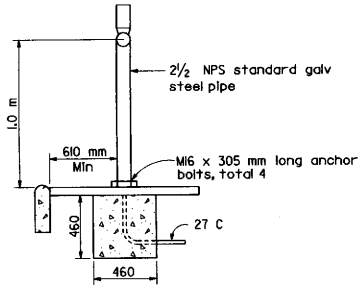

ELEVATION

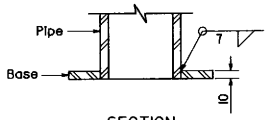

SECTION

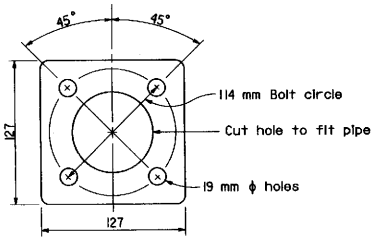

BASE PLATE

NOTE

Conduit shall protrude 50 mm maximum above finished surface foundation. Anchor bolt shall be bonded to conduit or grounding conductor.

PEDESTRIAN PUSH BUTTON POST

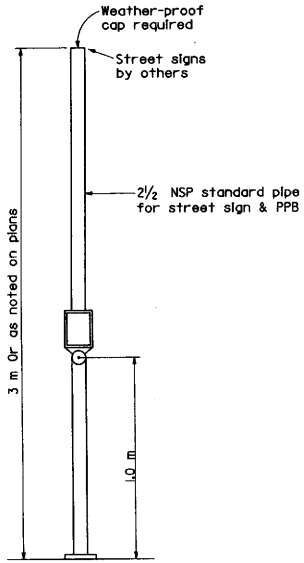

Foundation and anchor bolt details same as PPB post

COMBINED STREET SIGN
PEDESTRIAN PUSH BUTTON POST

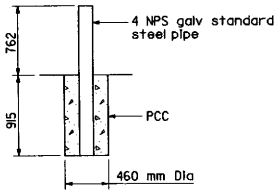

GUARD POST

NOTE

Pipe dimensions are nominal. See ASTM A6M.

STATE OF CALIFORNIA
DEPARTMENT OF TRANSPORTATION

SIGNAL STANDARDS PUSH BUTTON POSTS

NO SCALE

ALL DIMENSIONS ARE IN MILLIMETERS UNLESS OTHERWISE SHOWN

ES-6AA

STD. PLAN ES-6AA

Return to Table of Contents

DIST	COUNTY	ROUTE	KILOMETER POST TOTAL PROJECT	SHEET NO.	TOTAL SHEETS

Caltrans Metric

REGISTERED CIVIL ENGINEER

July 1, 1997
PLANS APPROVAL DATE

REGISTERED PROFESSIONAL ENGINEER Jeffrey B. Woody No. C41260 Exp. 3-31-99 CIVIL STATE OF CALIFORNIA

The State of California or its officers or agents shall not be responsible for the accuracy or completeness of electronic copies of this plan sheet.

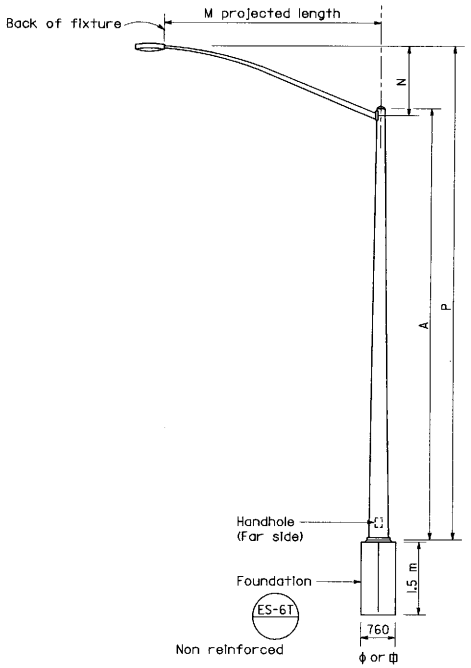

ELEVATION

TYPE 15
TYPE 22

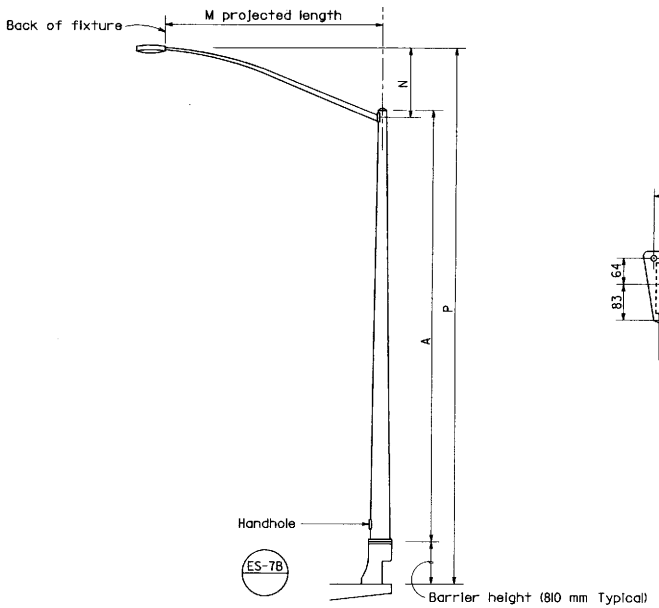

ELEVATION

TYPE 15 BARRIER RAIL MOUNTED

TYPE 21 BARRIER RAIL MOUNTED

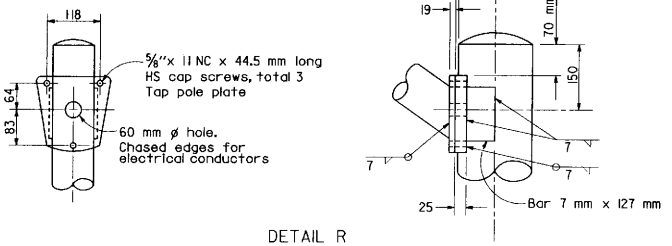

DETAIL R

LUMINAIRE ARM CONNECTION

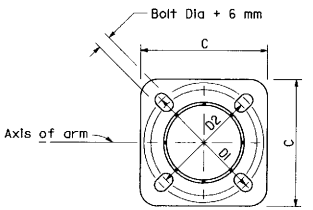

BASE PLATE

ES-6S — Alternative Base Plate Details

POLE TYPE	POLE DATA				BASE PLATE DATA						LUMINAIRE ARM
	A Height	MIN OD Base	MIN OD Top	Wall Thickness	C	D1	D2	Thickness	Anchor Bolts Size	Anchor Bolts Bolt Circle	
	m	mm	mm	mm	mm	mm	mm	mm	mm	mm	m
15	9.1	203	98	3.04	305	292	279	25	25 ø x 920 x 102*	280	1.8-4.6 [3.7]
21	10.7	219	98	3.04	305	305	292	25	32 ø see Note 2	305	1.8-4.6 [3.7]
22	10.7	219	98	3.04	305	292	292	25	25 ø x 920 x 102	292	1.8-4.6 [3.7]

LUMINAIRE ARM DATA						
M Projected Length	N Rise	Min OD At Pole	Nominal Thickness	P Mounting Height Type 15	P Mounting Height Type 22	P Mounting Height Type 21
m	mm	mm	mm	m	m	m
1.8	610±	83	3.04	9.6 ±	11.1 ±	11.9 ±
2.4	760±	89	3.04	9.8 ±	11.3 ±	12.1 ±
3.1	990±	98	3.04	10.0 ±	11.5 ±	12.3 ±
3.7	1290±	98	3.04	10.3 ±	11.8 ±	12.6 ±
4.6	1450±	108	3.04	10.4 ±	12.0 ±	12.8 ±

NOTES

1. ☐ Indicates arm length to be used unless otherwise noted on the plans.
2. For anchorage details see ES-7B.
3. See ES-7B when Type 15 is to be mounted on bridge railing.
4. For Type 15-SB, use Type 15 standard with Type 30 base plate details, see Standard Plan ES-6E.
5. For additional notes see Standard Plan ES-6S.
6. For Type 15-SBI, see Standard Plan ES-6U.

* For barrier rail mount, see Note 2.

STATE OF CALIFORNIA
DEPARTMENT OF TRANSPORTATION

LIGHTING STANDARDS TYPES 15, 21 AND 22

NO SCALE

ALL DIMENSIONS ARE IN MILLIMETERS UNLESS OTHERWISE SHOWN

ES-6B

STD. PLAN ES-6B

Return to Table of Contents

DIST	COUNTY	ROUTE	KILOMETER POST TOTAL PROJECT	SHEET NO.	TOTAL SHEETS

REGISTERED CIVIL ENGINEER

July 1, 1997
PLANS APPROVAL DATE

Jeffrey B. Woody
No. C41260
Exp. 3-31-99
CIVIL
STATE OF CALIFORNIA
REGISTERED PROFESSIONAL ENGINEER

The State of California or its officers or agents shall not be responsible for the accuracy or completeness of electronic copies of this plan sheet.

Caltrans Metric

TABLE						
Pole Height "H"	"D" = CIDH Pile Dia	"L" Linear	Pile Reinf Number	B.C.= Bolt Circle	Anchor Bolts total	"d" = Bolt Dia
(m)	(mm)	(m)		(mm)		(mm)
24.4	1070	3.0	10	635	4	51
30.5	1070	3.3	13	635	6	51
36.6	1220	3.6	20	812	6	51
48.8	1370	4.5	25	914	6	64

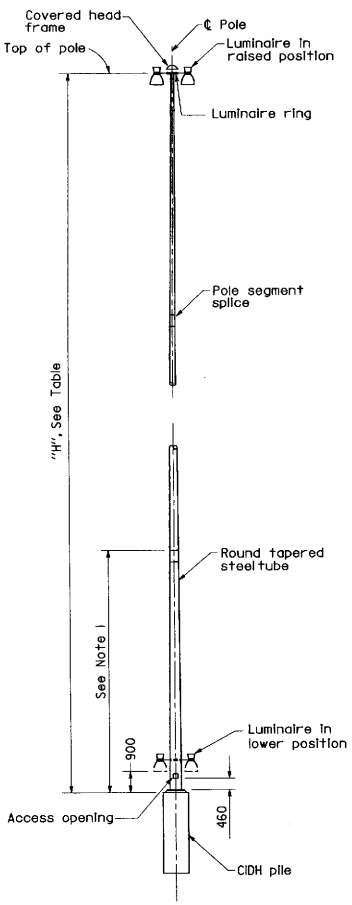

POLE DETAILS

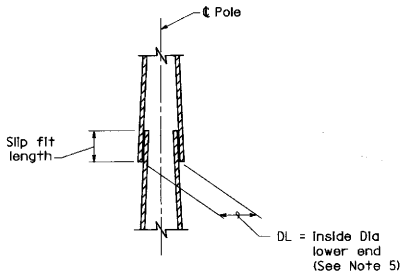

POLE SEGMENT SPLICE DETAIL

See Note 5

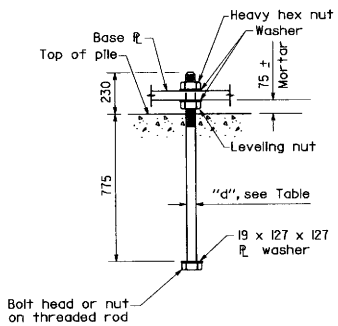

ANCHOR BOLT DETAIL

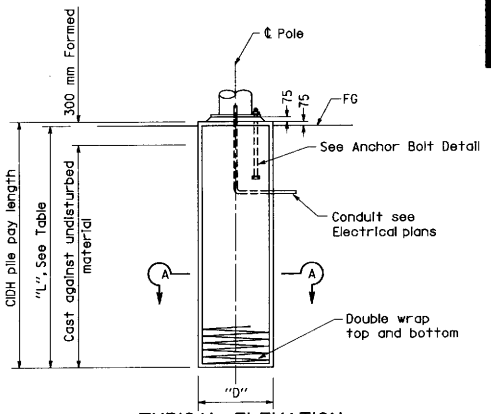

TYPICAL ELEVATION

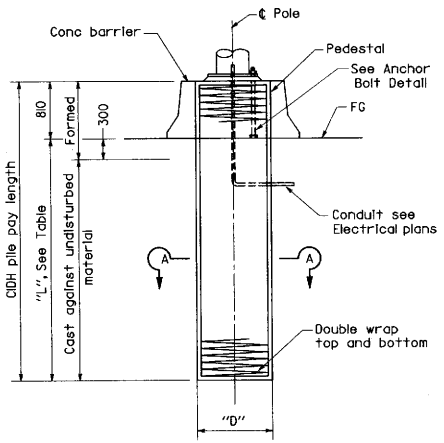

MEDIAN LOCATION

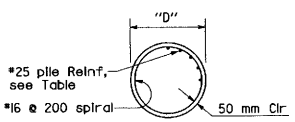

SECTION A-A

CIDH PILE DETAILS

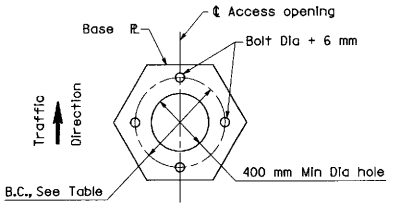

4 BOLTS

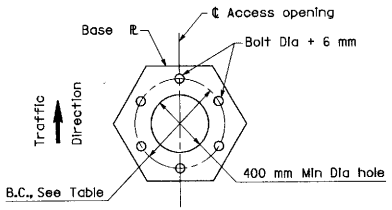

6 BOLTS

BASE PLATE DETAILS

See Note 6

NOTES

1. Pole details shall suit the lowering device and this foundation plan. Pole details shall be submitted to the Engineer for approval.
2. Pole finish shall be galvanized.
3. For number of luminaires to be mounted on the pole, see Electrical Plans.
4. Foundation design is based on a maximum of 10 luminaires. Design wind velocity 129 km/h.
5. Slip fit length shall not be less than 1.5 DL minus 50 mm.
6. Base plate shape optional.

STATE OF CALIFORNIA
DEPARTMENT OF TRANSPORTATION

LIGHTING STANDARDS 24.4 m TO 48.8 m HIGH MAST LIGHT POLE FOUNDATION DETAILS

NO SCALE

ALL DIMENSIONS ARE IN MILLIMETERS UNLESS OTHERWISE SHOWN

ES-6C

STD. PLAN ES-6C

Return to Table of Contents

DIST	COUNTY	ROUTE	KILOMETER POST TOTAL PROJECT	SHEET NO.	TOTAL SHEETS

California Metric

REGISTERED CIVIL ENGINEER

July 1, 1997
PLANS APPROVAL DATE

REGISTERED PROFESSIONAL ENGINEER Jeffrey B. Woody No. C41260 Exp. 3-31-99 CIVIL STATE OF CALIFORNIA

The State of California or its officers or agents shall not be responsible for the accuracy or completeness of electronic copies of this plan sheet.

LUMINAIRE ARM DATA

PROJECTED LENGTH	THICKNESS	MINIMUM OD @ POLE	MOUNTING HEIGHT
(m)	(mm)	(mm)	(m)
* 1.8	3.04	83	11.2±
2.4		89	11.4±
3.1		95	11.6±
3.7		95	11.9±
4.6		108	12.0±
** 6.1	4.55	127	11.3±

* Type 30 - arm length 1.8 m - 4.6 m maximum

** Type 31 - arm lengths 6.1 mm

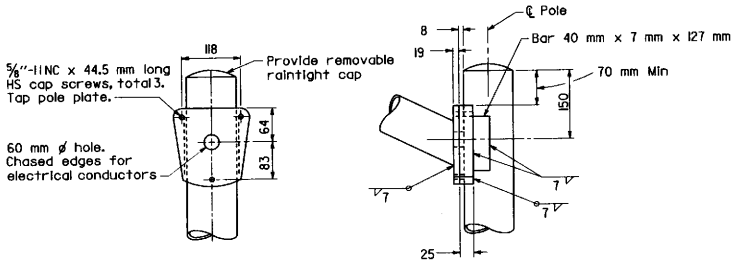

DETAIL A - TYPE 30

NOTES

1. Sheet steel shall have a minimum yield of 276 MPa.
2. For slip base details see Standard Plan ES-6E.
3. For Type 30 fixed base use Type 22 on Standard Plan ES-6B.
4. For Type 31 fixed base use Type 32 base plate, anchor bolts, and foundation on Standard Plan ES-6DA.
5. Handhole shall be located on downstream side of traffic unless noted otherwise on plans.
6. For additional general notes refer to Standard Plan ES-6S.

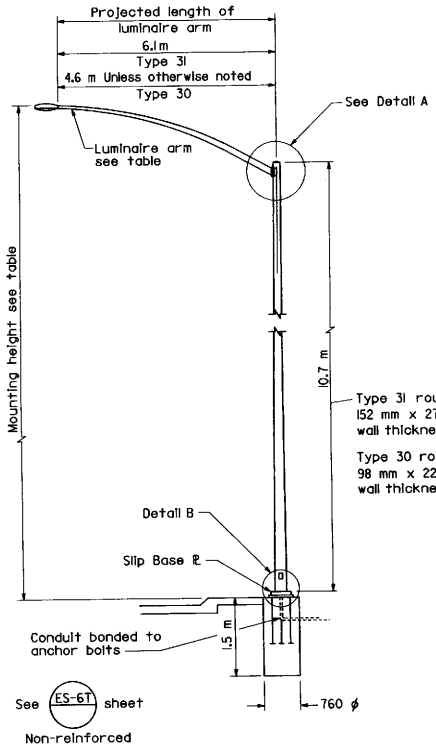

ELEVATION

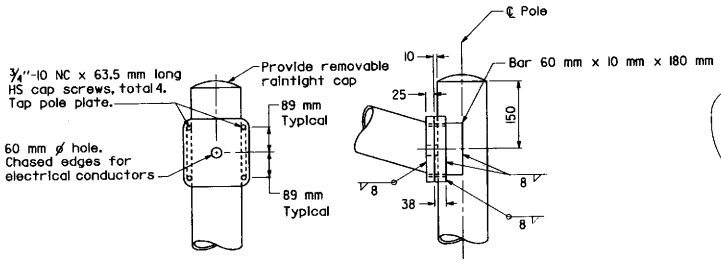

DETAIL A - TYPE 31

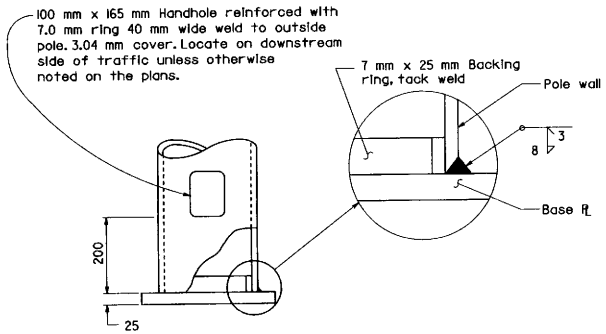

DETAIL B

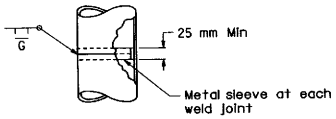

POLE SPLICE

STATE OF CALIFORNIA
DEPARTMENT OF TRANSPORTATION

LIGHTING STANDARDS TYPES 30 AND 31

NO SCALE

ALL DIMENSIONS ARE IN MILLIMETERS UNLESS OTHERWISE SHOWN

ES-6D

STD. PLAN ES-6D

Return to Table of Contents

DIST	COUNTY	ROUTE	KILOMETER POST TOTAL PROJECT	SHEET NO.	TOTAL SHEETS

California Metric

REGISTERED CIVIL ENGINEER

July 1, 1997
PLANS APPROVAL DATE

REGISTERED PROFESSIONAL ENGINEER Jeffrey B. Woody No. C41260 Exp. 3-31-99 CIVIL STATE OF CALIFORNIA

The State of California or its officers or agents shall not be responsible for the accuracy or completeness of electronic copies of this plan sheet.

NOTES

1. Plates shall conform to ASTM A36M, A-36, except as noted.
2. In lieu of the torque requirements for high strength bolts, cap screws shall be tightened by the turn-of-nut method 1/3 turn from snug tight condition. No washer will be required.
3. Handhole shall be located on downstream side of traffic unless otherwise noted on the plans.

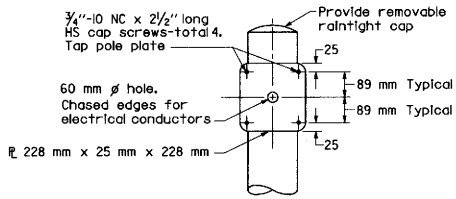

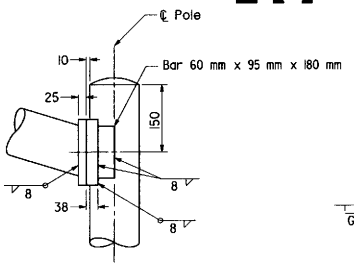

DETAIL A

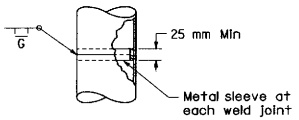

POLE SPLICE

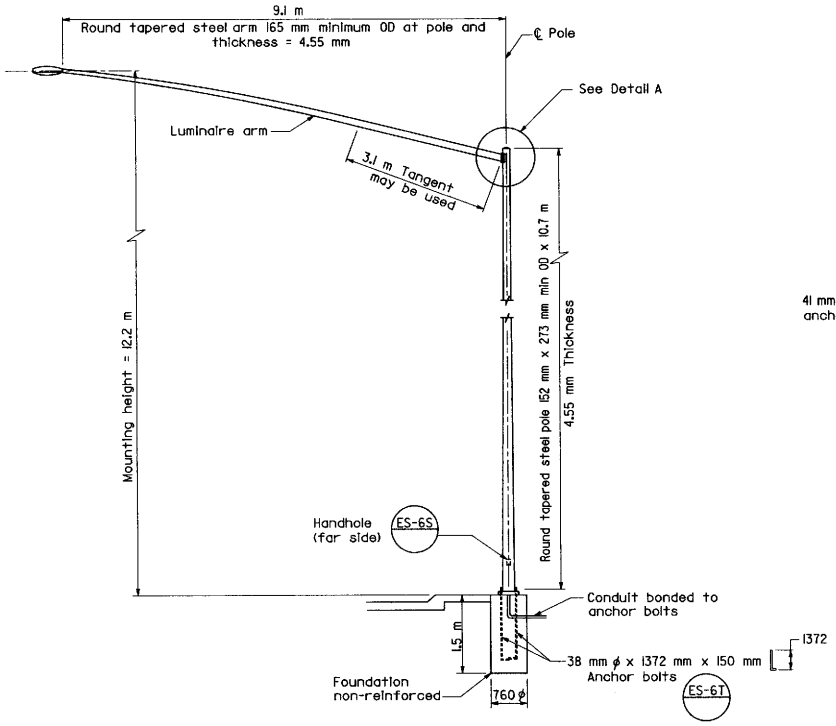

ELEVATION

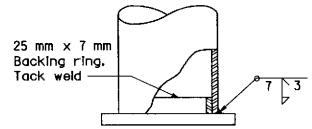

This detail shall be used for 2 ply poles.

ELEVATION

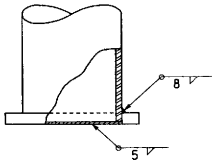

ELEVATION

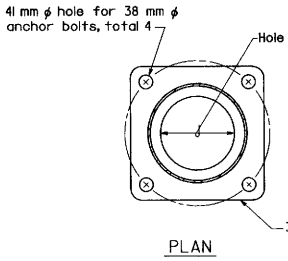

PLAN

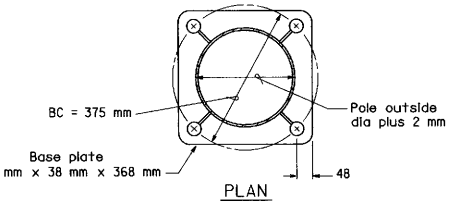

PLAN

ALTERNATIVE BASE PLATE DETAILS

STATE OF CALIFORNIA
DEPARTMENT OF TRANSPORTATION

LIGHTING STANDARDS TYPES 32

NO SCALE

ALL DIMENSIONS ARE IN MILLIMETERS UNLESS OTHERWISE SHOWN

ES-6DA

STD. PLAN ES-6DA

Return to Table of Contents

DIST	COUNTY	ROUTE	KILOMETER POST TOTAL PROJECT	SHEET NO.	TOTAL SHEETS

REGISTERED CIVIL ENGINEER

July 1, 1997
PLANS APPROVAL DATE

REGISTERED PROFESSIONAL ENGINEER Jeffrey B. Woody No. C41260 Exp. 3-31-99 CIVIL STATE OF CALIFORNIA

The State of California or its officers or agents shall not be responsible for the accuracy or completeness of electronic copies of this plan sheet.

California Metric

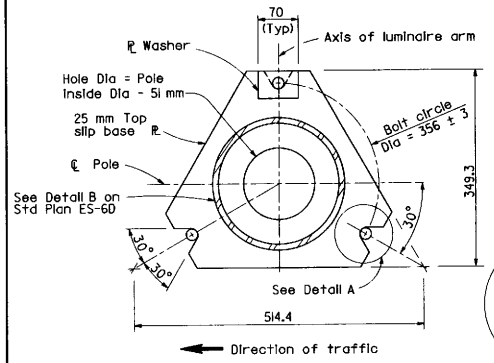

TYPICAL BASE PLATE

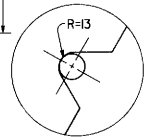

DETAIL A

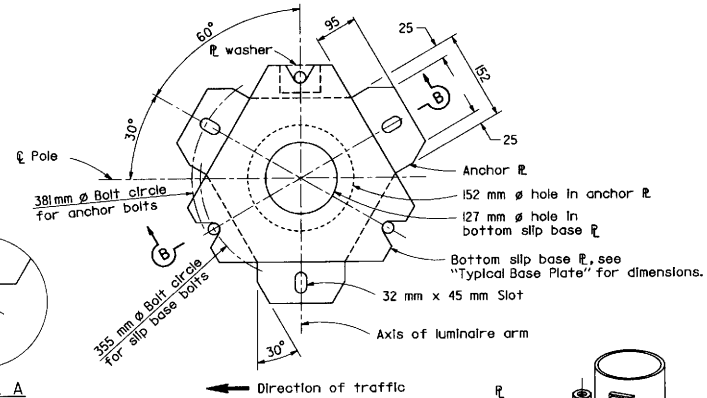

BOTTOM PLATES

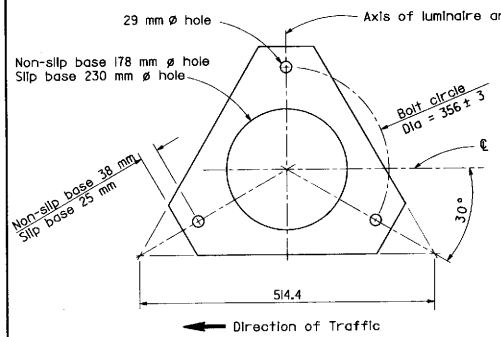

KEEPER PLATE

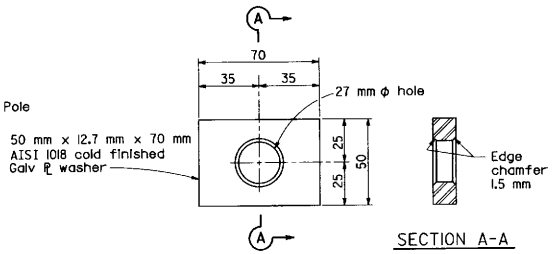

PLATE WASHER

SECTION A-A

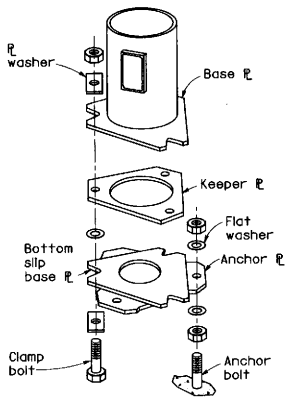

SLIP BASE DETAIL

NOTES

1. 1" HS anchor bolts, wrench tighten, torque requirement waived. For clamp bolts, see specifications.
2. Conduit shall not protrude more than 50 mm above top of foundation.
3. Locate handhole on downstream side of traffic.
4. Non-slip base to be used only where shown on the project plans.

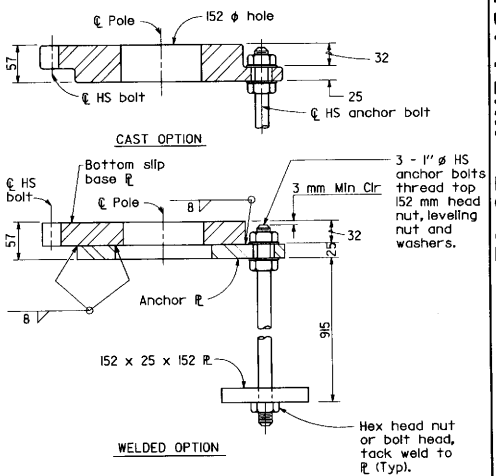

SECTION B-B

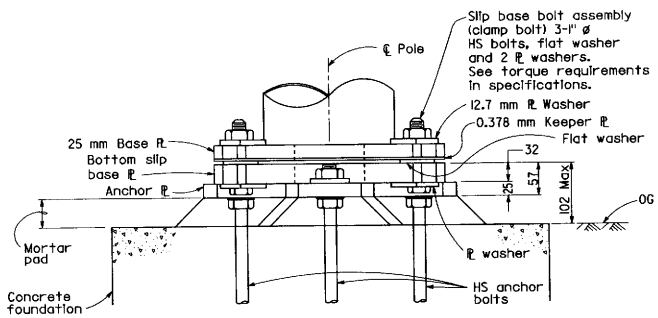

ELEVATION - SLIP BASE

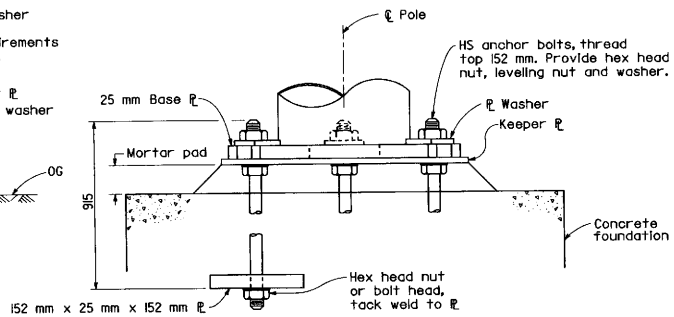

ELEVATION-NON-SLIP BASE

SEe Note 4

STATE OF CALIFORNIA
DEPARTMENT OF TRANSPORTATION

LIGHTING STANDARDS TYPES 30 AND 31 BASE PLATE DETAILS

NO SCALE

ALL DIMENSIONS ARE IN MILLIMETERS UNLESS OTHERWISE SHOWN

ES-6E

STD. PLAN ES-6E

Return to Table of Contents

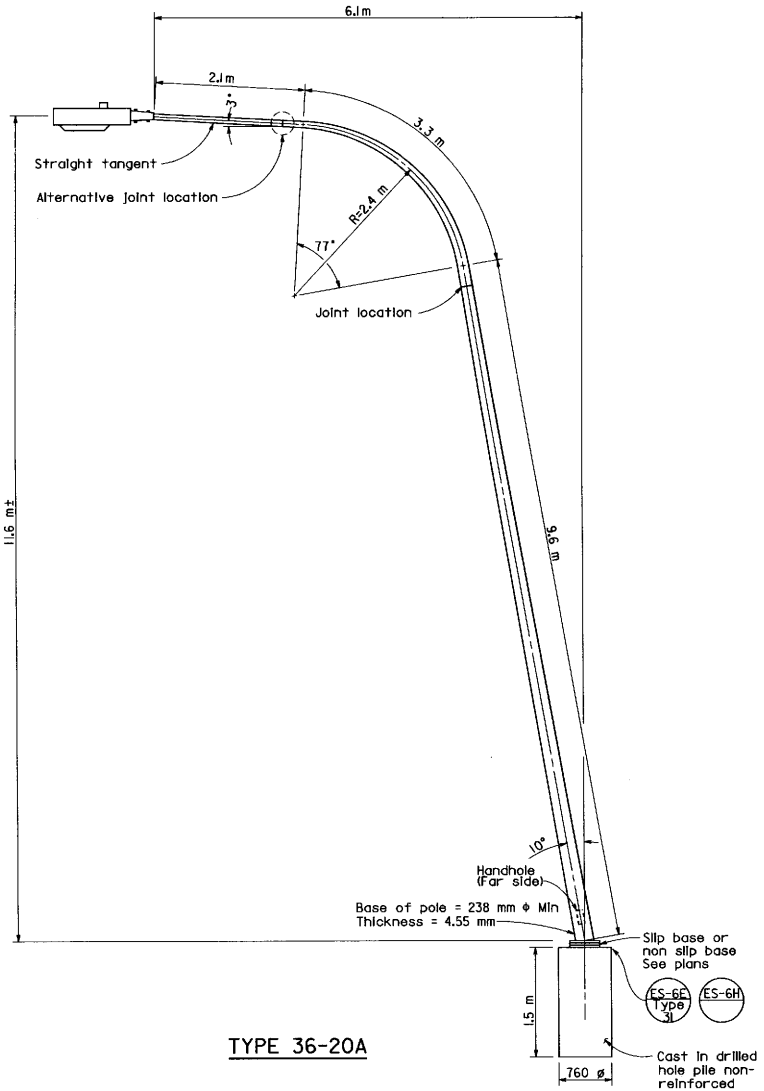

TYPE 36-20A

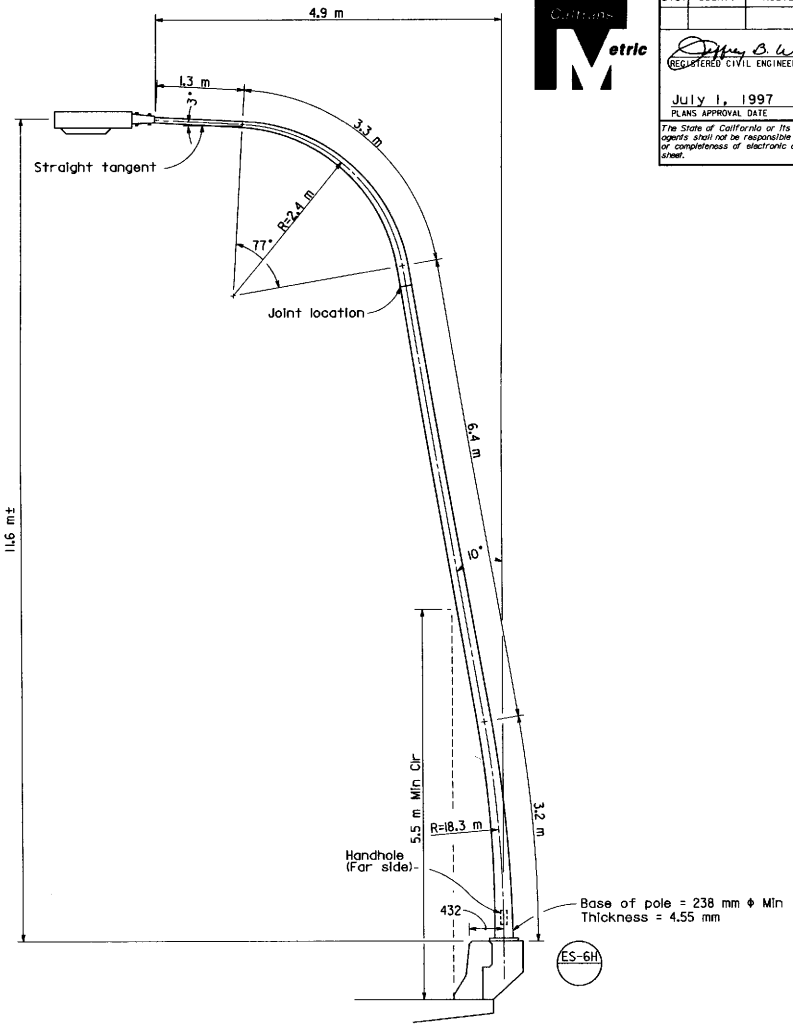

TYPE 35

DIST	COUNTY	ROUTE	KILOMETER POST TOTAL PROJECT	SHEET NO.	TOTAL SHEETS

REGISTERED CIVIL ENGINEER

July 1, 1997
PLANS APPROVAL DATE

The State of California or its officers or agents shall not be responsible for the accuracy or completeness of electronic copies of this plan sheet.

REGISTERED PROFESSIONAL ENGINEER
Jeffrey B. Woody
No. C41260
Exp. 3-31-99
CIVIL
STATE OF CALIFORNIA

Metric

STATE OF CALIFORNIA
DEPARTMENT OF TRANSPORTATION

LIGHTING STANDARDS
10 DEGREE TYPE

NO SCALE

ALL DIMENSIONS ARE IN
MILLIMETERS UNLESS OTHERWISE SHOWN

ES-6F

STD. PLAN ES-6F

Return to Table of Contents

DIST	COUNTY	ROUTE	KILOMETER POST TOTAL PROJECT	SHEET NO.	TOTAL SHEETS

California Metric

REGISTERED CIVIL ENGINEER

July 1, 1997
PLANS APPROVAL DATE

REGISTERED PROFESSIONAL ENGINEER Jeffrey B. Woody No. C41260 Exp. 3-31-99 CIVIL STATE OF CALIFORNIA

The State of California or its officers or agents shall not be responsible for the accuracy or completeness of electronic copies of this plan sheet.

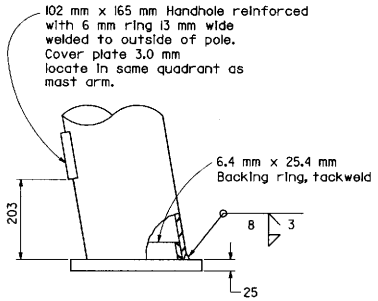

ELEVATION

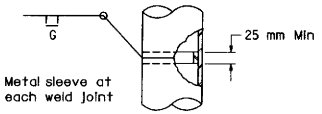

POLE SPLICE

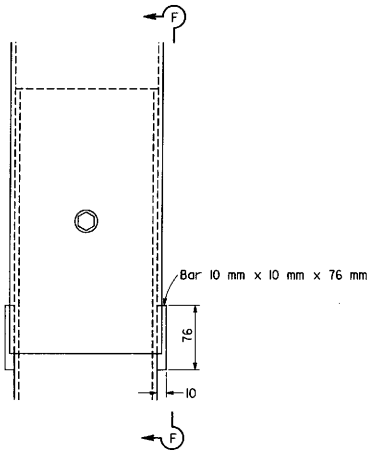

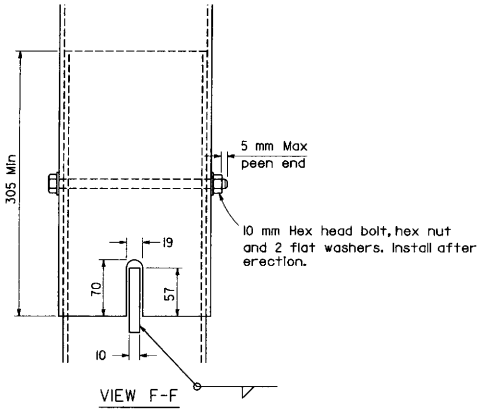

VIEW F-F

SLIP JOINT DETAILS

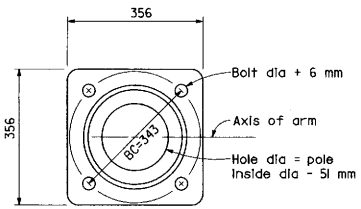

PLAN TYPE 35, 36

BASE PLATE DETAILS

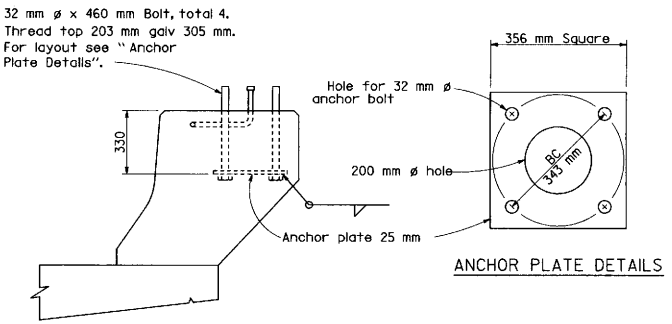

ANCHORAGE DETAILS
TYPE 35

ANCHOR PLATE DETAILS

NOTES

1. Pole and arm configurations shown are the final form when erected in place. Provide camber as necessary.
2. Poles and arms shall be round, tapered steel tubes with a taper of
3. Alternative slip joint or sleeve joint designs may be submitted with calculations to the Engineer for approval.
4. Knee radius 2.4 m minimum - 3.1 m maximum.
5. Tube bends shall be made in a manner to prevent buckling or crimpling.
6. A 51 mm pipe tenon, 203 mm maximum long may be used for the luminaire connection.

STATE OF CALIFORNIA
DEPARTMENT OF TRANSPORTATION

LIGHTING STANDARDS 10 DEGREE TYPE DETAILS

NO SCALE

ALL DIMENSIONS ARE IN MILLIMETERS UNLESS OTHERWISE SHOWN

ES-6H

STD. PLAN ES-6H

Return to Table of Contents

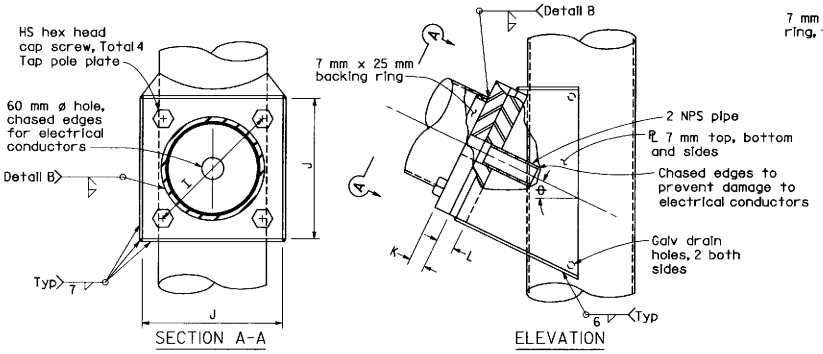

SIGNAL ARM CONNECTION DETAILS
FOR 6.1 m, 7.6 m AND 9.1 m ARMS

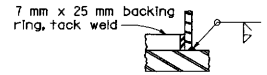

DETAIL B

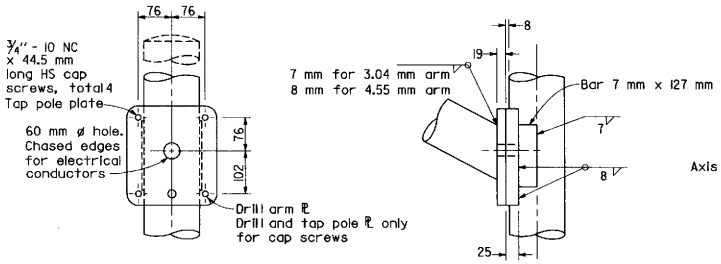

SIGNAL ARM CONNECTION DETAILS
FOR 4.6 m AND 5.5 m ARMS

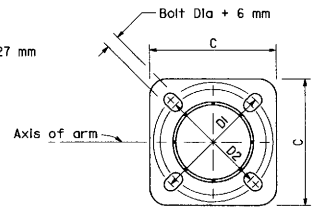

BASE PLATE

ES-6S ES-6T

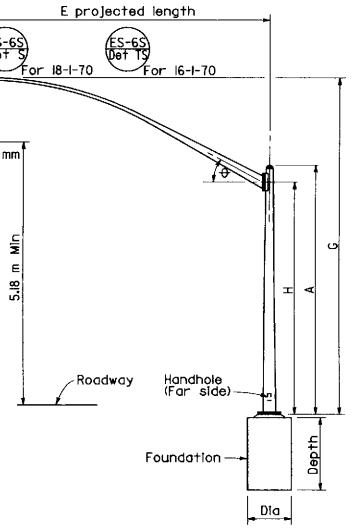

ELEVATION
TYPE 16-1-113
TYPE 18-1-113

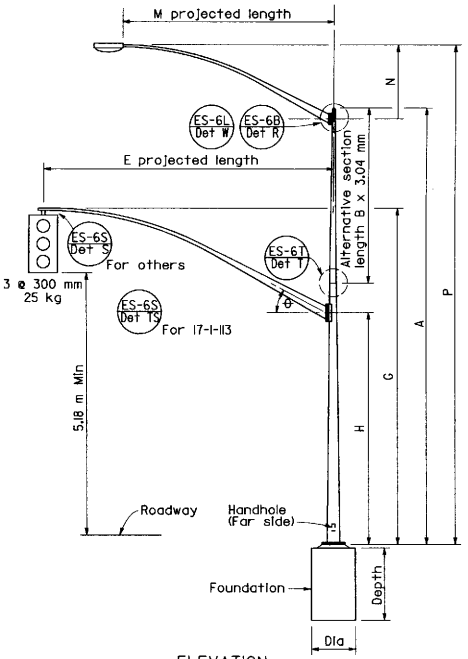

ELEVATION
TYPE 17A-1-113, 17B-1-113,
17D-1-113, 17E-1-113,
19-1-113, 19A-1-113

SIGNAL ARM DATA										
E Projected Length	G Mounting Height	H	Min OD At Pole	Thickness	I Bolt Circle	HS Cap Screws	J Plate Size	K Arm ℄ Thickness	L Pole ℄ Thickness	ø
(m)			(mm)							
4.6	6.8±	5.3	117	3.04						
5.5	7.1±		133							
6.1			165		279	1"-8NCx63.5	267	25	31	23°
7.6	6.9±	4.9	185							
9.1	7.0±	4.9	203							

LUMINAIRE ARM DATA					
M Projected Length	N Rise	Min OD at Pole	Thickness	P Mounting Height 9.1 Pole	P Mounting Height 10.7 Pole
(m)	(mm)			(m)	
1.8	610±	83	3.04	9.6±	11.1±
2.4	760±	89		9.8±	11.3±
3.1	990±	98		10.0±	11.5±
3.7	1290±			10.3±	11.8±
4.6	1450±	108		10.4±	12.0±

Pole Type	Load Case	Wind Velocity km/h	POLE DATA: A Height	Min OD Base	Min OD Top	Thickness	Alternative Section B Length	Alternative Section Bottom	Alternative Section Top	BASE PLATE DATA: C	D1	D2	Thickness	Anchor Bolts Size	Anchor Bolts Bolt Circle	Luminaire Arm	Signal Arm	CIDH PILE FOUNDATION: Diameter	Depth	Reinforced
			(m)	(mm)			(m)	(mm)		(mm)						(m)		(mm)	(m)	
16-1-113	1	113	5.6	203	140	4.55	None			304	292	279	25	25 ø x 915 x 102	279	None	4.6 - 6.1	760	1.5	No
17E-1-113			9.1		98		3.1	133	98	304	292	279		32 ø x 1067 x 102		1.8-4.6 3.7	4.6	1070		
17D-1-113																1.8-4.6 3.7	5.5			
17B-1-113																1.8-4.6 4.6	6.1			
17A-1-113			10.7		113		4.6		114						381	1.8-4.6 4.6	4.6 5.5 or 6.1			
18-1-113			5.2	238	177		None	92	0	406	381		32	38 ø x1067x 152		None	7.6 or 9.1	760	1.8	Yes (ES-6T)
19-1-113			9.1		133		3.1		133							1.8-4.6 3.7				
19A-1-113			10.7	273	150		4.6	203	150							1.8-4.6 4.6				

☐ Indicates arm length to be used unless otherwise noted on plans.

Caltrans Metric

DIST	COUNTY	ROUTE	KILOMETER POST TOTAL PROJECT	SHEET NO.	TOTAL SHEETS

REGISTERED CIVIL ENGINEER
July 1, 1997
PLANS APPROVAL DATE
REGISTERED PROFESSIONAL ENGINEER Jeffrey B. Woody No. C41260 Exp. 3-31-99 CIVIL STATE OF CALIFORNIA
The State of California or its officers or agents shall not be responsible for the accuracy or completeness of electronic copies of this plan sheet.

STATE OF CALIFORNIA
DEPARTMENT OF TRANSPORTATION

SIGNAL AND LIGHTING STANDARDS
CASE 1 ARM LOADING
WIND VELOCITY=113 km/h
ARM LENGTHS 4.6 m TO 9.1 m

NO SCALE

ALL DIMENSIONS ARE IN MILLIMETERS UNLESS OTHERWISE SHOWN

ES-6J

STD. PLAN ES-6J

Return to Table of Contents

DIST	COUNTY	ROUTE	KILOMETER POST TOTAL PROJECT	SHEET NO.	TOTAL SHEETS

Caltrans Metric

REGISTERED CIVIL ENGINEER — Jeffrey B. Woody

July 1, 1997
PLANS APPROVAL DATE

REGISTERED PROFESSIONAL ENGINEER — Jeffrey B. Woody No. C41260 Exp. 3-31-99 CIVIL — STATE OF CALIFORNIA

The State of California or its officers or agents shall not be responsible for the accuracy or completeness of electronic copies of this plan sheet.

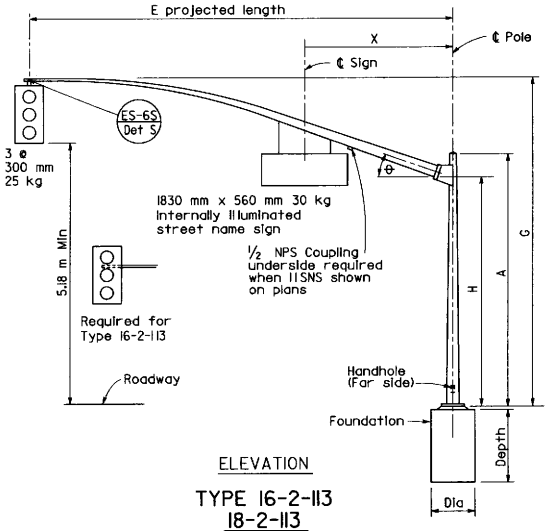

ELEVATION

TYPE 16-2-113
18-2-113

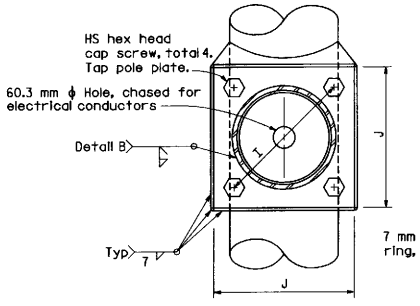

SECTION A-A

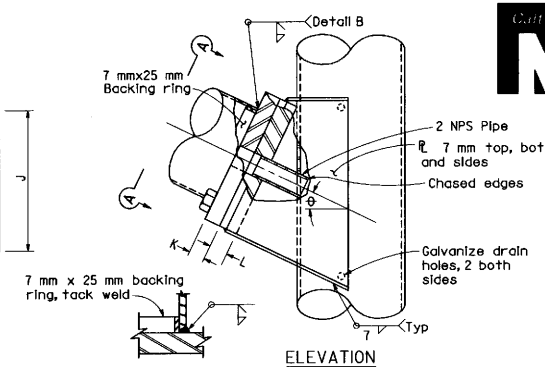

DETAIL B

ELEVATION

SIGNAL ARM CONNECTION DETAILS

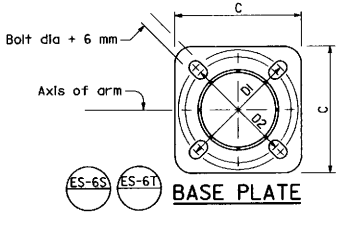

BASE PLATE

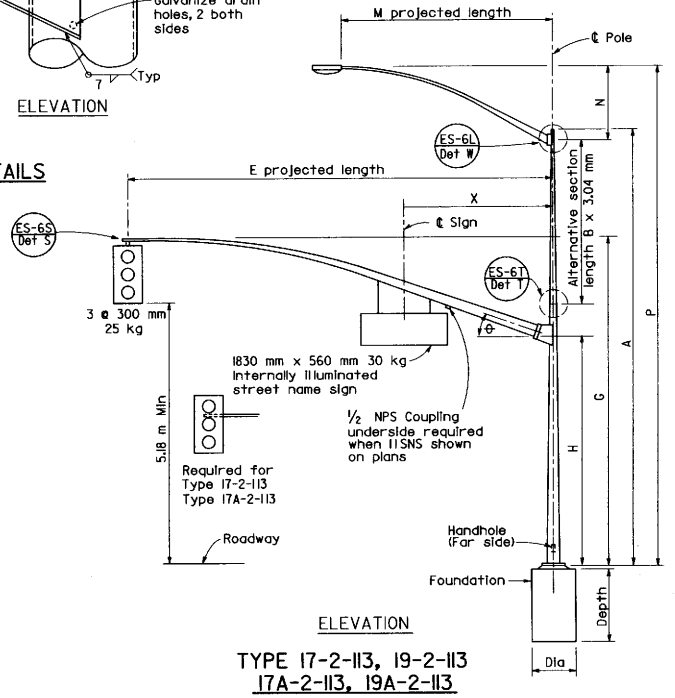

ELEVATION

TYPE 17-2-113, 19-2-113
17A-2-113, 19A-2-113

SIGNAL ARM DATA											
E Projected Length	G Mounting Height	H	Min OD At Pole	Thickness	I Bolt Circle	HS Cap Screws	J Plate Size	K Arm ℄ Thickness	L Pole ℄ Thickness	ø	X Max
(m)			(mm)								(m)
6.1	6.6±	4.9	165.1	3.04	2.79	1"-8NCx63.5	267	25	32	23°	3.2
7.6	6.9±		185.7								
9.1	7.0±		203.2								

LUMINAIRE ARM DATA					
M Projected Length	N Rise	Min OD at Pole	Thickness	P Mounting Height 9.1 Pole	P Mounting Height 10.7 Pole
(m)	(mm)			(m)	
1.8	610±	83	3.04	9.6±	11.1±
2.4	760±	89		9.8±	11.3±
3.1	990±	98		10.0±	11.5±
3.7	1290±			10.3±	11.8±
4.6	1450±	108		10.4±	12.0±

POLE DATA									BASE PLATE DATA								CIDH PILE FOUNDATION		
Pole Type	Load Case	Wind Velocity km/h	A Height	Min OD Base	Min OD Top	Thickness	Alternative Section B Length	Alternative Section Bottom	Alternative Section Top	C	DI	D2	Thickness	Anchor Bolts Size	Anchor Bolts Bolt Circle	Luminaire Arm	Signal Arm	Diameter	Depth	Reinforced
			(m)	(mm)			(m)	(mm)		(mm)							(m)	(mm)	(m)	
16-2-113	2	113	5.2	238	178	3.04	None			406	381		32	32øx1067x102	381	None	6.1	1070	1.5	No
17-2-113			9.1		133	4.55	3.0	168	133							1.8-4.6 [3.7]		760	1.8	Yes (ES-6T)
17A-2-113			10.7	273	151		4.6	203	151					38øx1067x152		1.8-4.6 [4.6]				
18-2-113			5.2	238	178		None									None	7.6 or 9.1			
19-2-113			9.1	151	168		3.0	203	168							1.8-4.6 [3.7]				
19A-2-113			10.7		151		4.6		151							1.8-4.6 [4.6]				

☐ Indicates arm length to be used unless otherwise noted on plans.

STATE OF CALIFORNIA
DEPARTMENT OF TRANSPORTATION

SIGNAL AND LIGHTING STANDARDS
CASE 2 ARM LOADING
WIND VELOCITY=113 km/h
ARM LENGTH 6.1 m TO 9.1 m

NO SCALE

ALL DIMENSIONS ARE IN MILLIMETERS UNLESS OTHERWISE SHOWN

ES-6K

STD. PLAN ES-6K

Return to Table of Contents

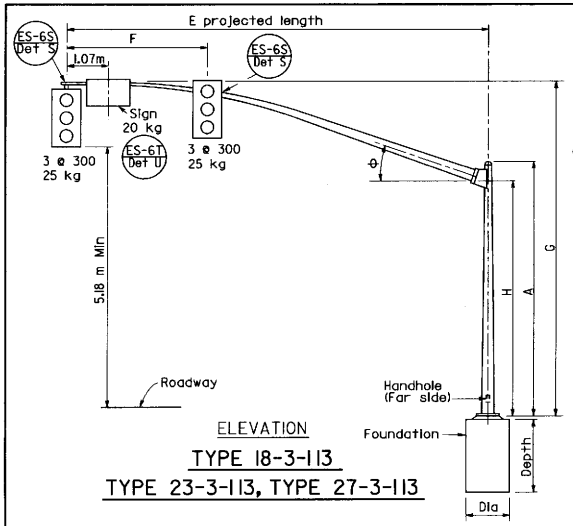

ELEVATION

TYPE 18-3-113

TYPE 23-3-113, TYPE 27-3-113

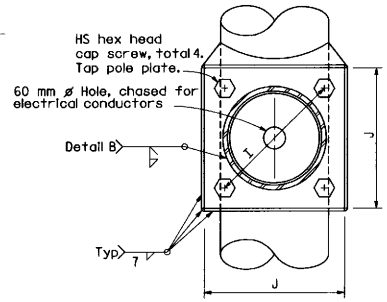

SECTION A-A

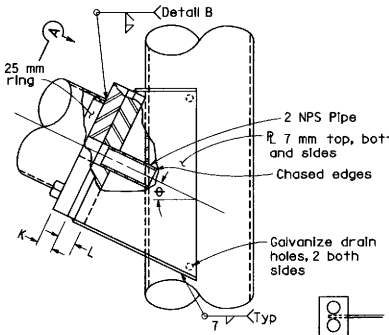

ELEVATION

SIGNAL ARM CONNECTION DETAILS

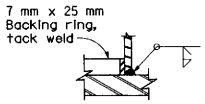

DETAIL B

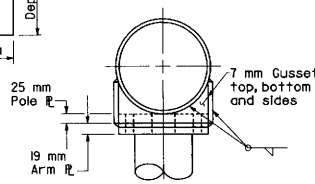

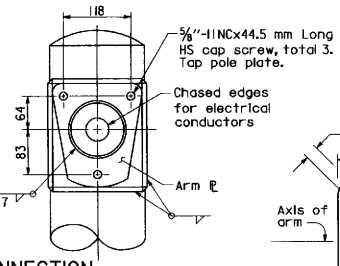

DETAIL W

LUMINAIRE ARM CONNECTION

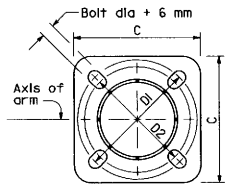

BASE PLATE

ES-6S ES-6T

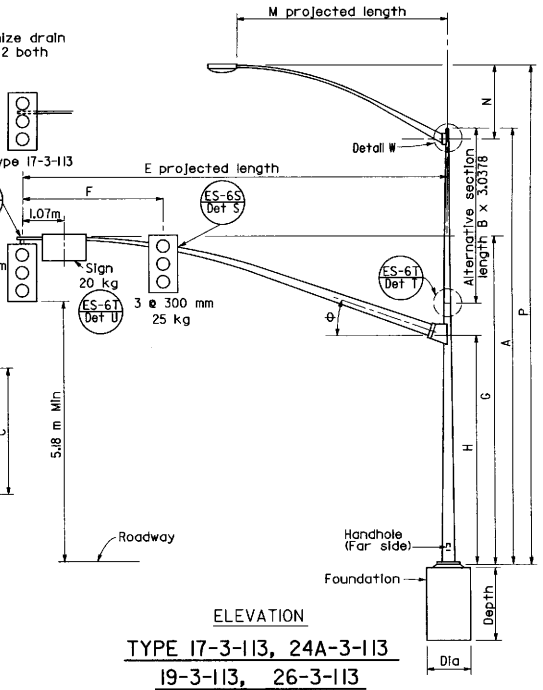

ELEVATION

TYPE 17-3-113, 24A-3-113

19-3-113, 26-3-113

19A-3-113, 26A-3-113, 24-3-113

Minimum yield of sheet steel is 331MPa

STATE OF CALIFORNIA
DEPARTMENT OF TRANSPORTATION

SIGNAL AND LIGHTING STANDARDS
CASE 3 ARM LOADING
WIND VELOCITY=113 km/h
ARM LENGTHS 4.6 m TO 13.7 m

NO SCALE

ALL DIMENSIONS ARE IN MILLIMETERS UNLESS OTHERWISE SHOWN

ES-6L

STD. PLAN ES-6L

DIST	COUNTY	ROUTE	KILOMETER POST TOTAL PROJECT	SHEET NO.	TOTAL SHEETS

REGISTERED CIVIL ENGINEER

July 1, 1997
PLANS APPROVAL DATE

Jeffrey B. Woody No. C41260 Exp. 3-31-99 CIVIL — REGISTERED PROFESSIONAL ENGINEER — STATE OF CALIFORNIA

The State of California or its officers or agents shall not be responsible for the accuracy or completeness of electronic copies of this plan sheet.

SIGNAL ARM DATA

E Projected Length	F Min. Spacing	G Mounting Height	H	Min OD At Pole	Thickness	I Bolt Circle	HS Cap Screws	J Plate Size	K Arm PL Thickness	L Pole PL Thickness	ø
(m)				(mm)							
4.5	2.4	6.8	5.3	151	4.55	280	1"-8NCx64	267	25	32	23°
6.1	2.4	6.6	4.9	165							
7.6	3.7	6.9		186							
9.1		7.0		203							
10.7	4.3			221		330	1¼"-7NCx76	330	32	38	21°
12.2	4.5			238	6.07	330		330	38	44	15°
13.7		7.2		256							

LUMINAIRE ARM DATA

M Projected Length	N Rise	Min OD at Pole	Thickness	P Mounting Height 9.1 Pole	P Mounting Height 10.7 Pole
(m)	(mm)			(m)	
1.8	610±	83	3.04	9.6±	11.1±
2.4	760±	89		9.8±	11.3±
3.1	990±	98		10.0±	11.5±
3.7	1290±			10.3±	11.8±
4.6	1450±	108		10.4±	12.0±

Pole Type	Load Case	Wind Velocity km/h	POLE DATA: A Height	Min OD Base	Min OD Top	Thickness	Alternative Section B Length	Alternative Section Bottom	Alternative Section Top	BASE PLATE DATA: C	D1	D2	Thickness	Anchor Bolts Size	Anchor Bolts Bolt Circle	Luminaire Arm	Signal Arm	CIDH PILE FOUNDATION: Diameter	Depth	Reinforced
			(m)	(mm)			(m)	(mm)		(mm)						(m)		(mm)	(m)	
17-3-113	3	113	9.1	238	133	4.55	3.0	168	133	406	381	381	32	38 ø x 1067 x 152	381	1.8-4.6 [3.7]	4.6 or [6.1]	760	2.1	Yes (ES-6T)
18-3-113			5.2	273	214		None							45 ø x 1067 x 152	419	None			2.4	
19-3-113			9.1	289	184		3.0	219	184	432	419					1.8-4.6 [3.7]	7.6 or [9.1]			
19A-3-113			10.7		168		4.6		168							1.8-4.6 [4.6]				
23-3-113			5.2	305	229		None			457	445	406	38		445	None	10.7			
24-3-113			9.1		203		3.0	238	203							1.8-4.6 [3.7]				
24A-3-113			10.7		186		4.6		186							1.8-4.6 [4.6]				
26-3-113			9.1		203	6.07	3.0		203			432				1.8-4.6 [3.7]		920		
26A-3-113			10.7		186		4.6		186							1.8-4.6 [4.6]	12.2 or [13.7]			
27-3-113			5.2		248		None									None				

☐ Indicates arm length to be used unless otherwise noted on plans.

Return to Table of Contents

DIST	COUNTY	ROUTE	KILOMETER POST TOTAL PROJECT	SHEET NO.	TOTAL SHEETS

REGISTERED CIVIL ENGINEER

July 1, 1997
PLANS APPROVAL DATE

The State of California or its officers or agents shall not be responsible for the accuracy or completeness of electronic copies of this plan sheet.

REGISTERED PROFESSIONAL ENGINEER — Jeffrey B. Woody — No. C41260 — Exp. 3-31-99 — CIVIL — STATE OF CALIFORNIA

Caltrans Metric

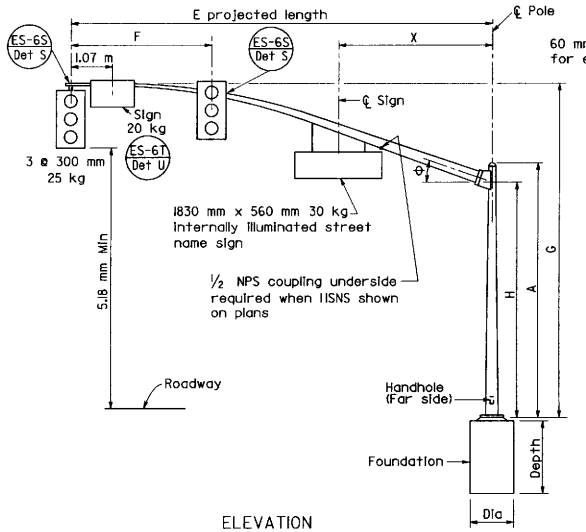

ELEVATION

TYPE 18-4-113, TYPE 23-4-113, TYPE 27-4-113

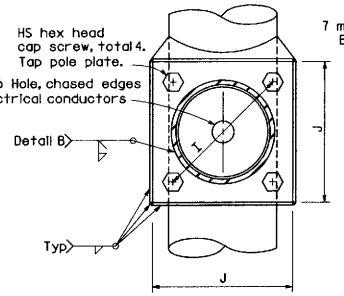

SECTION A-A

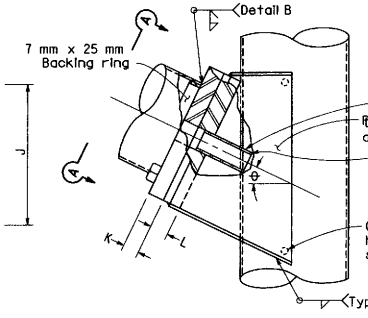

ELEVATION

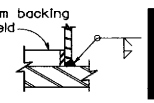

DETAIL B

SIGNAL ARM CONNECTION DETAILS

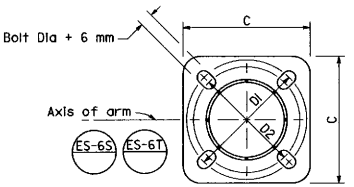

BASE PLATE

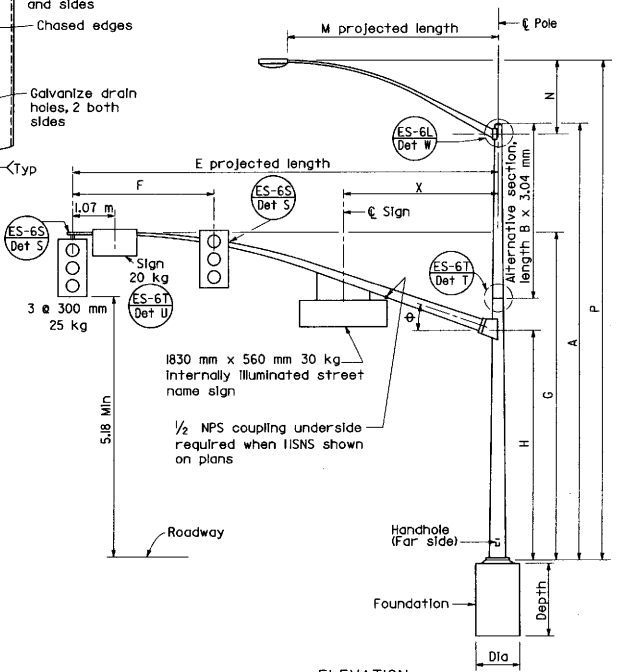

ELEVATION

TYPE 19-4-113, TYPE 24A-4-113, TYPE 19A-4-113, TYPE 26-4-113, TYPE 24-4-113, TYPE 26A-4-113

Minimum yield of sheet steel is 331 MPa.

STATE OF CALIFORNIA
DEPARTMENT OF TRANSPORTATION

SIGNAL AND LIGHTING STANDARDS
CASE 4 ARM LOADING
WIND VELOCITY=113 km/h
ARM LENGTHS 7.6 m TO 13.7 m

NO SCALE

ALL DIMENSIONS ARE IN MILLIMETERS UNLESS OTHERWISE SHOWN

ES-6M

STD. PLAN ES-6M

SIGNAL ARM DATA

E Projected Length	F Min. Spacing	G Mounting Height	H	Min OD At Pole	Thickness	I Bolt Circle	HS Cap Screws	J Plate Size	K Arm ℄ Thickness	L Pole ℄ Thickness	ø	X Max
(m)				(mm)								(m)
7.6	3.1	6.9±	4.9	186	4.55	280	1"-8NCx64	267	25	32	23°	3.2
9.1	3.7	7.0±		203					32			
10.7	4.3			221		330		330	32	38	21°	
12.2	4.6			238	6.07	330	1¼"-7NCx75	330	38	45	15°	4.0
13.7		7.2±		256								

LUMINAIRE ARM DATA

M Projected Length	N Rise	Min OD at Pole	Thickness	P Mounting Height 9.1 Pole	P Mounting Height 10.7 Pole
(m)	(mm)			(m)	
1.8	610±	83	3.04	9.6±	11.2±
2.4	760±	89		9.8±	11.3±
3.1	990±	98		10.0±	11.5±
3.7	1290±			10.3±	11.8±
4.6	1450±	108		10.5±	12.0±

POLE DATA / BASE PLATE DATA / CIDH PILE FOUNDATION

Pole Type	Load Case	Wind Velocity km/h	A Height	Min OD Base	Min OD Top	Thickness	Alternative Section B Length	Alternative Section Bottom	Alternative Section Top	C	D1	D2	Thickness	Anchor Bolts Size	Anchor Bolts Bolt Circle	Luminaire Arm	Signal Arm	CIDH Diameter	CIDH Depth	Reinforced
			(m)	(mm)			(m)	(mm)		(mm)						(m)		(mm)	(m)	
18-4-113	4	113	5.2	273	214	4.55	None			432	420	381	32	45 ø x 1067 x 152	381	None	7.6 or [9.1]	760	2.4	Yes (ES-6T)
19-4-113			9.1		168	6.07	3.1	203	168						420	1.8-4.6 [3.7]				
19A-4-113			10.7		151		4.6		151							1.8-4.6 [4.6]				
23-4-113			5.2	289	229	6.07	None			457	445	406	38		445	None	10.7			
24-4-113			9.1	318	210	4.55	3.1	246	210							1.8-4.6 [3.7]				
24A-4-113			10.7		192		4.6		192							1.8-4.6 [4.6]				
26-4-113			9.1	318	213	6.07	None	238	203			432				1.8-4.6 [3.7]	12.2 or [13.7]	910		
26A-4-113			10.7	318	192		3.1	246	192							1.8-4.6 [4.6]				
27-4-113			5.2	305	248		4.6									None				

[ ] Indicates arm length to be used unless otherwise noted on plans.

Return to Table of Contents

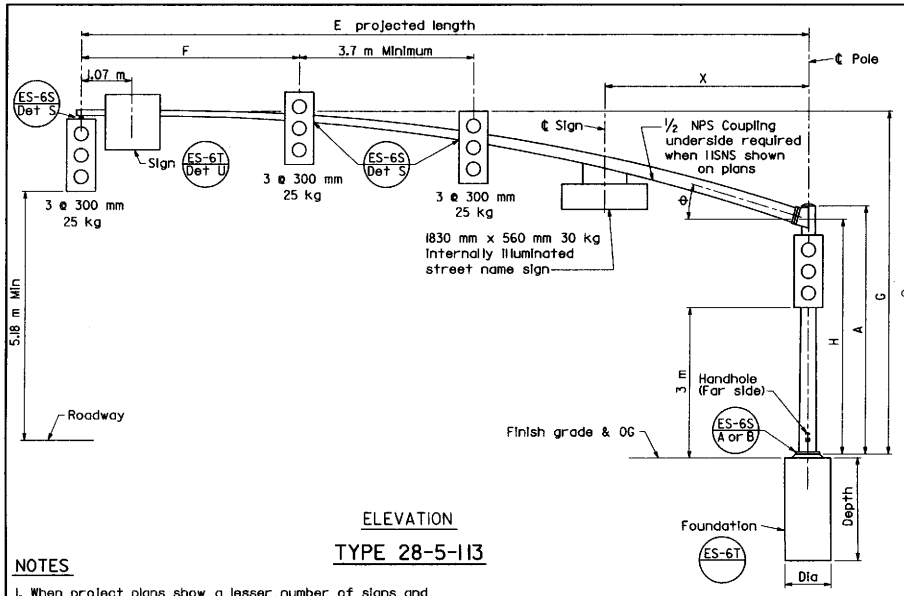

ELEVATION

TYPE 28-5-113

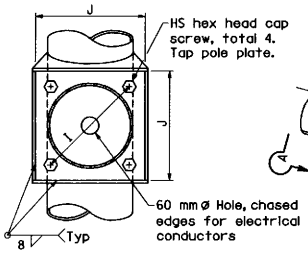

SECTION A-A

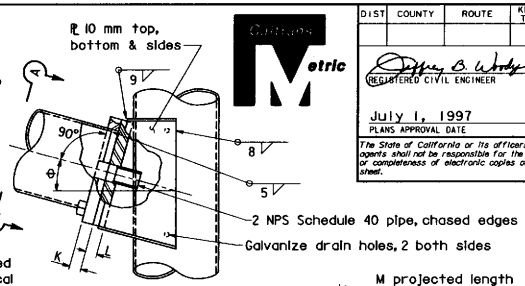

ELEVATION

SIGNAL ARM CONNECTION DETAILS

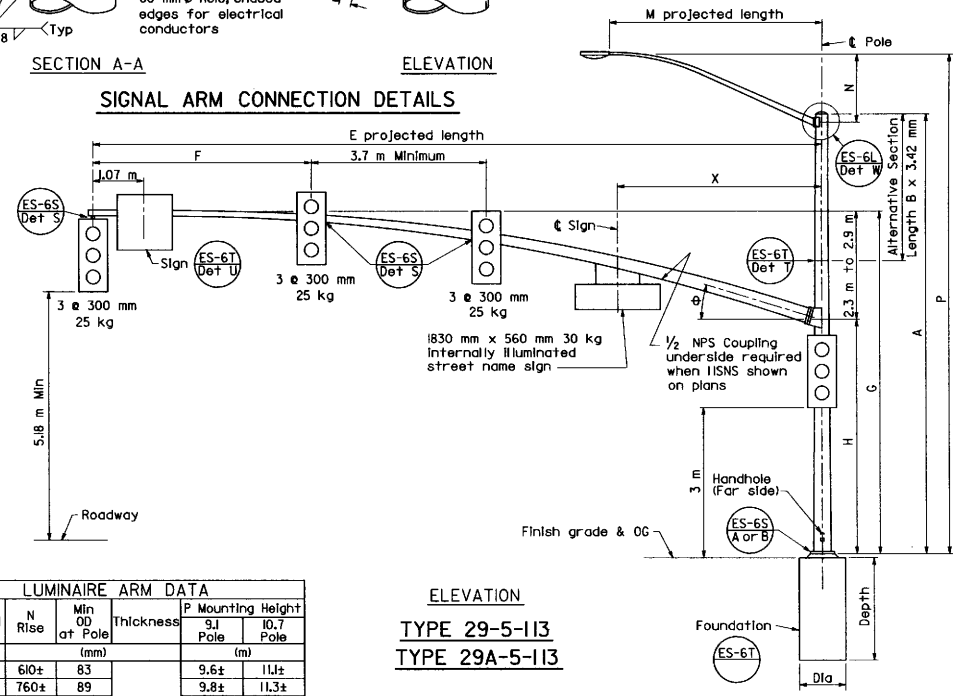

ELEVATION

TYPE 29-5-113

TYPE 29A-5-113

NOTES

1. When project plans show a lesser number of signs and signals, the project plans shall prevail.
2. For details not shown see Standard Plans and Electrical Details.
3. Minimum yield of sheet steel is 331 MPa.

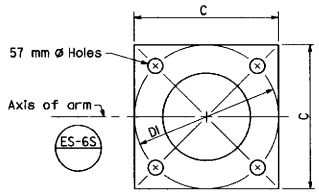

BASE PLATE

SIGNAL ARM DATA												
E Projected Length	F Min. Spacing	G Mounting Height	H	Min OD At Pole	Thickness	I Bolt Circle	HS Cap Screws	J Plate Size	K Arm ℄ Thickness	L Pole ℄ Thickness	ø	X Max
(m)				(mm)								(m)
15.2	4.6	7.2	4.9	291	4.55	400	1½"-6NC-83	381	45	45	15°	4.3
16.8				305								

LUMINAIRE ARM DATA					
M Projected Length	N Rise	Min OD at Pole	Thickness	P Mounting Height 9.1 Pole	P Mounting Height 10.7 Pole
(m)	(mm)			(m)	
1.8	610±	83	3.04	9.6±	11.1±
2.4	760±	89		9.8±	11.3±
3.1	990±	98		10.0±	11.5±
3.7	1290±	98		10.3±	11.8±
*4.6	1450±	108		10.4±	12.0±

* Indicated use 4.6 m projected length unless shown otherwise

Pole Type	Load Case	Wind Velocity km/h	POLE DATA: A Height	Min OD Base	Min OD Top	Thickness	Alternative Section B Length	Alternative Section Bottom	Alternative Section Top	BASE PLATE DATA: C	DI	D2	Thickness	Anchor Bolts Size	Anchor Bolts Bolt Circle	Luminaire Arm	Signal Arm	CIDH PILE FOUNDATION: Diameter	Depth	Reinforced
			(m)	(mm)			(m)	(mm)		(mm)						(m)		(mm)	(m)	
28-5-113	5	113	5.2	356	297	6.07	None	286	251	508	508		45	51 ø x 1067 x 152	508	None	15.2 or 16.8	920	2.5	Yes (ES-6T)
29-5-113			9.1		251		3.1									1.8-4.6 4.6				
29A-5-113			10.7		233		4.6		233								16.8			

☐ Indicates arm length to be used unless otherwise noted on plans.

STATE OF CALIFORNIA
DEPARTMENT OF TRANSPORTATION

SIGNAL AND LIGHTING STANDARDS
CASE 5 ARM LOADING
WIND VELOCITY=113 km/h
ARM LENGTHS 15.2 m TO 16.8 m

NO SCALE

ALL DIMENSIONS ARE IN MILLIMETERS UNLESS OTHERWISE SHOWN

ES-6MA

DIST	COUNTY	ROUTE	KILOMETER POST TOTAL PROJECT	SHEET NO.	TOTAL SHEETS

REGISTERED CIVIL ENGINEER

July 1, 1997
PLANS APPROVAL DATE

The State of California or its officers or agents shall not be responsible for the accuracy or completeness of electronic copies of this plan sheet.

REGISTERED PROFESSIONAL ENGINEER Jeffrey B. Woody No. C41260 Exp. 3-31-99 CIVIL STATE OF CALIFORNIA

STD. PLAN ES-6MA

Return to Table of Contents

DIST	COUNTY	ROUTE	KILOMETER POST TOTAL PROJECT	SHEET NO.	TOTAL SHEETS

Jeffrey B. Woody
REGISTERED CIVIL ENGINEER

July 1, 1997
PLANS APPROVAL DATE

REGISTERED PROFESSIONAL ENGINEER
Jeffrey B. Woody
No. C41260
Exp. 3-31-99
CIVIL
STATE OF CALIFORNIA

The State of California or its officers or agents shall not be responsible for the accuracy or completeness of electronic copies of this plan sheet.

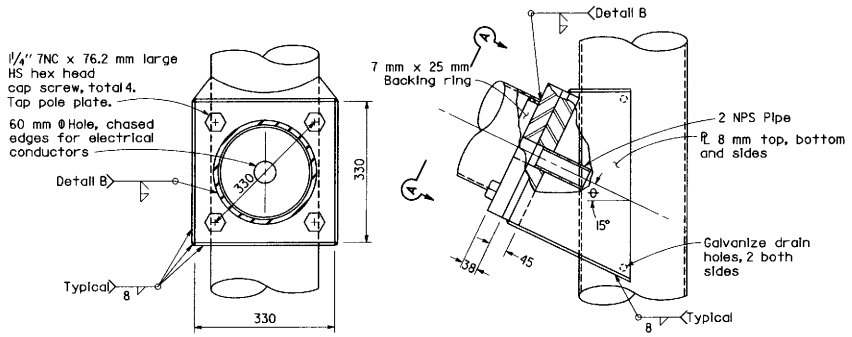

SIGNAL ARM CONNECTION DETAILS

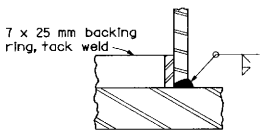

DETAIL B

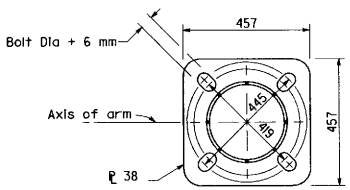

44 mm Ø x 1524 mm x 152.4 mm Anchor bolts set to 444 mm bolt circle

BASE PLATE

ES-6S ES-6T

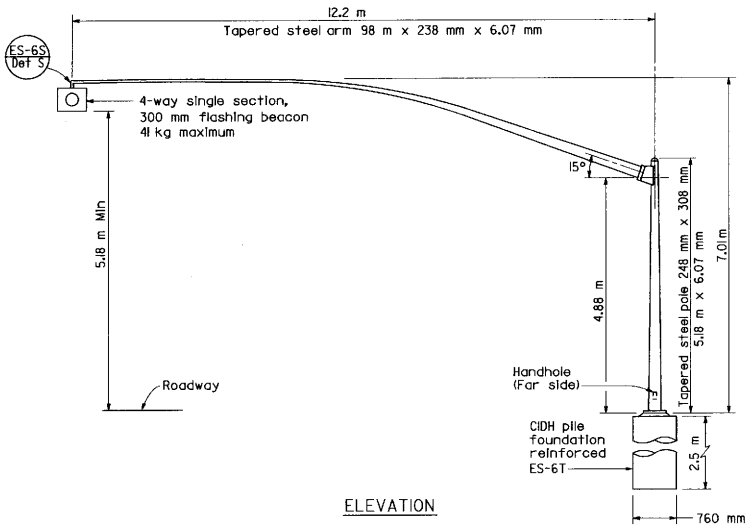

ELEVATION

NOTE

For details not shown see Standard Plans ES-6S and ES-6T.

STATE OF CALIFORNIA
DEPARTMENT OF TRANSPORTATION

SIGNAL AND LIGHTING STANDARDS TYPE 40-0-129

NO SCALE

ALL DIMENSIONS ARE IN MILLIMETERS UNLESS OTHERWISE SHOWN

ES-6N

STD. PLAN ES-6N

Return to Table of Contents

DIST	COUNTY	ROUTE	KILOMETER POST TOTAL PROJECT	SHEET NO.	TOTAL SHEETS

Caltrans Metric

REGISTERED CIVIL ENGINEER

July 1, 1997
PLANS APPROVAL DATE

Jeffrey B. Woody No. C41260 Exp. 3-31-99 CIVIL — REGISTERED PROFESSIONAL ENGINEER — STATE OF CALIFORNIA

The State of California or its officers or agents shall not be responsible for the accuracy or completeness of electronic copies of this plan sheet.

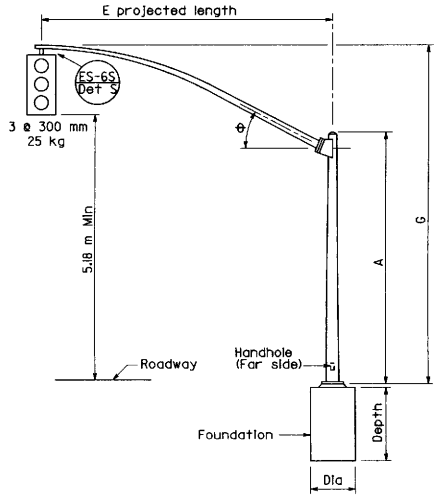

ELEVATION

TYPE 18-1-129

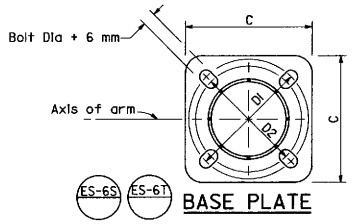

BASE PLATE

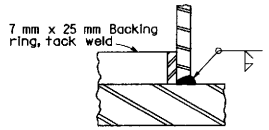

DETAIL B

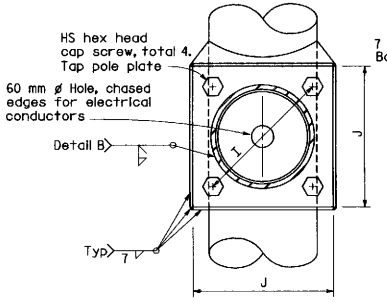

SECTION A-A

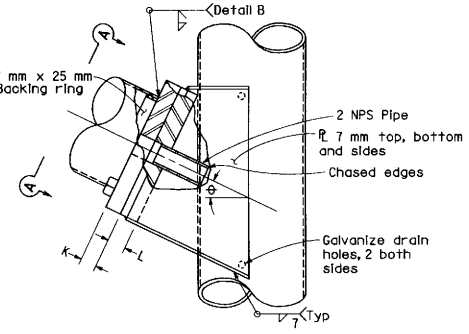

ELEVATION

SIGNAL ARM CONNECTION DETAILS

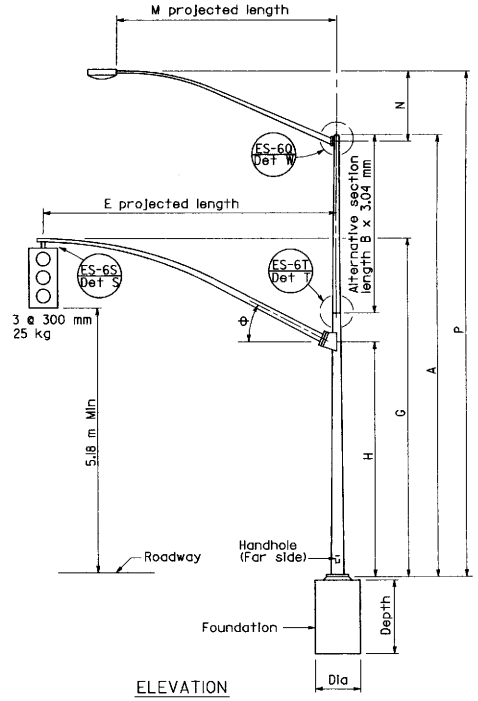

ELEVATION

TYPE 19-1-129, 19A-1-129

SIGNAL ARM DATA										
E Projected Length	G Mounting Height	H	Min OD At Pole	Thickness	I Bolt Circle	HS Cap Screws	J Plate Size	K Arm PL Thickness	L Pole PL Thickness	ø
(m)			(mm)							
7.6	6.9±	4.9	185.7	3.04	279	1"-8NCx64	267	25	32	23°
9.1	7.0±		203.2							

LUMINAIRE ARM DATA					
M Projected Length	N Rise	Min OD at Pole	Thickness	P Mounting Height 9.1 Pole	P Mounting Height 10.7 Pole
(m)	(mm)			(m)	
1.8	610±	83	3.04	9.6±	11.1±
2.4	760±	89		9.8±	11.3±
3.1	990±	98		10.0±	11.5±
3.7	1290±			10.3±	11.8±
4.6	1450±	108		10.4±	12.0±

Pole Type	Load Case	Wind Velocity km/h	POLE DATA: A Height	Min OD Base	Min OD Top	Thickness	Alternative Section B Length	Alternative Section Bottom	Alternative Section Top	BASE PLATE DATA: C	D1	D2	Thickness	Anchor Bolts Size	Anchor Bolts Bolt Circle	Luminaire Arm ☐	Signal Arm	CIDH PILE FOUNDATION: Diameter	Depth	Reinforced
			(m)	(mm)			(m)	(mm)		(mm)				(mm)		(m)		(mm)	(m)	
18-1-129	1	129	5.2	238	178	4.55	None			406	381		32	32 ø x 1067 x 102	381	None	7.6 or 9.1	760	2.1	Yes (ES-6T)
19-1-129			9.1	273	168		3.0	203	168					38 ø x 1067 x 152		1.8-4.6 3.6				
19A-1-129			10.7		151		4.6		151							1.8-4.6 4.6				

☐ Indicates arm length to be used unless otherwise noted on plans.

STATE OF CALIFORNIA
DEPARTMENT OF TRANSPORTATION

SIGNAL AND LIGHTING STANDARDS
CASE 1 ARM LOADING
WIND VELOCITY=129 km/h
ARM LENGTHS 7.6 m TO 9.1 m

NO SCALE

ALL DIMENSIONS ARE IN MILLIMETERS UNLESS OTHERWISE SHOWN

ES-60

STD. PLAN ES-60

Return to Table of Contents

DIST	COUNTY	ROUTE	KILOMETER POST TOTAL PROJECT	SHEET NO.	TOTAL SHEETS

Metric

REGISTERED CIVIL ENGINEER

July 1, 1997
PLANS APPROVAL DATE

REGISTERED PROFESSIONAL ENGINEER Jeffrey B. Woody No. C41260 Exp. 3-31-99 CIVIL STATE OF CALIFORNIA

The State of California or its officers or agents shall not be responsible for the accuracy or completeness of electronic copies of this plan sheet.

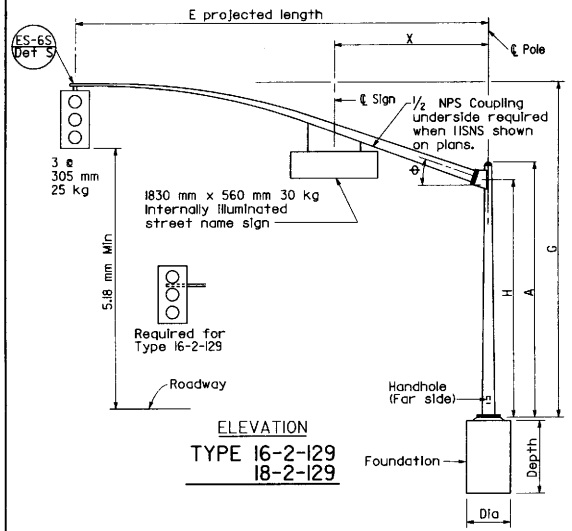

ELEVATION
TYPE 16-2-129
18-2-129

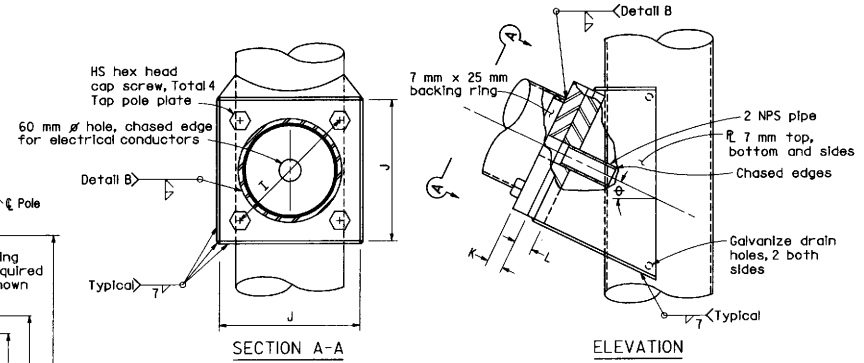

SECTION A-A

ELEVATION

SIGNAL ARM CONNECTION DETAILS

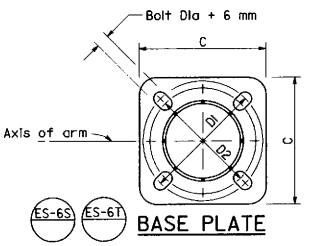

BASE PLATE

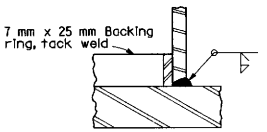

DETAIL B

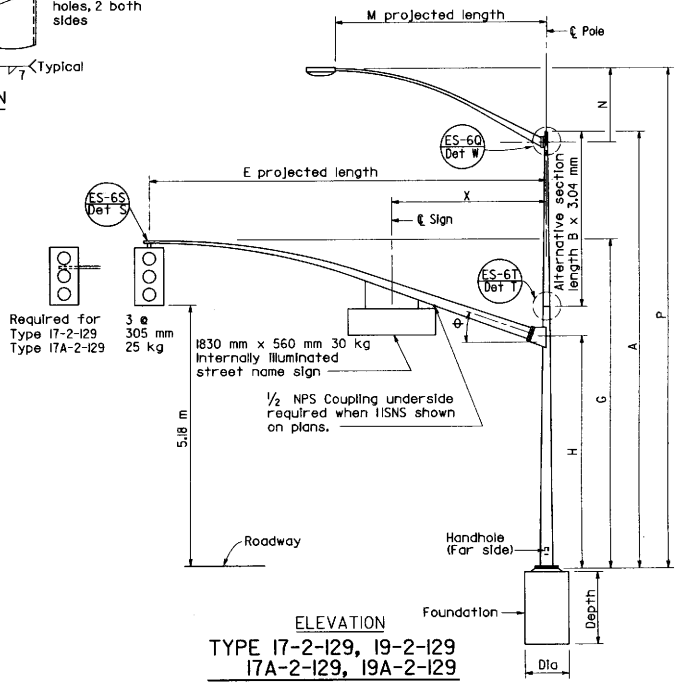

ELEVATION
TYPE 17-2-129, 19-2-129
17A-2-129, 19A-2-129

SIGNAL ARM DATA											
E Projected Length	G Mounting Height	H	Min OD At Pole	Thickness	I Bolt Circle	HS Cap Screws	J Plate Size	K Arm ℄ Thickness	L Pole ℄ Thickness	ø	X Max
(m)			(mm)								(m)
6.1	6.6±	4.9	165	4.55	280	1"-8NCx63.5	267	25	32	23°	3.2
7.6	6.9±		186								
9.1	7.0±		203								

LUMINAIRE ARM DATA					
M Projected Length	N Rise	Min OD at Pole	Thickness	P Mounting Height 9.1 Pole	P Mounting Height 10.7 Pole
(m)	(mm)			(m)	
1.8	610±	83	3.04	9.6±	11.1±
2.4	760±	89		9.8±	11.3±
3.1	990±	98		10.0±	11.5±
3.7	1290±			10.3±	11.9±
4.6	1450±	108		10.4±	12.0±

Pole Type	Load Case	Wind Velocity km/h	POLE DATA: A Height	Min OD Base	Min OD Top	Thickness	Alternative Section B Length	Alternative Section Bottom	Alternative Section Top	BASE PLATE DATA: C	D1	D2	Thickness	Anchor Bolts Size	Anchor Bolts Bolt Circle	Luminaire Arm	Signal Arm	CIDH PILE FOUNDATION Diameter	Depth	Reinforced
			(m)	(mm)			(m)	(mm)		(mm)						(m)		(mm)	(m)	
16-2-129	2	129	5.2	238	173	4.55	None			406	381	0	32	32 øx 1067 x 102	381	None	6.1	1070	1.5	No
17-2-129			9.1	273	168		3.0	203	165					38 ø x 1067 x 152		1.8-4.6 [3.7]		760	2.2	Yes
17A-2-129			10.6		151		4.6		151							1.8-4.6 [4.6]				
18-2-129			5.2		214		None									None	7.62 or 9.14			
19-2-129			9.1		168		3.0	203	165							1.8-4.6 [3.7]				
19A-2-129			10.6		151	6.07	4.6		151	432	419	381		45 ø x 1067 x 152		1.8-4.6 [4.6]				

☐ Indicates arm length to be used unless otherwise noted on plans.

STATE OF CALIFORNIA
DEPARTMENT OF TRANSPORTATION

SIGNAL AND LIGHTING STANDARDS
CASE 2 ARM LOADING
WIND VELOCITY=129 km/h
ARM LENGTHS 6.1 m TO 9.1 m

NO SCALE

ALL DIMENSIONS ARE IN MILLIMETERS UNLESS OTHERWISE SHOWN

ES-6P

STD. PLAN ES-6P

Return to Table of Contents

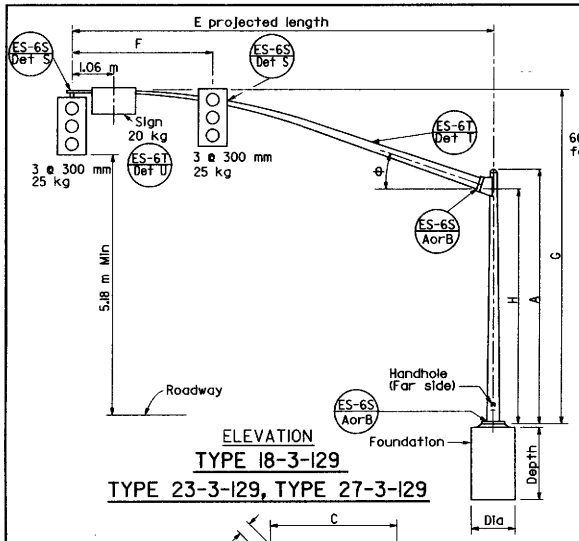

ELEVATION

TYPE 18-3-129

TYPE 23-3-129, TYPE 27-3-129

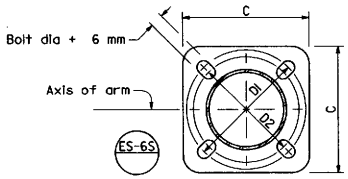

BASE PLATE

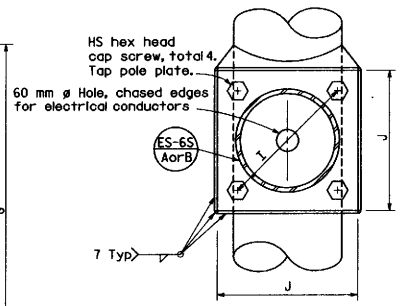

SECTION A-A

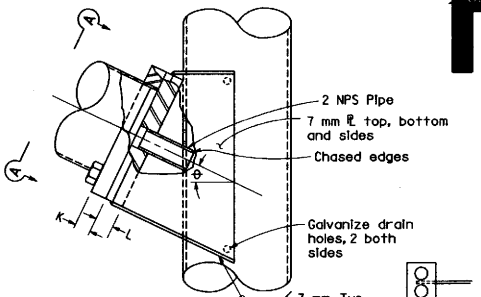

ELEVATION

SIGNAL ARM CONNECTION DETAILS

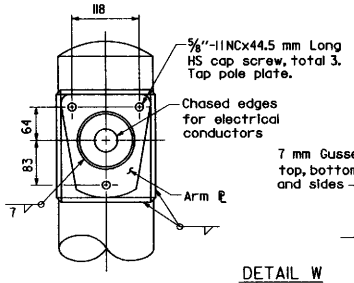

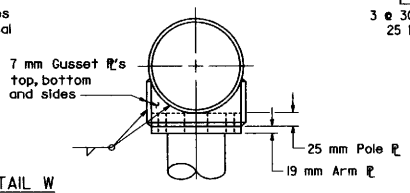

DETAIL W

LUMINAIRE ARM CONNECTION

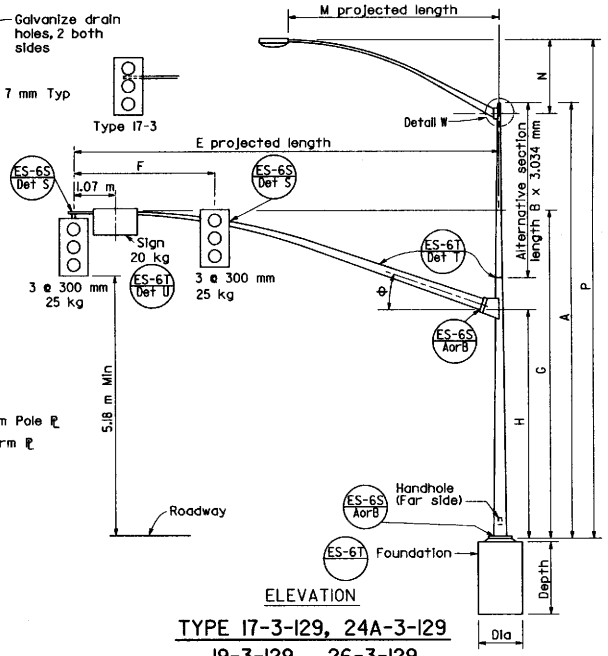

ELEVATION

TYPE 17-3-129, 24A-3-129

19-3-129, 26-3-129

19A-3-129, 26A-3-129, 24-3-129

Minimum yield of sheet steel is 331MPa

SIGNAL ARM DATA											
E Projected Length	F Min. Spacing	G Mounting Height	H	Min OD At Pole	Thickness	I Bolt Circle	HS Cap Screws	J Plate Size	K Arm ℞ Thickness	L Pole ℞ Thickness	ø
(m)				(mm)							
6.1	2.5	6.7±	4.9	168	4.55	279	1"-8NCx64	267	25	32	23°
7.6	3.7	6.9±		186	6.07	305		305	32		
9.2		7.0±		203							
10.7	4.3			222		330	1¼"-7NCx76	330	32	38	21°
12.2	4.6			238	6.07	330		330	38	45	15°
13.7		7.2±		254							

LUMINAIRE ARM DATA						
M Projected Length	N Rise	Min OD at Pole	Thickness	P Mounting Height 9.1 Pole	P Mounting Height 10.7 Pole
(m)	(mm)			(m)	
1.8	610±	83	3.04	9.6±	11.1±
2.4	762±	89		9.8±	11.3±
3.1	991±	98		10.0±	11.5±
3.7	1295±			10.3±	11.8±
4.6	1448±	108		10.4±	12.0±

Pole Type	Load Case	Wind Velocity km/h	POLE DATA: A Height	Min OD Base	Min OD Top	Thickness	Alternative Section B Length	Alternative Section Bottom	Alternative Section Top	BASE PLATE DATA: C	DI	D2	Thickness	Anchor Bolts Size	Anchor Bolts Bolt Circle	Luminaire Arm	Signal Arm	CIDH PILE FOUNDATION Diameter	Depth	Reinforced
			(m)	(mm)			(m)	(mm)		(mm)						(m)		(mm)	(m)	
17-3-129	3	129	9.2	273	168	4.55	3.1	203	203	406	381		32	38øx1067x152	381	1.8-4.6 [3.6]	6.1	760	2.4	Yes
18-3-129			5.2		214	6.07	None			432	419	381		45øx1067x152	419	None	7.6 or [9.1]			
19-3-129			9.2		168		3.1	203	203							1.8-4.6 [3.6]				
19A-3-129			10.7		151		4.6		151							1.8-4.6 [4.6]				
23-3-129			5.2	289	229		None			457	445	406	38		445	None	10.7	920		
24-3-129			9.2		184		3.1	219	184							1.8-4.6 [3.6]				
24A-3-129			10.7		168		4.6		168							1.8-4.6 [4.6]				
26-3-129			9.2	308	203	7.94	3.1	238	203			432		51øx1067x152		1.8-4.6 [3.6]	12.2 or [13.7]			
26A-3-129			10.7		186		4.6		186							1.8-4.6 [4.6]				
27-3-129			5.2		248		None									None				

☐ Indicates arm length to be used unless otherwise noted on plans.

DIST	COUNTY	ROUTE	KILOMETER POST TOTAL PROJECT	SHEET NO.	TOTAL SHEETS

REGISTERED CIVIL ENGINEER

July 1, 1997

PLANS APPROVAL DATE

Jeffrey B. Woody No. C41260 Exp. 3-31-99 CIVIL

The State of California or its officers or agents shall not be responsible for the accuracy or completeness of electronic copies of this plan sheet.

STATE OF CALIFORNIA
DEPARTMENT OF TRANSPORTATION

SIGNAL AND LIGHTING STANDARDS
CASE 3 ARM LOADING
WIND VELOCITY=129 km/h
ARM LENGTHS 6.1 m TO 13.7 m

NO SCALE

ALL DIMENSIONS ARE IN MILLIMETERS UNLESS OTHERWISE SHOWN

ES-6Q

STD. PLAN ES-6Q

Return to Table of Contents

DIST	COUNTY	ROUTE	KILOMETER POST TOTAL PROJECT	SHEET NO.	TOTAL SHEETS

Caltrans Metric

REGISTERED CIVIL ENGINEER

July 1, 1997
PLANS APPROVAL DATE

REGISTERED PROFESSIONAL ENGINEER Jeffrey B. Woody NO. C41260 Exp. 3-31-99 CIVIL STATE OF CALIFORNIA

The State of California or its officers or agents shall not be responsible for the accuracy or completeness of electronic copies of this plan sheet.

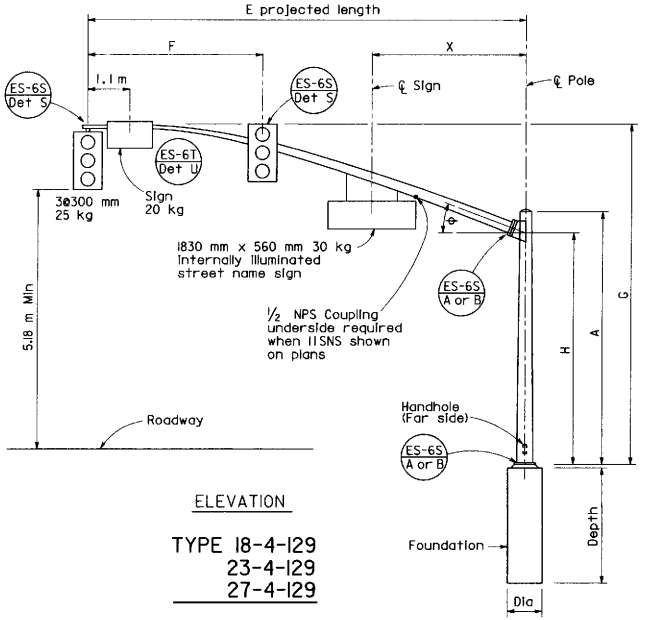

ELEVATION

TYPE 18-4-129
23-4-129
27-4-129

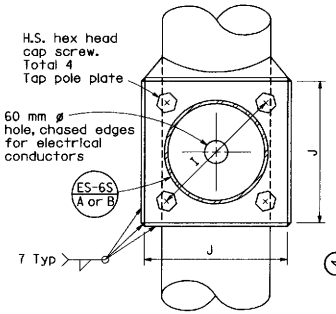

SECTION A-A

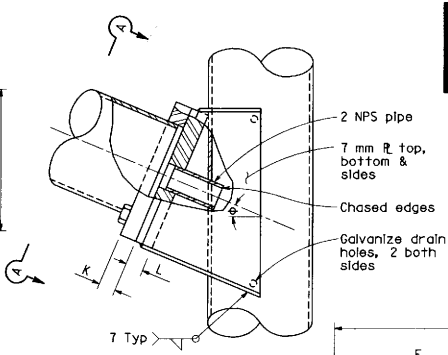

ELEVATION

SIGNAL ARM CONNECTION DETAILS

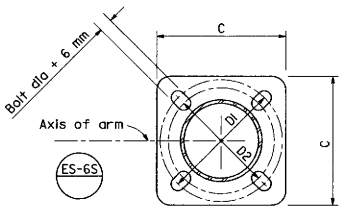

BASE PLATE

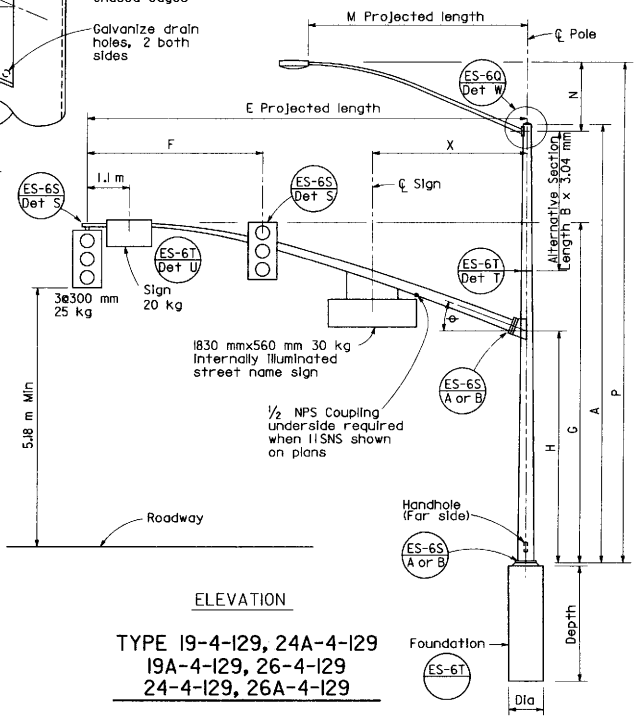

ELEVATION

TYPE 19-4-129, 24A-4-129
19A-4-129, 26-4-129
24-4-129, 26A-4-129

SIGNAL ARM DATA												
E Projected Length	F Min. Spacing	G Mounting Height	H	Min OD At Pole	Thickness	I Bolt Circle	HS Cap Screws	J Plate Size	K Arm ℞ Thickness	L Pole ℞ Thickness	ø	X Max
(m)				(mm)								(m)
7.6	3.1	6.9±	4.88	186	6.07	305	1¼"-7NCx76	305	32	38	23°	3.2
9.1	3.7	7.01±		203								
10.7	4.3			221		300		300			21°	
12.2	4.6			238	6.07	330		330	44	44	15°	4.0
13.7		7.2±		256								

LUMINAIRE ARM DATA					
M Projected Length	N Rise	Min OD at Pole	Thickness	P Mounting Height 9.1 Pole	P Mounting Height 10.7 Pole
(m)	(mm)			(m)	
1.8	610±	83	3.04	9.6±	11.1±
2.4	760±	89		9.8±	11.3±
3.1	990±	98		10.0±	11.5±
3.7	1290±			10.3±	11.8±
4.6	1450±	108		10.5±	12.0±

Pole Type	Load Case	Wind Velocity km/h	POLE DATA: A Height	Min OD Base	Min OD Top	Thickness	Alternative Section B Length	Alternative Section Bottom	Alternative Section Top	BASE PLATE DATA: C	D1	D2	Thickness	Anchor Bolts Size	Anchor Bolts Bolt Circle	Luminaire Arm	Signal Arm	CIDH PILE FOUNDATION Diameter	Depth	Reinforced
			(m)	(mm)			(m)	(mm)		(mm)						(m)		(mm)	(m)	
18-4-129	4	129	5.2	273	214		None									None		760		
19-4-129			9.1	289	186		3.1	221	186	432	419	381	32	45 ø x 1067 x 152	419	1.8-4.6 [3.7]	7.6 or [9.1]	920	2.40	Yes (ES-6T)
19A-4-129			10.7		168		4.6		168							1.8-4.6 [4.6]				
23-4-129			5.2		229		None								445	None				
24-4-129			9.1	305	203		3.1		203			406				1.8-4.6 [3.7]	10.7			
24A-4-129			10.7		186		4.6	238	186	457	445		38			1.8-4.6 [4.6]				
26-4-129			9.1		203		3.1		203							1.8-4.6 [3.7]				
26A-4-129			10.7	308	186		4.6		186			432		51ø x 1067 x 152		1.8-4.6 [4.6]	12.2 or [13.7]	920	2.7	
27-4-129			5.2		250		None									None				

☐ Indicates arm length to be used unless otherwise noted on plans.

Minimum yield of sheet steel is 331 MPa.

STATE OF CALIFORNIA
DEPARTMENT OF TRANSPORTATION

SIGNAL AND LIGHTING STANDARDS
CASE 4 ARM LOADING
WIND VELOCITY=129 km/h
ARM LENGTHS 7.6 m TO 13.7 m

NO SCALE

ALL DIMENSIONS ARE IN MILLIMETERS UNLESS OTHERWISE SHOWN

ES-6R

STD. PLAN ES-6R

Return to Table of Contents

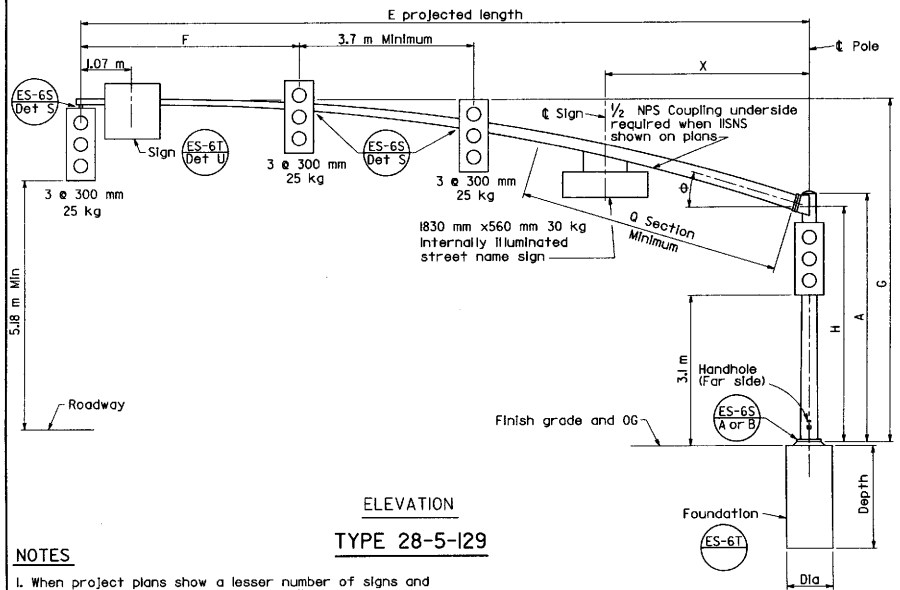

ELEVATION

TYPE 28-5-129

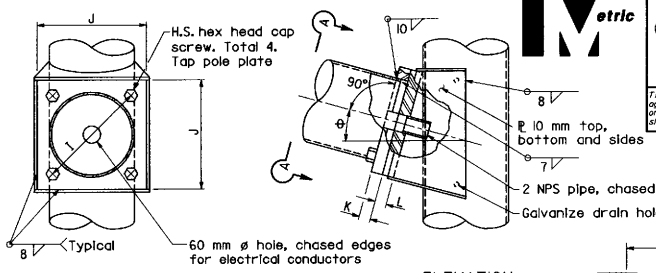

SECTION A-A

ELEVATION

SIGNAL ARM CONNECTION DETAILS

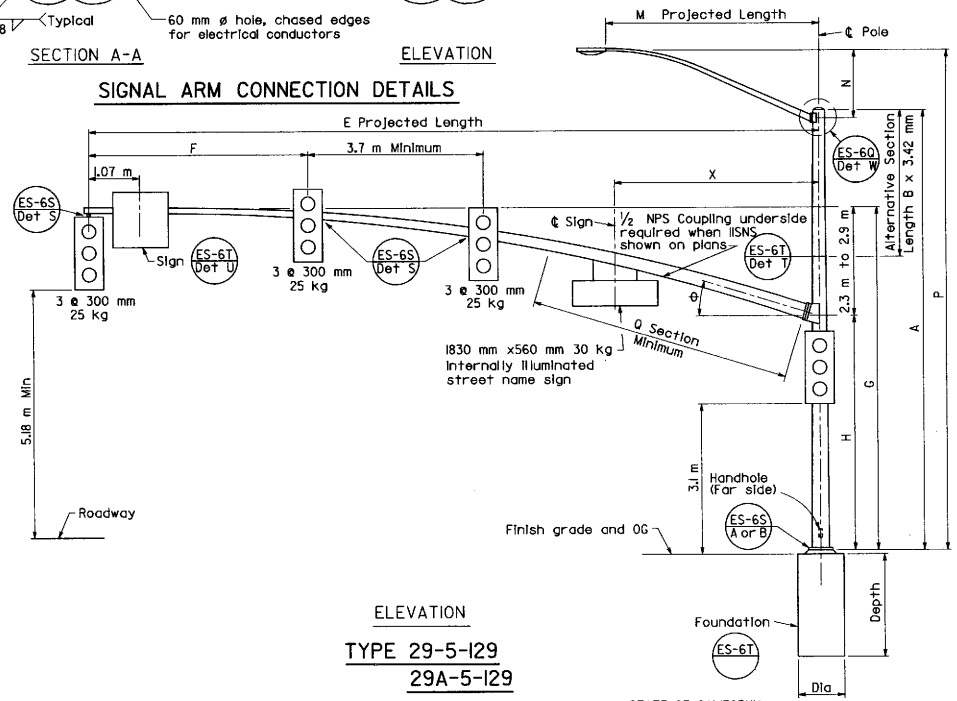

ELEVATION

TYPE 29-5-129

29A-5-129

NOTES

1. When project plans show a lesser number of signs and signals, the project plans shall prevail.
2. For details not shown see Standard Plans and Electrical Details.
3. Minimum yield of sheet steel is 331MPa.

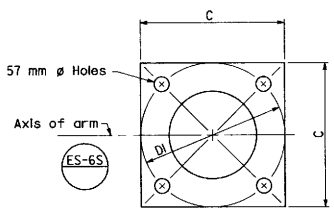

BASE PLATE

LUMINAIRE ARM DATA					
M Projected Length	N Rise	Min OD at Pole	Thickness	P Mounting Height 9.1 Pole	P Mounting Height 10.7 Pole
(m)	(mm)			(m)	
1.8	610±	83	3.04	9.6±	11.1±
2.4	760±	89		9.8±	11.3±
3.1	990±	98		10.0±	11.5±
3.7	1290±			10.3±	11.8±
* 4.6	1450±	108		10.5±	12.0±

*Indicated use 4.6 m projected length unless shown otherwise

SIGNAL ARM DATA														
E Projected Length	F Min. Spacing	G Mounting Height	H	Min OD At Pole	Thickness	I Bolt Circle	HS Cap Screws	J Plate Size	K Arm ℄ Thickness	L Pole ℄ Thickness	ø	Q SECTION Length	Q SECTION Thickness	X Max
(m)				(mm)								(m)	(mm)	(m)
15.2	4.6	7.1	4.9	291	4.6	400	38-6NC-82.6	381	45	45	15°	5.5	6.1	4.3
16.8				305								7.0		

Pole Type	Load Case	Wind Velocity km/h	POLE DATA A Height	Min OD Base	Min OD Top	Thickness	Alternative Section B Length	Alternative Section Bottom	Alternative Section Top	BASE PLATE DATA C	D1	D2	Thickness	Anchor Bolts Size	Anchor Bolts Bolt Circle	Luminaire Arm	Signal Arm	CIDH PILE FOUNDATION Diameter	Depth	Reinforced
			(m)	(mm)			(m)	(mm)		(mm)						(m)		(mm)	(m)	
28-5-129	5	129	5.18	356	297	7.94	None	0	0	533	533		45	51ø x 1067 x 152	533	None	15.24 or 16.76	920	2.8	Yes
29-5-129			9.14		251		3.05	286	251							1.83-4.57				
29A-5-129			10.67		233		4.57		233	559	559				559		15.24			

☐ Indicates arm length to be used unless otherwise noted on plans.

Caltrans Metric

DIST	COUNTY	ROUTE	KILOMETER POST TOTAL PROJECT	SHEET NO.	TOTAL SHEETS

REGISTERED CIVIL ENGINEER

July 1, 1997
PLANS APPROVAL DATE

REGISTERED PROFESSIONAL ENGINEER Jeffrey B. Woody No. C41260 Exp. 3-31-99 CIVIL STATE OF CALIFORNIA

The State of California or its officers or agents shall not be responsible for the accuracy or completeness of electronic copies of this plan sheet.

STATE OF CALIFORNIA
DEPARTMENT OF TRANSPORTATION

SIGNAL AND LIGHTING STANDARDS
CASE 5 ARM LOADING
WIND VELOCITY=129 km/h
ARM LENGTHS 15.2 m TO 16.8 m

NO SCALE

ALL DIMENSIONS ARE IN MILLIMETERS UNLESS OTHERWISE SHOWN

ES-6RA

STD. PLAN ES-6RA

Return to Table of Contents

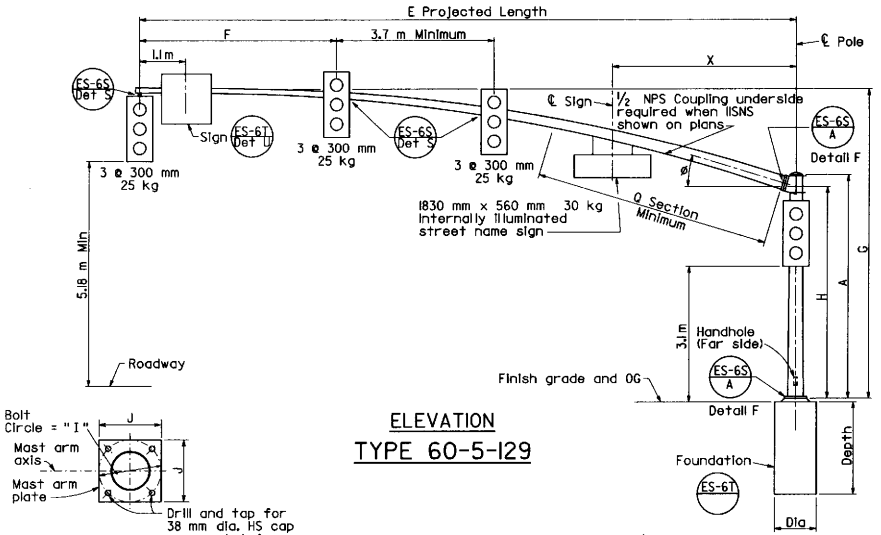

ELEVATION
TYPE 60-5-129

MAST ARM PLATE

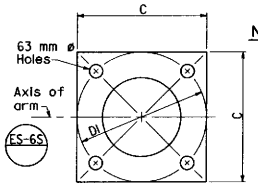

BASE PLATE

LUMINAIRE ARM DATA					
M Projected Length	N Rise	Min OD at Pole	Thickness	P Mounting Height 9.1 Pole	P Mounting Height 10.7 Pole
(m)	(mm)			(m)	
1.8	610±	83	3.04	9.6±	11.1±
2.4	760±	89		9.8±	11.3±
3.1	990±	98		10.0±	11.5±
3.7	1290±			10.3±	11.8±
* 4.6	1450±	104		10.5±	12.0±

*Indicated use 4.6 m projected length unless shown otherwise

NOTES
1. When project plans show a lesser lesser number of signs and signals, the project plans shall prevail.
2. For details not shown, see Standard Plans and Electrical Details.

DESIGN
AASHTO Standard Specifications for structural supports for Highway Signs, Luminaires and Traffic Signals 1994.
Design Fy: 331 MPa max. for sheet steel.
Wind velocity: 129 km/h ISOTACH

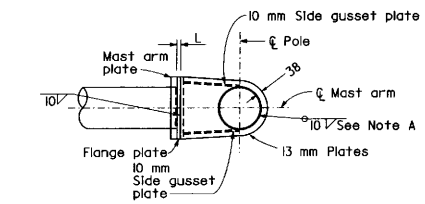

PLAN

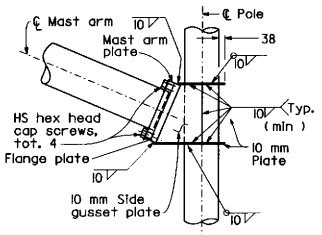

ELEVATION

SINGLE ARM CONNECTION DETAIL

Note A: The radial separation between the face of the pole and the adjacent inside of the top and bottom gusset plates shall not exceed 5 mm. Fillet weld size to be increased by amount of gap.

SIGNAL ARM DATA															
E Projected Length	F Min. Spacing	G Mounting Height	H	Min OD At Pole	Thickness	I Bolt Circle	HS Cap Screws	J Plate Size	K Arm ℄ Thickness	L Pole ℄ Thickness	ø	Q SECTION Length	Q SECTION Thickness	X Max
(m)				(mm)								(m)	(mm)	(m)
18.2	4.6	7.1	4.9	343	4.6	508	38-6NC-102	508	51	51	15°	7.3	6.1	4.3
19.8				343	6.1							8.8	7.9	

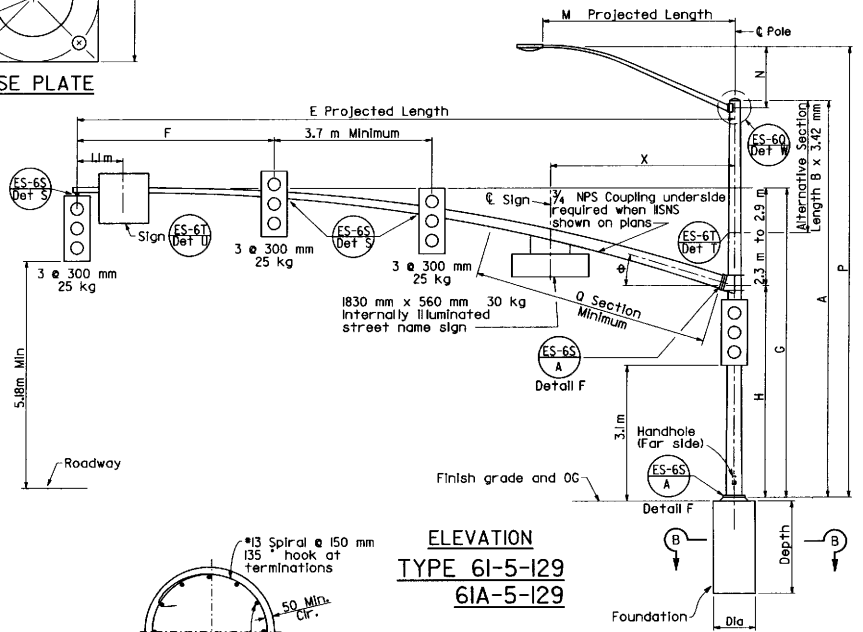

ELEVATION
TYPE 61-5-129
61A-5-129

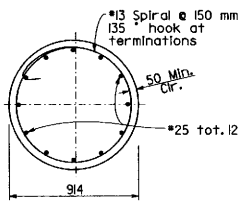

SECTION B-B

POLE DATA						BASE PLATE DATA							CIDH PILE FOUNDATION		
Pole Type	Load Case	Wind Velocity km/h	A Height	Min OD Base	Min OD Top	Thickness	C	DI	Thickness	Anchor Bolts Size	Anchor Bolts Bolt Circle	Luminaire Arm	Signal Arm	Diameter	Depth	Reinforced
			(m)	(mm)			(mm)					(m)		(mm)	(m)	
60-5-129	5	129	5.18	406	347	7.9	584	584	51	57 ø x 1524 x 152	584	1.83-[4.57]	18.28 or 19.81	914	4.87	Yes
61-5-129			9.14		301											
61A-5-129			10.67		282								1981			

☐ Indicates arm length to be used unless otherwise noted on plans.

STATE OF CALIFORNIA
DEPARTMENT OF TRANSPORTATION

SIGNAL AND LIGHTING STANDARDS
CASE 5 ARM LOADING
WIND VELOCITY=129 km/h
ARM LENGTHS 18.2 m TO 19.8 m

NO SCALE

ALL DIMENSIONS ARE IN MILLIMETERS UNLESS OTHERWISE SHOWN

ES-6RB

STD. PLAN ES-6RB

DIST	COUNTY	ROUTE	KILOMETER POST TOTAL PROJECT	SHEET NO.	TOTAL SHEETS

REGISTERED CIVIL ENGINEER
July 1, 1997
PLANS APPROVAL DATE
Jeffrey B. Woody No. C41260 Exp. 3-31-99 CIVIL STATE OF CALIFORNIA
The State of California or its officers or agents shall not be responsible for the accuracy or completeness of electronic copies of this plan sheet.

Return to Table of Contents

DIST	COUNTY	ROUTE	KILOMETER POST TOTAL PROJECT	SHEET NO.	TOTAL SHEETS

REGISTERED CIVIL ENGINEER

July 1, 1997
PLANS APPROVAL DATE

The State of California or its officers or agents shall not be responsible for the accuracy or completeness of electronic copies of this plan sheet.

REGISTERED PROFESSIONAL ENGINEER Jeffrey B. Woody No. C41260 Exp. 3-31-99 CIVIL STATE OF CALIFORNIA

Caltrans Metric

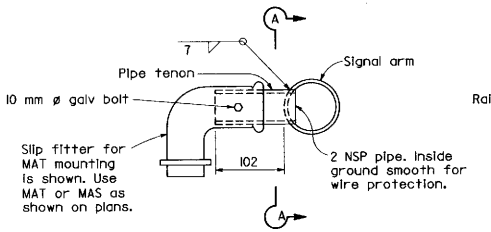

DETAIL S-SIDE TENON

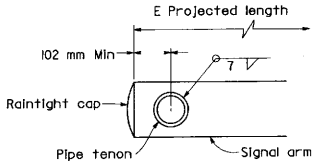

SECTION A-A

PIPE TENONS

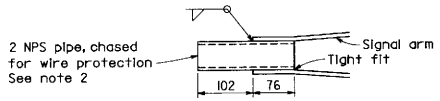

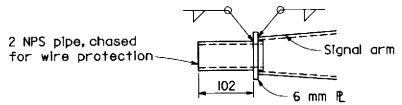

DETAIL TL-TIP TENON

This detail supersedes Detail S when so designated

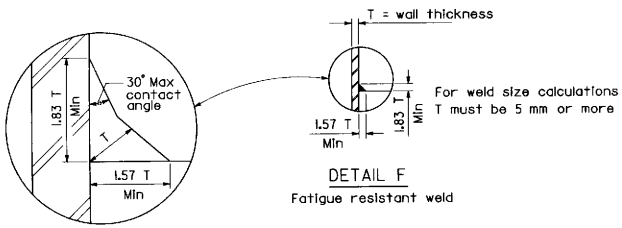

DETAIL F

Fatigue resistant weld

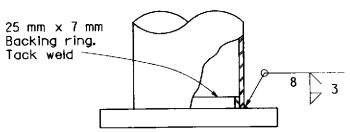

This detail shall be used for 2 ply poles

ELEVATION B

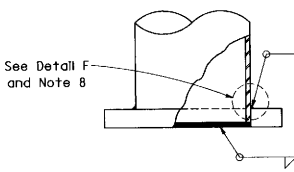

Weld Size	Wall Thickness
7	3.04
8	4.55
10	6.07
11	8
4	3.04
5	4.55
7	6.07
8	8

ELEVATION A

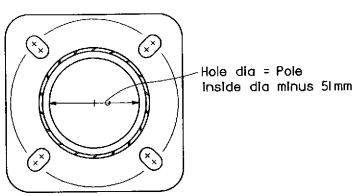

PLAN

DETAIL B

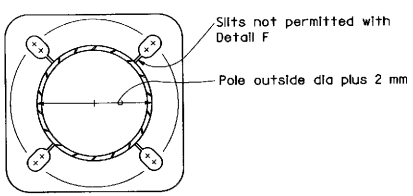

PLAN

DETAIL A

ALTERNATIVE BASE PLATE DETAILS

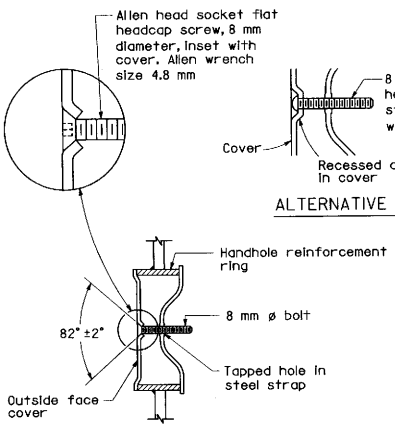

ALTERNATIVE DETAIL

TAMPER RESISTANT HANDHOLE COVER

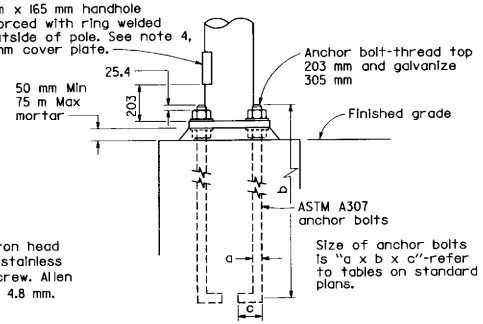

HANDHOLE AND ANCHORAGE DETAILS

IDENTIFICATION NUMBER

Attach a stamped metal tag with each pole's identification number to shaft above handhole. 7 mm high number minimum. A similar tag shall be attached to the top of the signal mast arm near the pole plate.

Sample Identification Number

Type, Load case, Design wind velocity, Signal arm length maximum, Standard plan year, Only for poles with fatigue resistant welds

19A - 3 - 113 - 9.1 - 95 - F

Use SL for special load case

NOTES

1. 4-ASTM A-307 anchor bolts are required for each pole. Provide a hex nut, leveling nut and 2 washers for each bolt.
2. Luminare arms shall be round, tapered steel tubes, taper of 11.45 mm/m to 11.66 mm/m with an end section 60 mm OD for mounting hardware. Extensions of 2 NPS pipe ± 180 mm long may be used at the option of the manufacturer, when low pressure sodium luminaires are specified. The extention shall be 381 mm.
3. Signal arms shall be round, tapered steel tubes, maximum taper 11.66 mm/m.
4. Handhole reinforcement ring to be 6 mm x 51 mm for 3.04 mm to 6.07 mm poles, 10 mm x 51mm for 7.94 mm.
5. In lieu of the torque requirements for HS bolts, cap screws shall be tightened by turn-of-nut method 1/3 turn from a snug tight condition. No washer will be required.
6. Camber pole shafts only when specified.
7. Detail A base plate welding details may be used to weld signal arm to signal arm plate if the connection is normal. This does not include a skewed connection such as the luminaire arm connection.
8. Detail A with fatigue resistant weld, Detail F, is required only for 331 MPa minimum yield.
9. Sheet steel shall have a minimum yield of 276 MPa unless designated otherwise. See plans.
10. Handholes for lighting standards shall be located on the downstream side of the pole unless otherwise noted on the plans.
11. One 15 mm diameter hole may be drilled in mast arm to install pre-emption detector.

STATE OF CALIFORNIA
DEPARTMENT OF TRANSPORTATION

SIGNAL AND LIGHTING STANDARDS DETAILS NO. 1

NO SCALE

ALL DIMENSIONS ARE IN MILLIMETERS UNLESS OTHERWISE SHOWN

ES-6S

STD. PLAN ES-6S

Return to Table of Contents

DIST	COUNTY	ROUTE	KILOMETER POST TOTAL PROJECT	SHEET NO.	TOTAL SHEETS

REGISTERED CIVIL ENGINEER

July 1, 1997
PLANS APPROVAL DATE

REGISTERED PROFESSIONAL ENGINEER Jeffrey B. Woody No. C41260 Exp. 3-31-99 CIVIL STATE OF CALIFORNIA

The State of California or its officers or agents shall not be responsible for the accuracy or completeness of electronic copies of this plan sheet.

Caltrans Metric

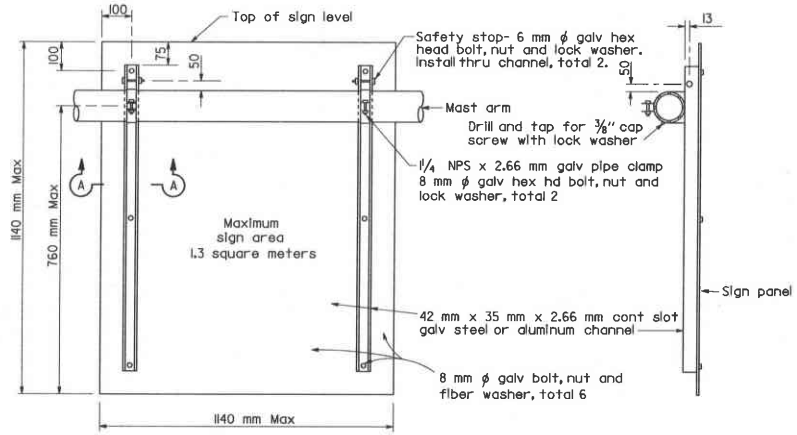

REAR VIEW

SIDE VIEW

DETAIL U

SIGN MOUNTING DETAILS

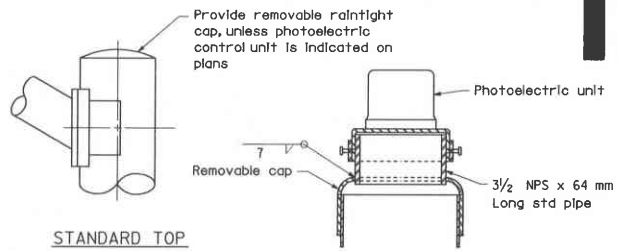

STANDARD TOP

MOUNTING ADAPTER FOR PHOTOELECTRIC UNIT

POLE TOP DETAILS

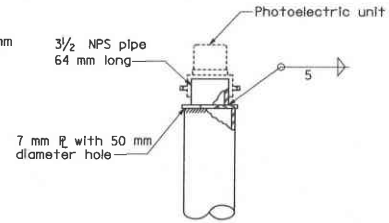

ALTERNATIVE MOUNTING ADAPTER

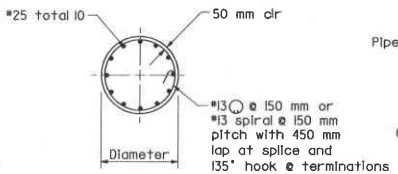

SECTION B-B

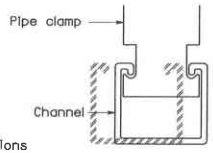

SECTION A-A

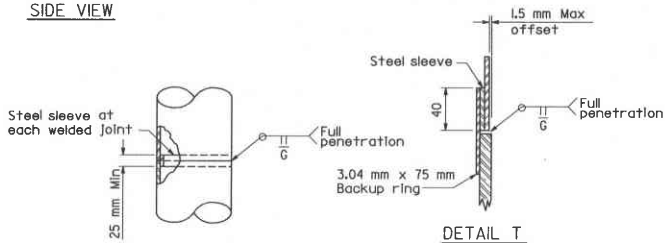

FOR UNIFORM TUBE THICKNESS

DETAIL T
AT TUBE THICKNESS CHANGE

POLE SPLICES

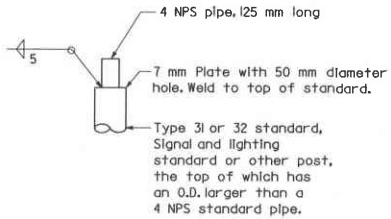

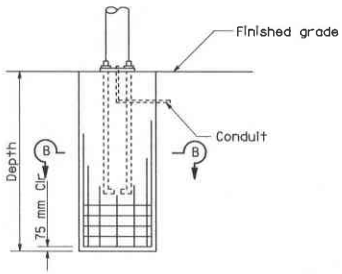

ELEVATION
REINFORCED PILE

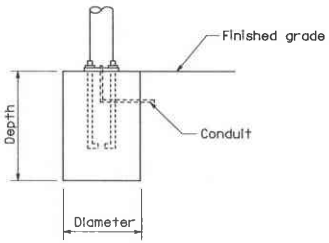

ELEVATION
NON-REINFORCED PILE

CAST-IN-DRILLED HOLE PILE FOUNDATION

Poles to be installed on existing foundations

Bolt circles and anchor bolt sizes have been revised. The contractor shall verify dependent dimensions before fabricating poles to be installed on existing foundations.

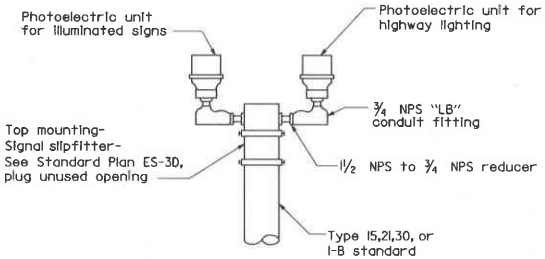

DUAL PE CONTROL MOUNTING DETAIL

STATE OF CALIFORNIA
DEPARTMENT OF TRANSPORTATION

SIGNAL AND LIGHTING STANDARDS DETAILS NO. 2

NO SCALE

ALL DIMENSIONS ARE IN MILLIMETERS UNLESS OTHERWISE SHOWN

ES-6T

STD. PLAN ES-6T

Return to Table of Contents

DIST	COUNTY	ROUTE	KILOMETER POST TOTAL PROJECT	SHEET NO.	TOTAL SHEETS

Caltrans Metric

REGISTERED CIVIL ENGINEER

July 1, 1997
PLANS APPROVAL DATE

REGISTERED PROFESSIONAL ENGINEER Jeffrey B. Moody No. C41260 Exp. 3-31-99 CIVIL STATE OF CALIFORNIA

The State of California or its officers or agents shall not be responsible for the accuracy or completeness of electronic copies of this plan sheet.

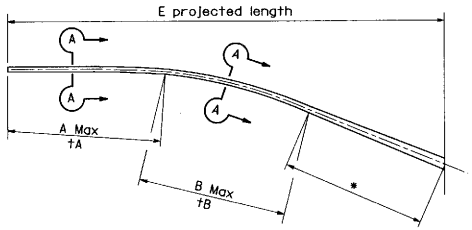

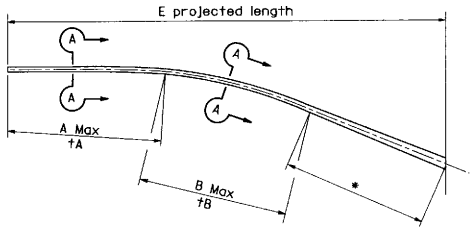

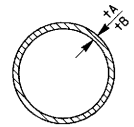

SECTION A-A

Case	E Projected Length (m)	A Max (m)	B Max (m)	tA mm	tB mm
1	7.6	*		*	
1	9.1	*		*	
2	6.1	3.0	*	3.04	*
2	7.6	3.0	*	3.04	*
2	9.1	3.0	*	3.04	*
3	6.1	3.0	*	3.04	*
3	7.6	3.0	3.1	3.04	4.55
3	9.1	3.0	3.1	3.04	4.55
3	10.7	3.0	3.1	3.04	4.55
3	12.2	3.0	3.1	3.04	4.55
3	13.7	3.0	3.1	3.04	4.55
4	7.6	3.0	3.1	3.04	4.55
4	9.1	3.0	3.1	3.04	4.55
4	10.7	3.0	3.1	3.04	4.55
4	12.2	3.0	3.1	3.04	4.55
4	13.7	3.0	3.1	3.04	4.55
5	15.2	3.0	*	3.04	*
5	15.8	3.0	*	3.04	*

ALTERNATIVE MAST ARMS
WIND VELOCITY = 129 km/h

Case	E Projected Length (m)	A Max (m)	B Max (m)	tA mm	tB mm
1	4.6	*		*	
1	5.5	*		*	
1	6.1	*		*	
1	7.6	*		*	
1	9.1	*		*	
2	6.1	*		*	
2	7.6	*		*	
2	9.1	*		*	
3	4.6	*		*	
3	6.1	3.0	*	3.04	*
3	7.6	3.0	*	3.04	*
3	9.1	3.0	*	3.04	*
3	10.7	3.0	*	3.04	*
3	12.2	3.0	3.1	3.04	4.55
3	13.7	3.0	3.1	3.04	4.55
4	7.6	3.0	*	3.04	*
4	9.1	3.0	*	3.04	*
4	10.7	3.0	*	3.04	*
4	12.2	3.0	3.1	3.04	4.55
4	13.7	3.0	3.1	3.04	4.55
5	15.2	3.0	*	3.04	*
5	16.8	3.0	*	3.04	*

ALTERNATIVE MAST ARMS
WIND VELOCITY = 113 km/h

Standard Description Type - Case - Wind - Arm (m)	Pole Data Min OD		Pole Thickness (mm)
	Base (mm)	Top (mm)	
17A - 1 - 113 - 6.1	228.6	104	4.55
18 - 1 - 113 - 9.1	228.6	168	4.55
17 - 2 - 113 - 6.1	228.6	120	4.55
18 - 1 - 129 - 9.1	228.6	168	4.55
16 - 2 - 129 - 6.1	228.6	168	4.55
19 - 3 - 113 - 9.1	279.4	171	4.55
19A - 2 - 129 - 9.1	279.4	155	4.55
19A - 3 - 129 - 9.1	279.4	155	4.55
23 - 4 - 113 - 10.7	304.8	244	4.55

ALTERNATIVE POLES

NOTES

1. For details not shown, see Standard Plans, "Signal and Lighting Standards".
2. tA and tB indicates wall thickness of section in mast arms.
3. * indicates standard details, see Standard Plans, "Signal and Lighting Standards".
4. Alternative poles may be used with or without alternative mast arms.

STATE OF CALIFORNIA
DEPARTMENT OF TRANSPORTATION

SIGNAL AND LIGHTING STANDARDS POLE AND MAST ARM ALTERNATIVES

NO SCALE

ALL DIMENSIONS ARE IN MILLIMETERS UNLESS OTHERWISE SHOWN

ES-6TA

STD. PLAN ES-6TA

Return to Table of Contents

DIST	COUNTY	ROUTE	KILOMETER POST TOTAL PROJECT	SHEET NO.	TOTAL SHEETS

REGISTERED CIVIL ENGINEER

July 1, 1997
PLANS APPROVAL DATE

REGISTERED PROFESSIONAL ENGINEER Jeffrey B. Woody No. C41260 Exp. 3-31-99 CIVIL STATE OF CALIFORNIA

The State of California or its officers or agents shall not be responsible for the accuracy or completeness of electronic copies of this plan sheet.

Metric

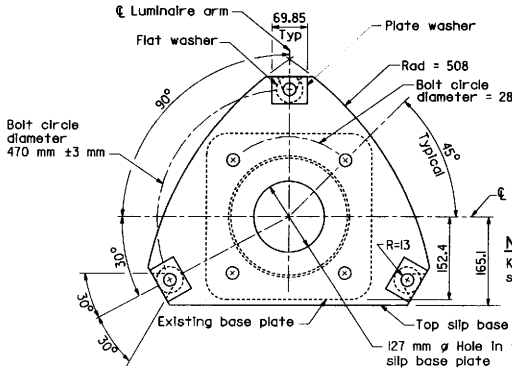

PLAN-TOP PLATES

NOTE

Keeper plate not shown see "Detail D"

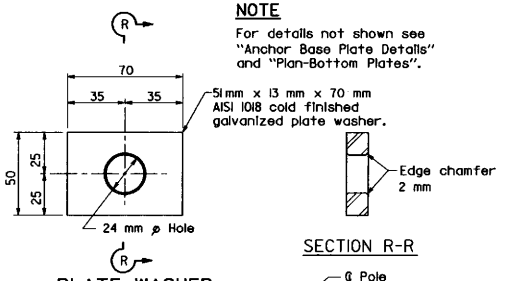

PLATE WASHER

SECTION R-R

NOTE

For details not shown see "Anchor Base Plate Details" and "Plan-Bottom Plates".

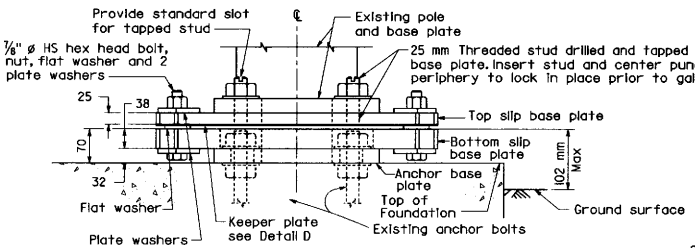

ELEVATION

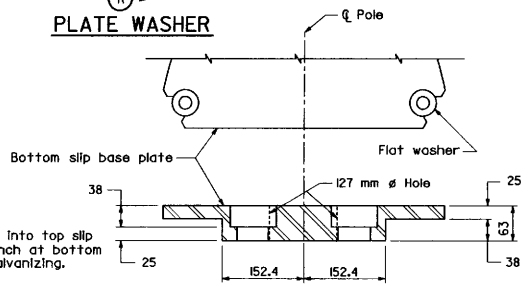

SECTION C-C

CAST OPTION

NOTES

1. Conduit riser (including bushing) shall protrude no more than 50.8 mm above top of foundation.
2. When existing anchor bolts are 7/8"ø, provide 2 hardened washers of 57 mm ø at each slot hole. Place on each side of anchor base plate.
3. Nuts on 7/8"ø HS clamping bolts shall be lubricated and torqued as per specifications.
4. Torque requirements for nuts attaching anchor base plate to existing anchor bolts are waived. Wrench tighten.

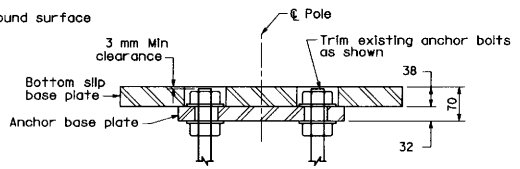

SECTION C-C

WELDED OPTION

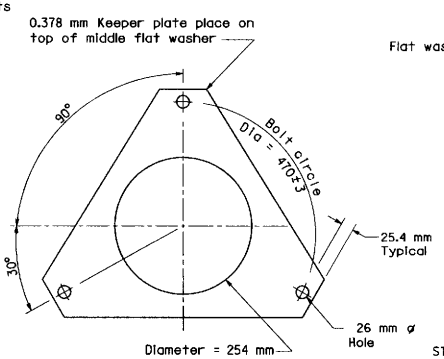

DETAIL D

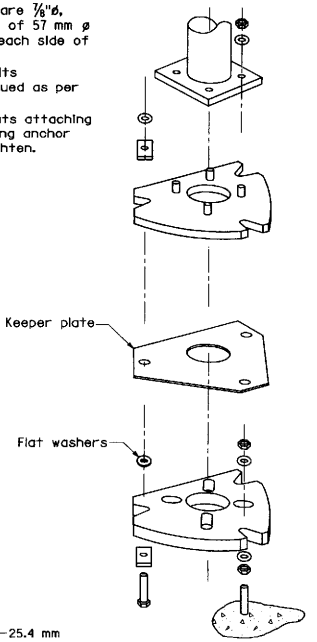

SLIP BASE INSERT DETAIL

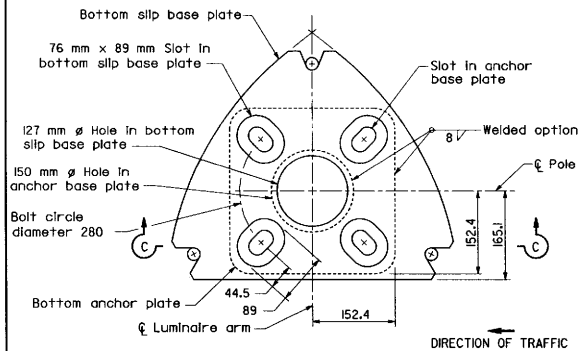

PLAN-BOTTOM PLATES

SLIP BASE PLATE INSERT DETAILS

NOTE

For plate dimensions see "Plan-Top Plates".

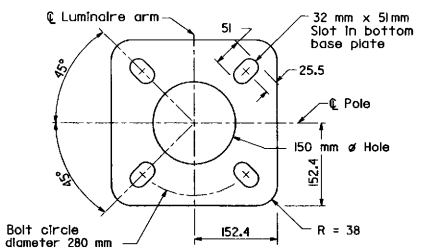

PLAN

ANCHOR BASE PLATE DETAILS

STATE OF CALIFORNIA
DEPARTMENT OF TRANSPORTATION

LIGHTING STANDARDS
TYPE 15
SLIP BASE INSERT

NO SCALE

ALL DIMENSIONS ARE IN MILLIMETERS UNLESS OTHERWISE SHOWN

ES-6U

Return to Table of Contents

DIST	COUNTY	ROUTE	KILOMETER POST TOTAL PROJECT	SHEET NO.	TOTAL SHEETS

California Metric

REGISTERED CIVIL ENGINEER

July 1, 1997
PLANS APPROVAL DATE

REGISTERED PROFESSIONAL ENGINEER Jeffrey B. Woody No. C41260 Exp. 3-31-99 CIVIL STATE OF CALIFORNIA

The State of California or its officers or agents shall not be responsible for the accuracy or completeness of electronic copies of this plan sheet.

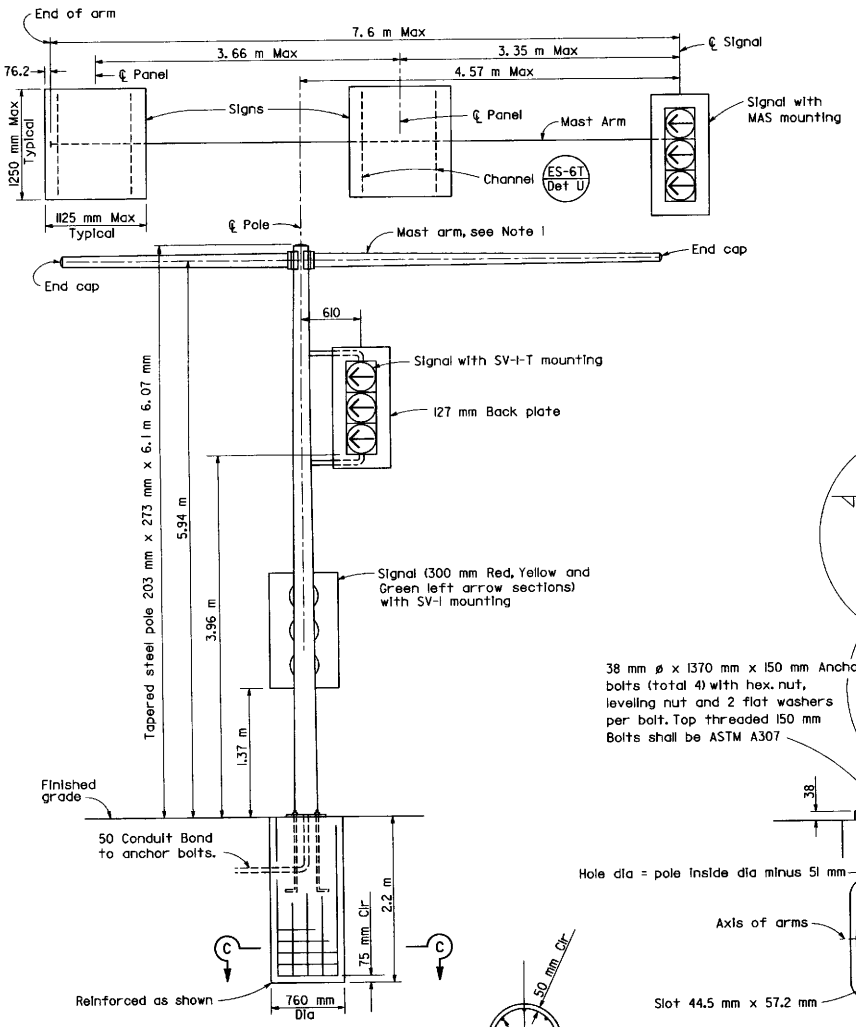

ELEVATION

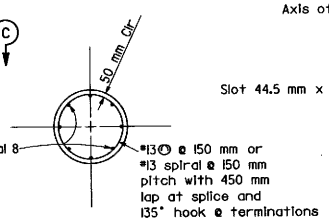

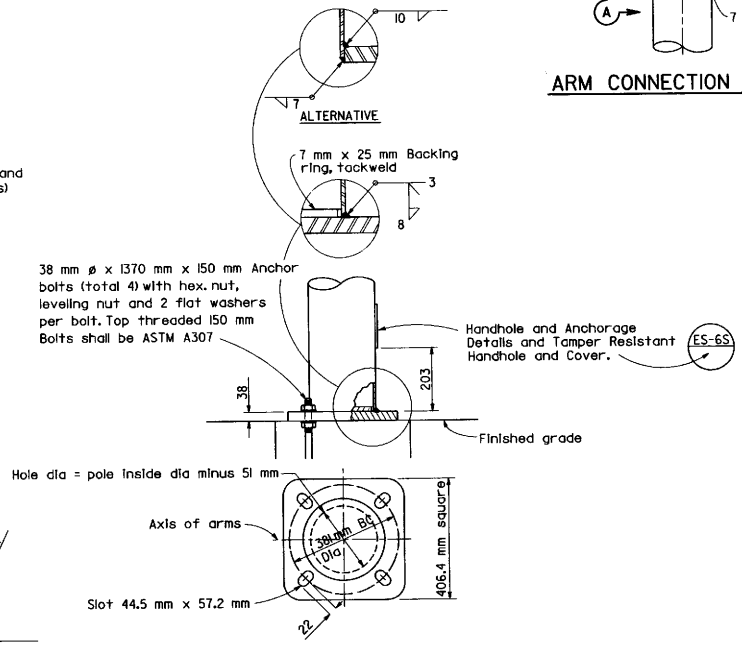

BASE PLATE

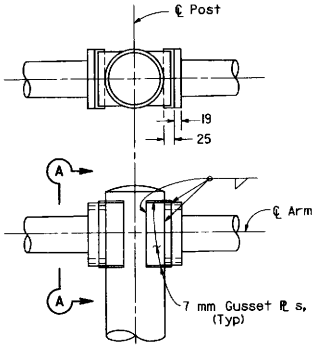

ARM CONNECTION DETAILS

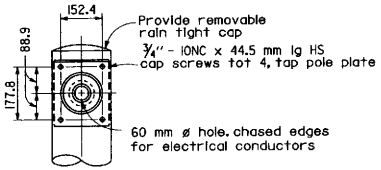

SECTION A-A

NOTES

1. Round tapered steel tube 4.55 mm with maximum taper of 11.67 mm/m and 140 mm OD minimum at pole.
2. In lieu of the torque requirments for HS bolts, cap screws shall be tightened by the turn-of-nut method, 1/3 turn from snug tight condition. No washer will be required.
3. For arm lengths and signs or signals required each side of ℄ pole, see Signal plans.
4. Mast arm signal to be MAS mounted on pipe tenon Detail S on Standard Plan ES-6S.
5. Sign area shall not exceed 1.36 square meters for each sign.
6. If all 3 signs are placed on one side of pole one sign must be placed adjacent to pole.

STATE OF CALIFORNIA
DEPARTMENT OF TRANSPORTATION

SIGNAL AND SIGN STANDARDS
TYPE 33
LEFT TURN

NO SCALE

ALL DIMENSIONS ARE IN MILLIMETERS UNLESS OTHERWISE SHOWN

ES-6V

STD. PLAN ES-6V

Return to Table of Contents

DIST	COUNTY	ROUTE	KILOMETER POST TOTAL PROJECT	SHEET NO.	TOTAL SHEETS

Les Kubel
REGISTERED ELECTRICAL ENGINEER

July 1, 1997
PLANS APPROVAL DATE

Les Kubel
No. E6503
Exp. 9-30-98
ELECTRICAL
REGISTERED PROFESSIONAL ENGINEER
STATE OF CALIFORNIA

The State of California or its officers or agents shall not be responsible for the accuracy or completeness of electronic copies of this plan sheet.

Metric

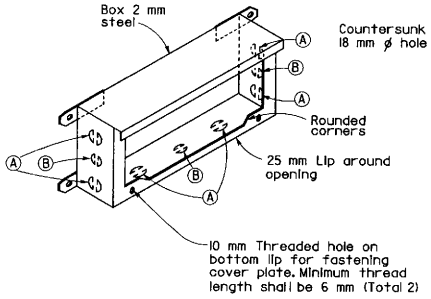

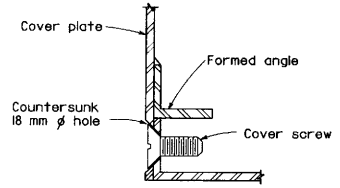

DETAIL J

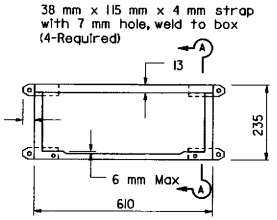

PLAN

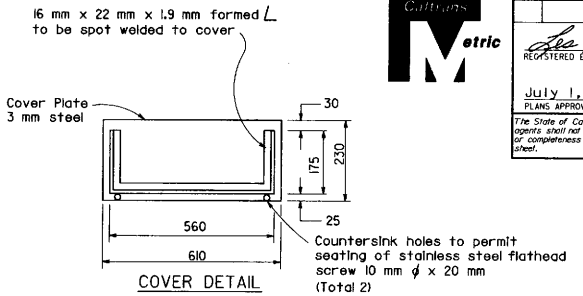

COVER DETAIL

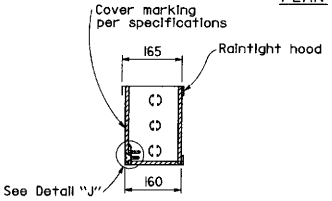

SECTION A-A

INSTALLATION NOTES:

Box axis shall be parallel to top of railing. Close box during pouring with 6 mm plywood of sufficient size to provide 1:1 chamfer on 3 sides of cover. Upper edge of plywood shall fit against lower edge of raintight hood.

No. 9 STRUCTURE PULL BOX

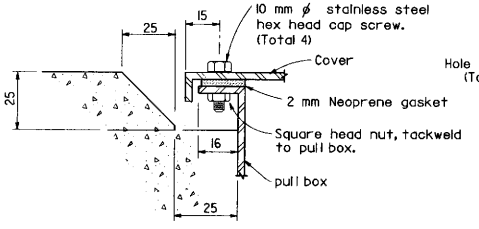

SECTION C-C

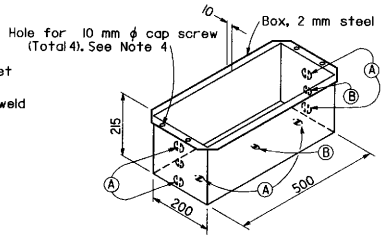

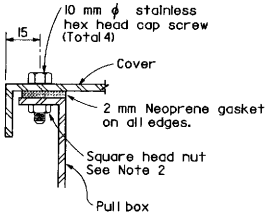

DETAIL A

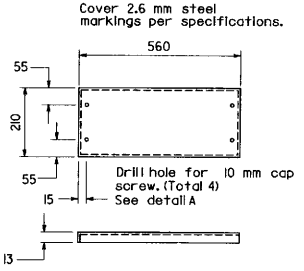

COVER DETAIL

NOTES: NO. 9 AND 9A PULL BOX

1. All corner joints to be lapped and secured by spot welding or riveting.
2. Where cap screws are used to attach cover to box, either of the following methods of providing adequate threading may be used:
   a. Tack weld square nut to bottom of flange (total 4), or
   b. Tack weld a 6 mm x 16 mm x 200 mm bar beneath flange (total 2).
3. Pound knockouts flat after punching.
4. Multiple size knockouts will not be permitted.
5. Pull box covers shall be marked as shown on Standard Plan ES-8.

No. 9A STRUCTURE PULL BOX

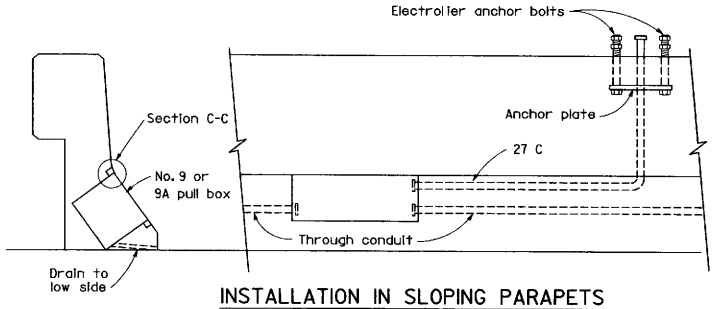

INSTALLATION IN SLOPING PARAPETS

For reinforcement in area of electrolier, see railing sheets. For electrolier anchor bolts, see Standard Plan ES-7B.

KNOCKOUT SCHEDULE
No. 9 AND 9A PULL BOX

(A) 41 C, 2 each end, 2 on bottom.
(B) 27 C, 1 each end, 1 on bottom.

STATE OF CALIFORNIA
DEPARTMENT OF TRANSPORTATION

SIGNAL, LIGHTING AND ELECTRICAL SYSTEMS
ELECTRICAL DETAILS
STRUCTURE INSTALLATIONS

NO SCALE

ALL DIMENSIONS ARE IN MILLIMETERS UNLESS OTHERWISE SHOWN

ES-7A

STD. PLAN ES-7A

Return to Table of Contents

DIST	COUNTY	ROUTE	KILOMETER POST TOTAL PROJECT	SHEET NO.	TOTAL SHEETS

Caltrans Metric

Les Kubel
REGISTERED ELECTRICAL ENGINEER

July 1, 1997
PLANS APPROVAL DATE

REGISTERED PROFESSIONAL ENGINEER Les Kubel No. E6503 Exp. 9-30-98 ELECTRICAL STATE OF CALIFORNIA

The State of California or its officers or agents shall not be responsible for the accuracy or completeness of electronic copies of this plan sheet.

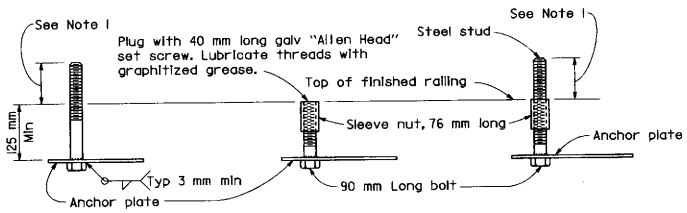

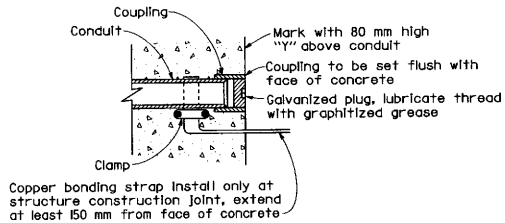

DETAIL C
CONDUIT TERMINATION

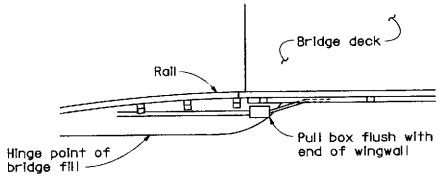

NOTES

1. Anchor bolt or stud length shall be such that thread extends 13 mm maximum above nut on level base plate after grouting. See Detail "N".
2. Electrolier anchor bolts shall be held in position for pouring by means of anchor plates and suitable templates. Deviation from the true position, vertical and height, shall not exceed 1.5 mm.
3. See railing sheets for reinforcement and structural details at electroliers and pull boxes.

DETAIL B
ELECTROLIER ANCHOR BOLTS

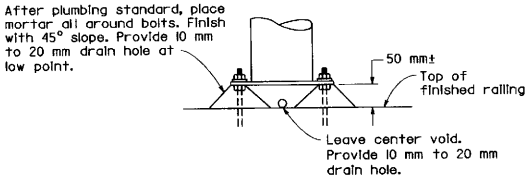

DETAIL N
GROUTING AT ELECTROLIER

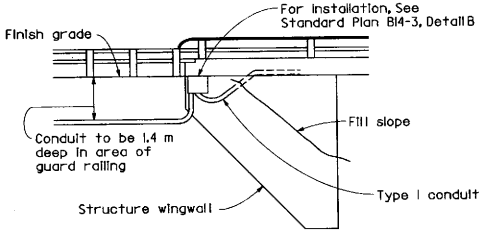

DETAIL I
CONDUIT TERMINATION

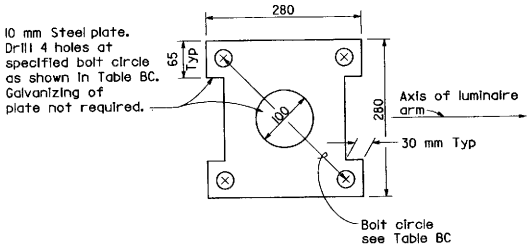

TABLE BC

Type	Bolt Circle	Anchor Bolt Diameter
15	280 mm	25 mm
21	305 mm	32 mm

ANCHOR PLATE

STATE OF CALIFORNIA
DEPARTMENT OF TRANSPORTATION

SIGNAL, LIGHTING AND ELECTRICAL SYSTEMS ELECTRICAL DETAILS STRUCTURE INSTALLATIONS

NO SCALE

ALL DIMENSIONS ARE IN MILLIMETERS UNLESS OTHERWISE SHOWN

ES-7B

STD. PLAN ES-7B

Return to Table of Contents

DIST	COUNTY	ROUTE	KILOMETER POST TOTAL PROJECT	SHEET NO.	TOTAL SHEETS

Les Kubel
REGISTERED ELECTRICAL ENGINEER

July 1, 1997
PLANS APPROVAL DATE

The State of California or its officers or agents shall not be responsible for the accuracy or completeness of electronic copies of this plan sheet.

REGISTERED PROFESSIONAL ENGINEER
Les Kubel
No. E6503
Exp. 9-30-98
ELECTRICAL
STATE OF CALIFORNIA

Metric

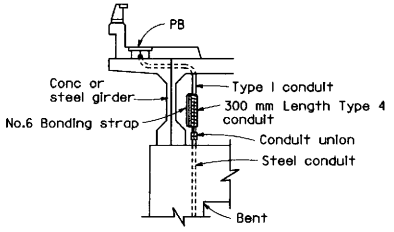

DETAIL R
CONDUIT RISER CONNECTION

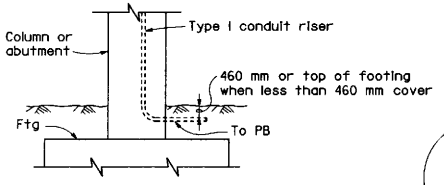

DETAIL T
LOWER END OF CONDUIT RISER AT COLUMN OR ABUTMENT

Conduit passing through girder or diaphragm of box girder section shall be either cast into concrete or passed through opening. Opening shall not be drainage opening and shall be only as large as required to install conduit. Conduit shall be run either parallel to or at right angles to girders.

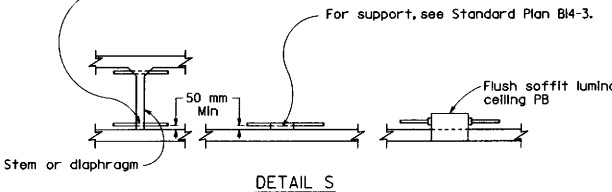

DETAIL S
CONDUIT INSTALLATION WITHIN BOX GIRDER SECTIONS

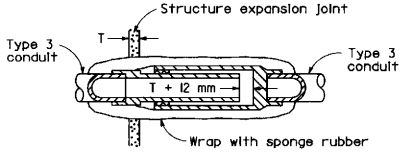

NON-METALLIC CONDUIT INSTALLATION

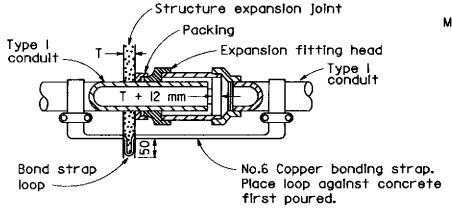

METALLIC CONDUIT INSTALLATION

DETAIL X
CONDUIT EXPANSION FITTINGS

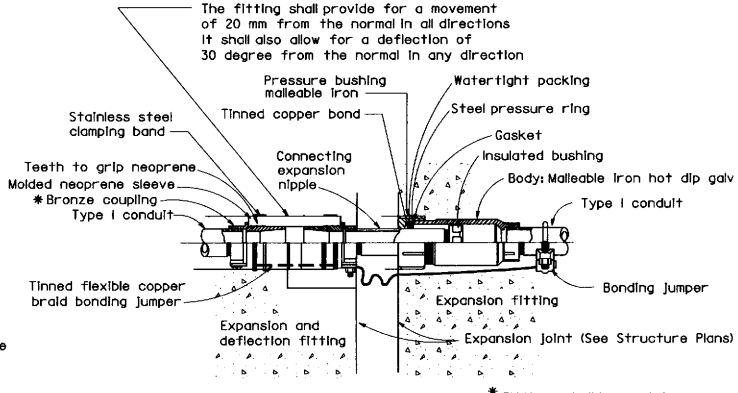

DETAIL XY
COMBINATION EXPANSION DEFLECTION FITTINGS

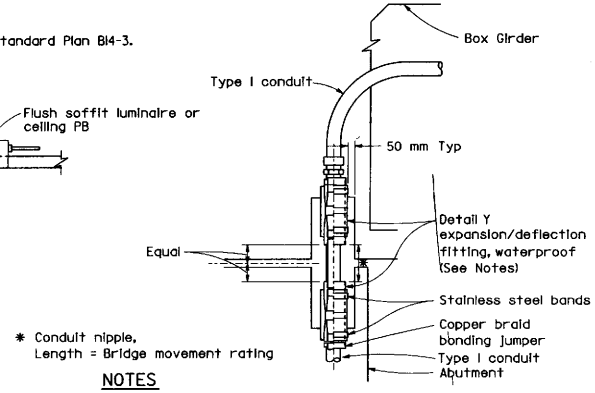

NOTES

1. Fitting and pocket required only where movement can occur between girder and abutment.
2. Fill pocket around fitting with resilient waterproof compound.

DETAIL U
CONDUIT RISER CONNECTION AT COLUMN OR ABUTMENT

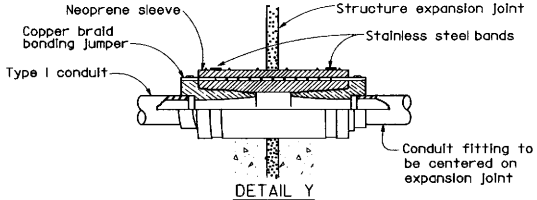

DETAIL Y
CONDUIT EXPANSION DEFLECTION FITTING

NOTES

1. Except for sidewalk joints, a conduit expansion fitting or expansion-deflection fitting shall be installed at each 12 mm or greater structure joint, hinge or abutment.
2. Fittings or combination of fittings shall be installed to accommodate the movement rating as shown on the structure plans.
3. Fittings shall be installed parallel to superstructure girders.
4. Where lateral movement greater than 6 mm may occur, a neoprene sleeve expansion-deflection fitting shall be installed straddling the joint.
5. The external bond strap may be omitted when the fitting is provided with an internal bond equivalent to a No. 6 copper bond in Type I conduit or the No. 8 equipment grounding conductor in Type 3 conduit.

STATE OF CALIFORNIA
DEPARTMENT OF TRANSPORTATION

SIGNAL, LIGHTING AND ELECTRICAL SYSTEMS ELECTRICAL DETAILS STRUCTURE INSTALLATIONS

NO SCALE

ALL DIMENSIONS ARE IN MILLIMETERS UNLESS OTHERWISE SHOWN

ES-7C

STD. PLAN ES-7C

Return to Table of Contents

DIST	COUNTY	ROUTE	KILOMETER POST TOTAL PROJECT	SHEET NO.	TOTAL SHEETS

California Metric

REGISTERED ELECTRICAL ENGINEER

July 1, 1997
PLANS APPROVAL DATE

Les Kubel No. E6503 Exp. 9-30-98 ELECTRICAL — REGISTERED PROFESSIONAL ENGINEER — STATE OF CALIFORNIA

The State of California or its officers or agents shall not be responsible for the accuracy or completeness of electronic copies of this plan sheet.

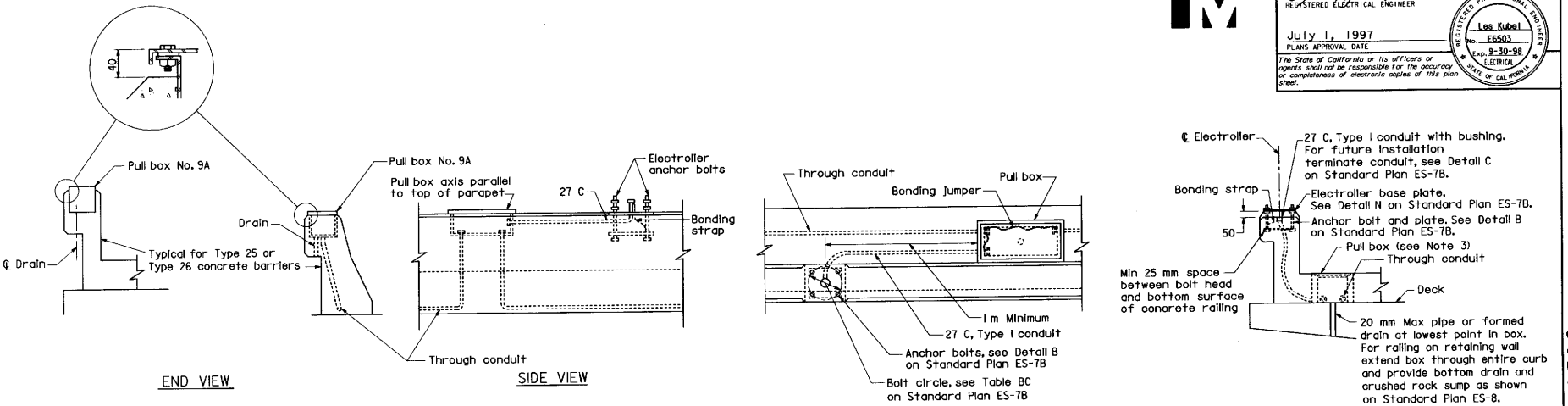

NO. 3½, 5 or 6 PULL BOX INSTALLATION

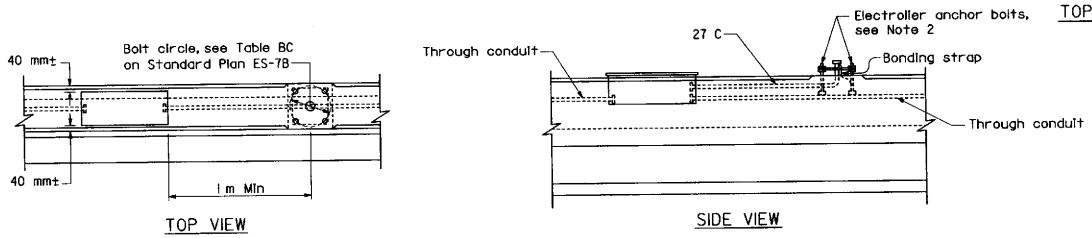

NO. 9A PULL BOX INSTALLATION

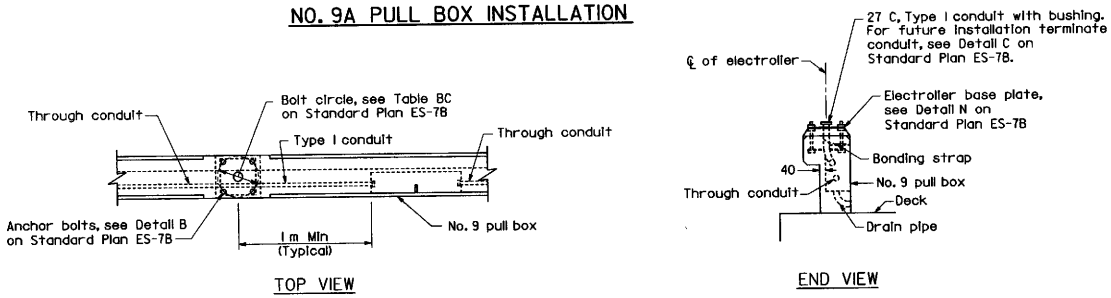

NO. 9 PULL BOX INSTALLATION

NOTES

1. Axis of pull box shall be parallel to top of barrier, sidewalk, or railing.
2. See railing sheet for reinforcement and structural details at electroliers and pull boxes.
3. Top of pull boxes in sidewalk areas shall be flush with top of sidewalk. Modify base of pull box as required.
4. Boxes inside of vertical barrier or railing shall be closed during pouring of PCC with 6 mm plywood of sufficient size to provide 1:1 chamfer on 3 sides of cover. Upper edge of plywood shall fit against lower edge of raintight hood.
5. Use drain in center if box is horizontal, or at low end if box is inclined. When box is mounted in sloping parapet drill 12 mm elongated drain hole inside at center or near end as required for drainage.
6. For electrolier anchor bolts, see Standard Plan ES-7B.

STATE OF CALIFORNIA
DEPARTMENT OF TRANSPORTATION

SIGNAL, LIGHTING AND ELECTRICAL SYSTEMS ELECTRICAL DETAILS STRUCTURE INSTALLATIONS

NO SCALE

ALL DIMENSIONS ARE IN MILLIMETERS UNLESS OTHERWISE SHOWN

ES-7D

STD. PLAN ES-7D

Return to Table of Contents

DIST	COUNTY	ROUTE	KILOMETER POST TOTAL PROJECT	SHEET NO.	TOTAL SHEETS

Caltrans Metric

Les Kubel
REGISTERED ELECTRICAL ENGINEER

July 1, 1997
PLANS APPROVAL DATE

REGISTERED PROFESSIONAL ENGINEER Les Kubel No. E6503 Exp. 9-30-98 ELECTRICAL STATE OF CALIFORNIA

The State of California or its officers or agents shall not be responsible for the accuracy or completeness of electronic copies of this plan sheet.

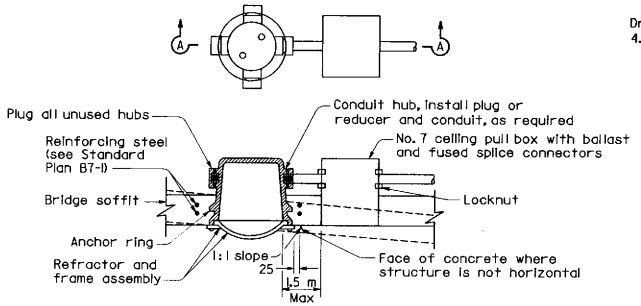

SECTION A-A

NOTES

1. Place 6 mm plywood disk in body opening during pouring.
2. Install luminaire with axis vertical and "street side" of refractor oriented as indicated on lighting layout.
3. Luminaire shall be located so as to provide minimum clearance of 600 mm from inside surface of girders and 300 mm from near face of diaphragm.

DETAIL F
FLUSH SOFFIT LUMINAIRE INSTALLATION

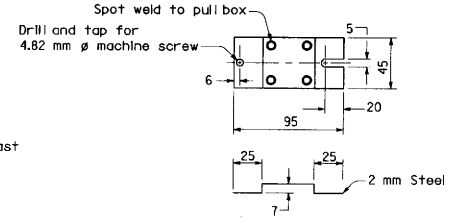

TERMINAL BLOCK MOUNTING BRACKET

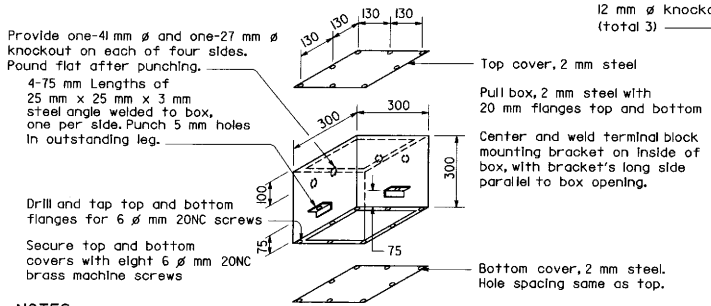

NOTES

1. Install with bottom flange flush with concrete.
2. Both covers shall be on box during pouring.

NO. 7 CEILING PULL BOX

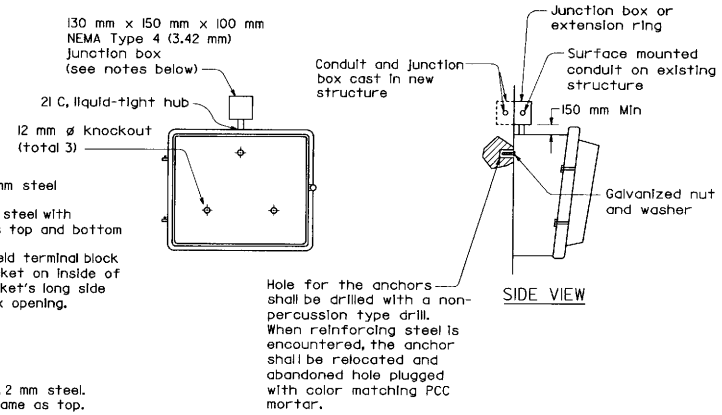

DETAIL W
WALL LUMINAIRE INSTALLATION
(Typical)

NOTES

1. For existing structures, provide external mounting taps (total 4).
2. For new structures, provide extension ring.

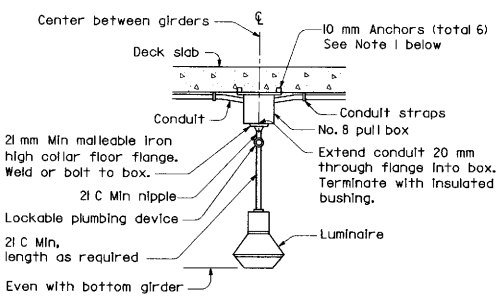

NOTES

1. Cast-in-place inserts or expansion anchor.
2. For future installation, omit suspension conduit and luminaire, close flange with galvanized plug.
3. If conduit smaller than the knockout size is used it shall be bonded to the box.

DETAIL P
PENDANT SOFFIT LUMINAIRE INSTALLATION

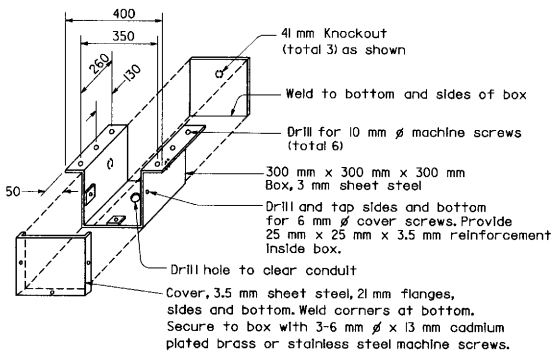

NO. 8 PULL BOX

STATE OF CALIFORNIA
DEPARTMENT OF TRANSPORTATION

SIGNAL, LIGHTING AND ELECTRICAL SYSTEMS
ELECTRICAL DETAILS
STRUCTURE INSTALLATIONS

NO SCALE

ALL DIMENSIONS ARE IN MILLIMETERS UNLESS OTHERWISE SHOWN

ES-7E

STD. PLAN ES-7E

Return to Table of Contents

DIST	COUNTY	ROUTE	KILOMETER POST TOTAL PROJECT	SHEET NO.	TOTAL SHEETS

REGISTERED ELECTRICAL ENGINEER

July 1, 1997
PLANS APPROVAL DATE

The State of California or its officers or agents shall not be responsible for the accuracy or completeness of electronic copies of this plan sheet.

REGISTERED PROFESSIONAL ENGINEER — Les Kubel — No. E6503 — Exp. 9-30-98 — ELECTRICAL — STATE OF CALIFORNIA

Caltrans Metric

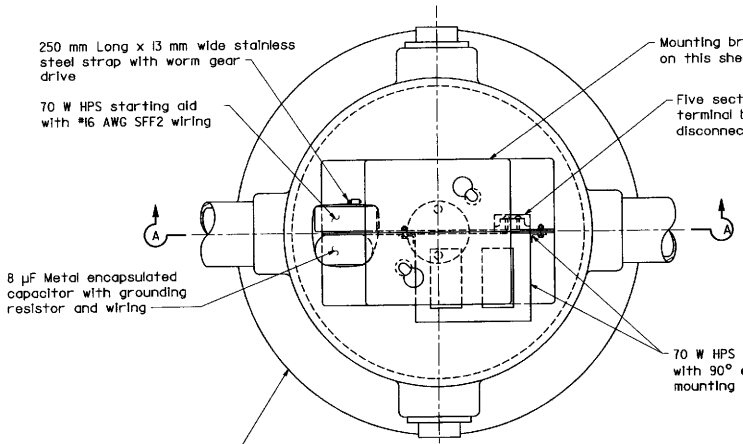

PLAN

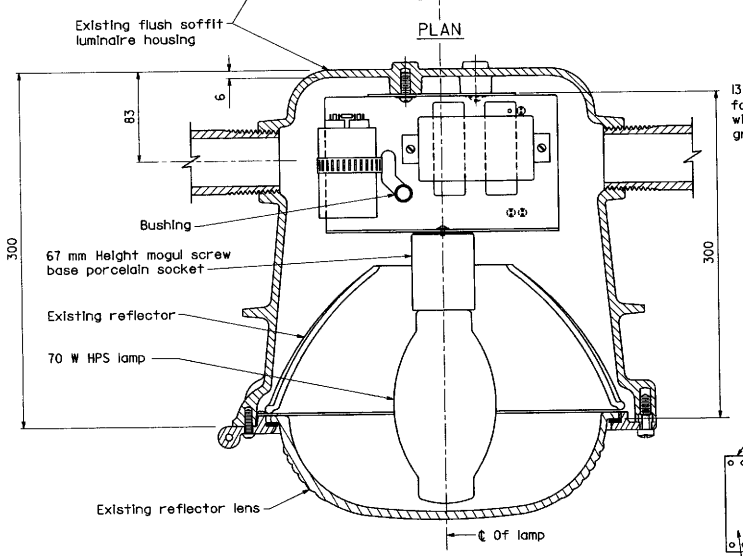

SECTION A-A

FLUSH SOFFIT LUMINAIRE ASSEMBLY

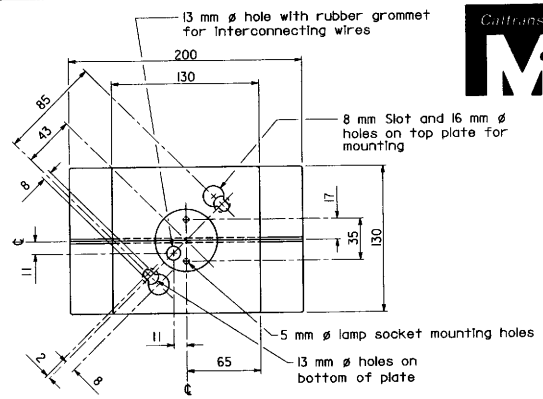

TOP VIEW

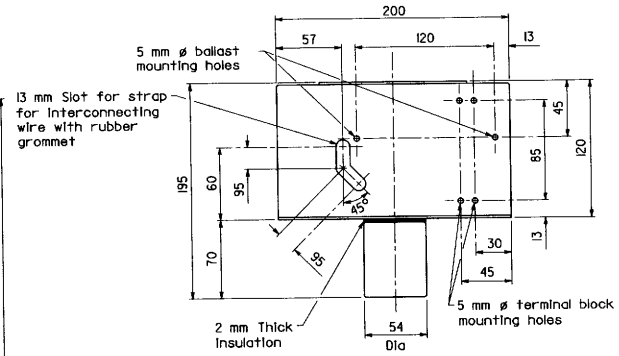

FRONT VIEW

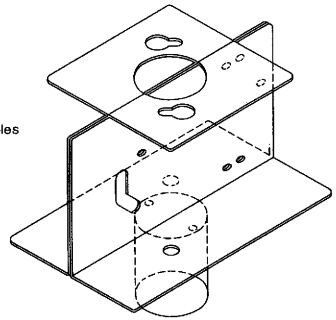

Preform two sheets 1.6 mm mild steel as shown, spotweld together in each corner with four spotwelds.

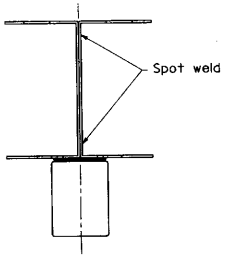

SIDE VIEW

MOUNTING BRACKET DETAILS

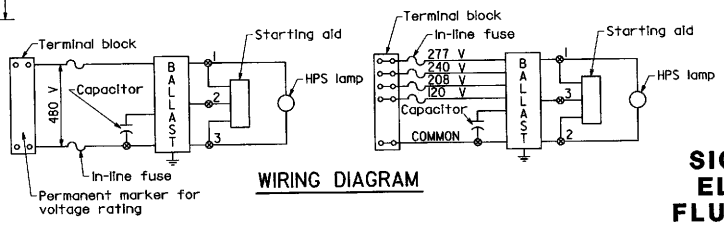

WIRING DIAGRAM

NOTES

1. All fixture wiring shall be Type SFF-2.
2. Use 4.2 mm ø machine screws, lockwashers and nuts for mounting ballast and terminal strips.
3. In-line fuse as required on Standard Plan ES-14.

STATE OF CALIFORNIA
DEPARTMENT OF TRANSPORTATION

SIGNAL, LIGHTING AND ELECTRICAL SYSTEMS FLUSH SOFFIT LUMINAIRE MODIFICATION DETAILS STRUCTURE INSTALLATIONS

NO SCALE

ALL DIMENSIONS ARE IN MILLIMETERS UNLESS OTHERWISE SHOWN

ES-7F

STD. PLAN ES-7F

Return to Table of Contents

DIST.	COUNTY	ROUTE	KILOMETER POST TOTAL PROJECT	SHEET NO.	TOTAL SHEETS

Caltrans Metric

Les Kubel
REGISTERED ELECTRICAL ENGINEER

July 1, 1997
PLANS APPROVAL DATE

REGISTERED PROFESSIONAL ENGINEER — Les Kubel — No. E6503 — Exp. 9-30-98 — ELECTRICAL — STATE OF CALIFORNIA

The State of California or its officers or agents shall not be responsible for the accuracy or completeness of electronic copies of this plan sheet.

NOTES ON PULL BOXES

1. Traffic pull box shall be provided with steel cover and special concrete footing. Steel cover shall have embossed non-skid pattern.
2. Steel reinforcing shall be as regularly used in the standard products of the respective manufacturer.
3. Top of pull boxes shall be flush with surrounding grade or top of adjacent curb, except that in unpaved areas where pull box is not immediately adjacent to and protected by a concrete foundation, pole or other protective construction, the box shall be placed with its top 30 mm above surrounding grade. Where practicable, pull boxes shown in the vicinity of curbs shall be placed adjacent to the back of curb, and pull boxes shown adjacent to standards shall be placed on side of foundation facing away from traffic, unless otherwise noted. When pull box is installed in sidewalk area, the depth of the pull box shall be adjusted so that the top of the pull box is flushed with the top of the sidewalk.
4. Pull box covers shall be marked as follows.
   a. No. 3½ pull box.
      1) "SIGNAL" Traffic signal circuits with or without street and/or sign lighting circuits.
      2) "ST LIGHTING" Street and/or sign lighting circuits where no voltage is above 600 V.
      3) "SERVICE" Service circuits between service point and service disconnect.
      4) "SPRINKLER-CONTR" Sprinkler control circuits, 50 V or less.
      5) "CALTRANS" On all pull boxes, except pull boxes marked "SPRINKLER-CONTR".
      6) "TELEPHONE" Telephone service.
   b. No. 5,6,9 or 9A pull boxes.
      1) "TRAFFIC SIGNAL" Traffic signal circuits with or without street and/or sign lighting circuits.
      2) "STREET LIGHTING" Street and/or sign lighting circuits where no voltage is above 600 V.
      3) "STREET LIGHTING-HIGH VOLTAGE" Street and/or sign lighting circuits where voltage is above 600 V.
      4) "SERVICE" Service circuits between service point and service disconnect.
      5) "SPRINKLER-CONTROL" Sprinkler control circuits, 50 V or less.
      6) "IRRIGATION" Circuits to irrigation controller 120 V or more.
      7) "RAMP METER" Ramp meter circuits.
      8) "COUNT STATION" Count and/or speed monitor circuits.
      9) "COMMUNICATION" Communication circuits.
      10) "CALTRANS" On all pull boxes, except pull boxes marked "SPRINKLER-CONTROL".
      11) "TELEPHONE" Telephone service.
      12) "TOS COMMUNICATIONS" TOS communications trunk line.
      13) "TOS POWER" TOS power.
      14) "TDC POWER" Telephone Demarcation Cabinet power.
      15) "CCTV" Closed Circuit Television circuits.
      16) "TMS" Traffic Monitoring Station circuits.
      17) "CMS" Changeable Message Sign circuits.
      18) " HAR" Highway Advisory Radio circuits.
5. Bonding jumper for metal covers shall be 1 m long, minimum.
6. The nominal dimensions of the opening in which the cover sets shall be the same as the cover dimensions except the length and width dimensions shall be 3 mm greater.
7. All covers and boxes shall be interchangeable with California standard male and female gages. When interchanged with a standard male or female gage, the top surfaces shall be flush within 3 mm. Top outside edge of all concrete covers and pull boxes shall have a 6 mm minimum radius.
8. Pull box shall not be installed within the boundaries of new or existing curb ramps.

DIMENSION TABLE

Pull Box	CONCRETE BOX				NON-PCC BOX		CONCRETE OR NON-PCC COVERS				
	Minimum * Thickness	Minimum Depth Box and Extension	LO (mm)	WO (mm)	Minimum ** Thickness	Minimum Depth Box and Extension	L ** (mm)	W ** (mm)	R (mm)	Edge Thickness	Edge Taper
No. 3½	25 mm	No Extension	510	360	8 mm	No Extension	390	260	30	45 mm	3 mm
No. 5	25 mm	560 mm	710	460	8 mm	510 mm	590	350	32	50 mm	3 mm
No. 6	40 mm	600 mm	910	580	10 mm	510 mm	780	450	32	50 mm	3 mm

* Excluding conduit web ** Top dimension

DIMENSION TABLE

Pull Box	CONCRETE BOX				NON-PCC BOX		STEEL COVER				
	Minimum * Thickness	Minimum Depth Box or Extension	LO (mm)	WO (mm)	Minimum Thickness	Minimum Depth Box and Extension	L ** (mm)	W ** (mm)	R (mm)	Edge Thickness	Edge Taper
No. 3½(T)	40 mm	300 mm	530±	370±	Does Not Apply		510±	350±	0	13 mm Min	None
No. 5(T)	45 mm	300 mm	750±	480±	Does Not Apply		690±	410±	0	13 mm Min	None
No. 6(T)	50 mm	300 mm	900±	600±	Does Not Apply		840±	510±	0	13 mm Min	None

* Excluding conduit web ** Top dimension

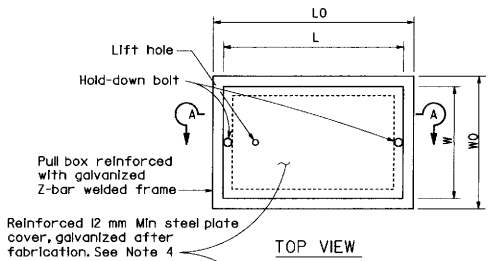

TOP VIEW

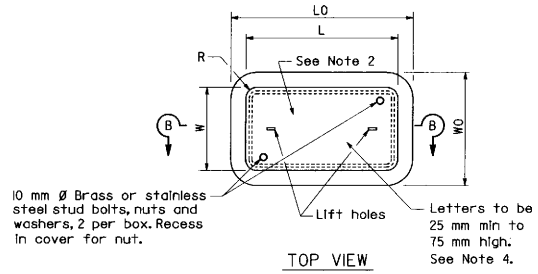

TOP VIEW

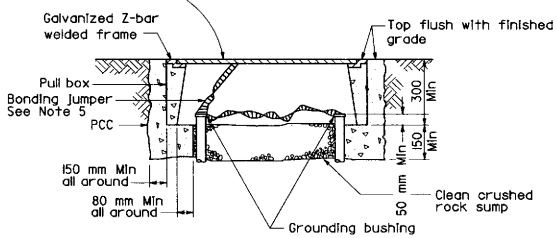

SECTION A-A

NO. 3½(T), NO. 5(T) AND NO. 6(T) TRAFFIC PULL BOX

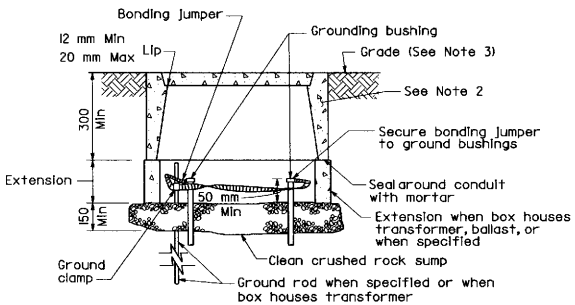

SECTION B-B

INSTALLATION DETAILS

STATE OF CALIFORNIA
DEPARTMENT OF TRANSPORTATION

SIGNAL, LIGHTING AND ELECTRICAL SYSTEMS PULL BOX DETAILS

NO SCALE

ALL DIMENSIONS ARE IN MILLIMETERS UNLESS OTHERWISE SHOWN

ES-8

STD. PLAN ES-8

Return to Table of Contents

DIST	COUNTY	ROUTE	KILOMETER POST TOTAL PROJECT	SHEET NO.	TOTAL SHEETS

REGISTERED CIVIL ENGINEER

July 1, 1997
PLANS APPROVAL DATE

The State of California or its officers or agents shall not be responsible for the accuracy or completeness of electronic copies of this plan sheet.

REGISTERED PROFESSIONAL ENGINEER Jeffrey B. Woody No. C41260 Exp. 3-31-99 CIVIL STATE OF CALIFORNIA

Caltrans Metric

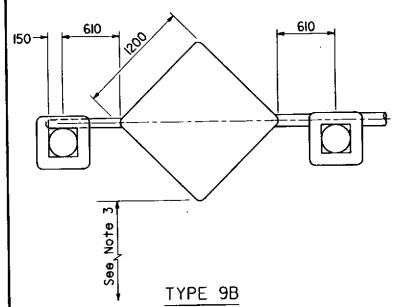

TYPE 9B

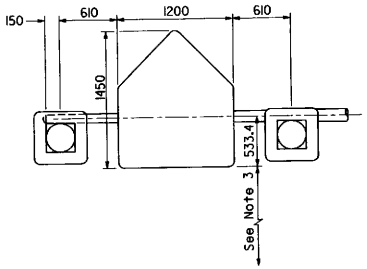

TYPE 9A

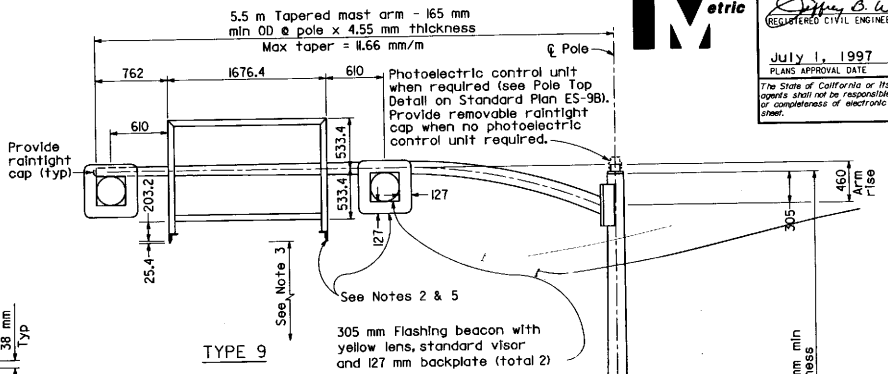

TYPE 9

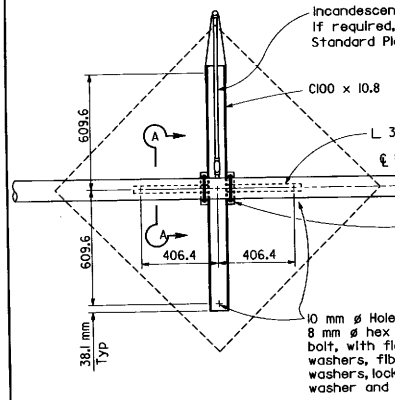

TYPE 9B

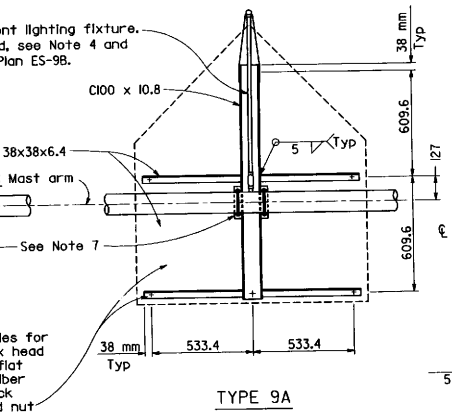

TYPE 9A

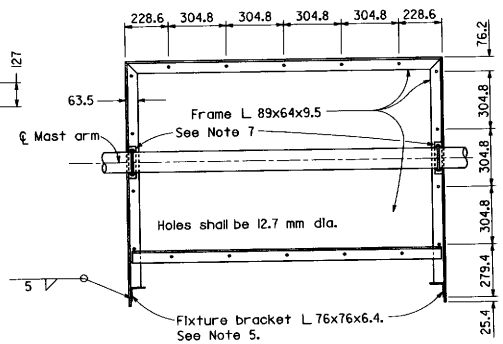

TYPE 9

FRAME DETAILS

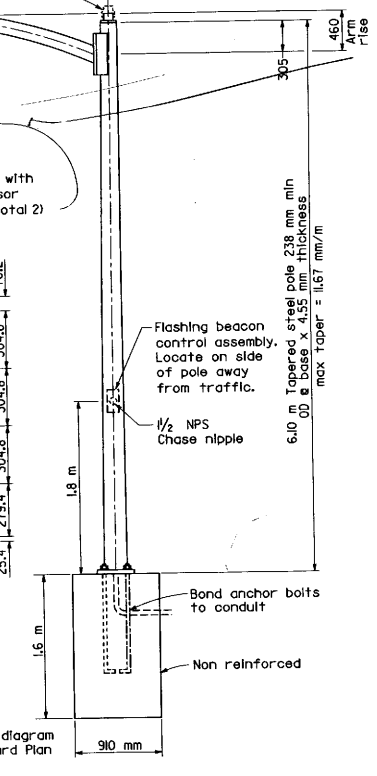

ELEVATION

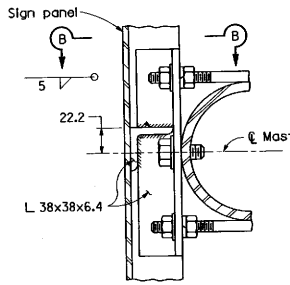

SECTION A-A

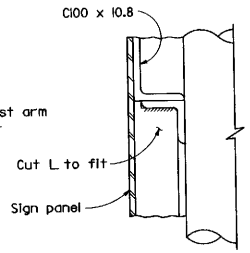

SECTION B-B

TYPE 9B

NOTES

1. All splices between fluorescent fixture sockets shall be waterproofed.
2. Install flashing beacons and sign frame. Flashing beacons to be MAT mounted on pipe tenon. (See Standard Plan ES-6S Detail S)
3. Vertical clearance to be 5.2 m minimum between roadway and bottom of signal panel or lighting fixture bracket.
4. Special Provisions or plans will indicate when incandescent lighting fixture is required on Type 9A or 9B sign frames.
5. All Type 9 sign frames shall be provided with a 910 mm fluorescent fixture. For fluorescent lighting details see Standard Plan ES-30.
6. Anchor bolts shall be ASTM A-307.
7. See Standard Plan ES-9B for sign frame mounting details.

STATE OF CALIFORNIA
DEPARTMENT OF TRANSPORTATION

SIGNAL, LIGHTING AND ELECTRICAL SYSTEMS CANTILEVER FLASHING BEACON TYPES 9, 9A AND 9B

NO SCALE

ALL DIMENSIONS ARE IN MILLIMETERS UNLESS OTHERWISE SHOWN

ES-9A

STD. PLAN ES-9A

Return to Table of Contents

DIST	COUNTY	ROUTE	KILOMETER POST TOTAL PROJECT	SHEET NO.	TOTAL SHEETS

REGISTERED CIVIL ENGINEER

July 1, 1997
PLANS APPROVAL DATE

REGISTERED PROFESSIONAL ENGINEER Jeffrey B. Woody No. C41260 Exp. 3-31-99 CIVIL STATE OF CALIFORNIA

The State of California or its officers or agents shall not be responsible for the accuracy or completeness of electronic copies of this plan sheet.

Caltrans Metric

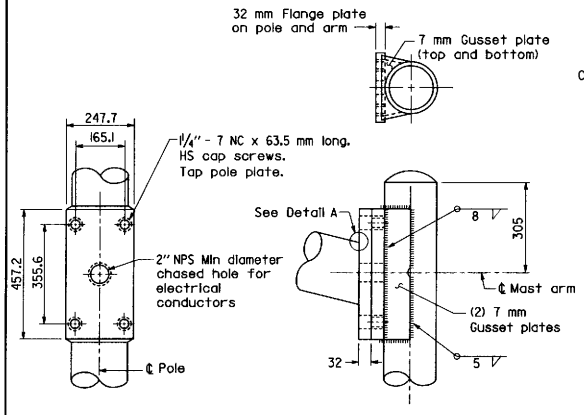

MAST ARM CONNECTION DETAILS

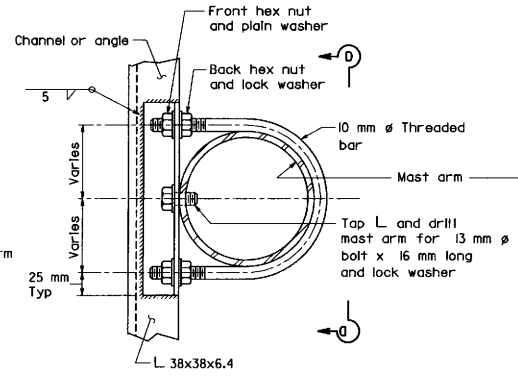

NOTE

Tighten front hexagon nuts first, then tighten back hexagon nuts.

NOTE

Lighting details not shown see Note 5 on Standard Plan ES-9A. Mounting to channel shown, mounting to angle similar.

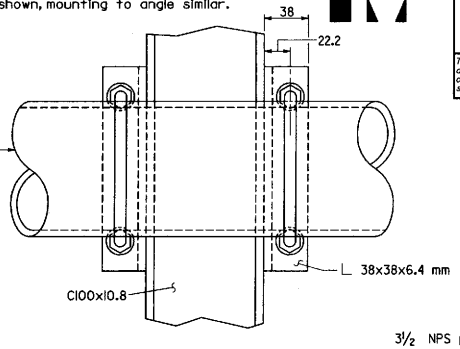

VIEW D-D

SIGN FRAME MOUNTING DETAILS

All types.

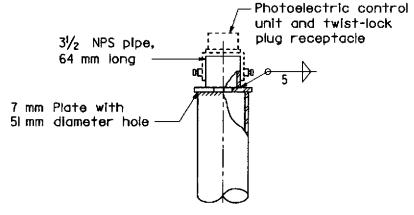

POLE TOP DETAIL

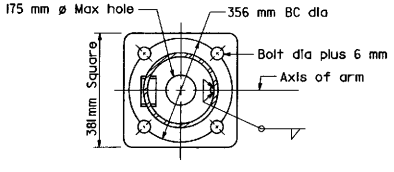

PLAN

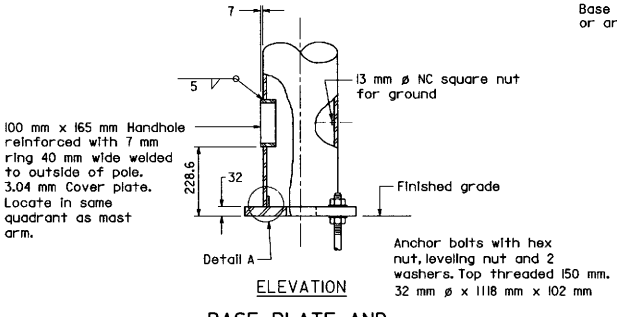

ELEVATION

BASE PLATE AND ANCHORAGE DETAILS

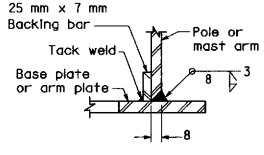

DETAIL A

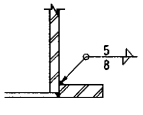

ALTERNATIVE DETAIL A

For pole-base plate only.

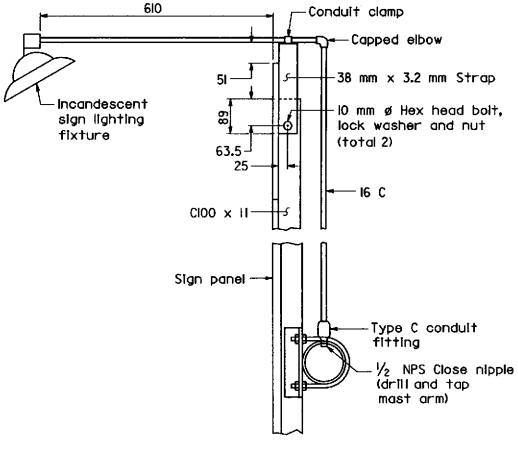

INCANDESCENT LIGHTING FIXTURE TYPES 9A AND 9B

See Note 4 on Standard Plan ES-9A.

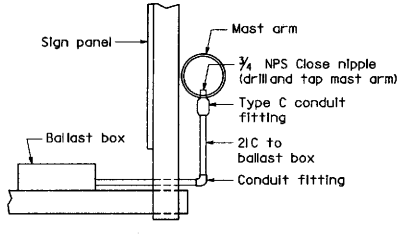

FLUORESCENT LIGHTING FIXTURE TYPE 9 FRAME

STATE OF CALIFORNIA
DEPARTMENT OF TRANSPORTATION

SIGNAL, LIGHTNING AND ELECTRICAL SYSTEMS CANTILEVER FLASHING BEACON TYPES 9, 9A AND 9B

NO SCALE

ALL DIMENSIONS ARE IN MILLIMETERS UNLESS OTHERWISE SHOWN

ES-9B

STD. PLAN ES-9B

Return to Table of Contents

DIST	COUNTY	ROUTE	KILOMETER POST TOTAL PROJECT	SHEET NO.	TOTAL SHEETS

Les Kubel
REGISTERED ELECTRICAL ENGINEER

July 1, 1997
PLANS APPROVAL DATE

REGISTERED PROFESSIONAL ENGINEER
Les Kubel
NO. E6503
EXP. 9-30-98
ELECTRICAL
STATE OF CALIFORNIA

The State of California or its officers or agents shall not be responsible for the accuracy or completeness of electronic copies of this plan sheet.

Caltrans Metric

ISOLUX CURVE - MINIMUM

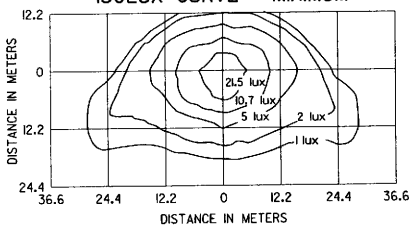

TYPE III MEDIUM CUTOFF

Cutoff Highway Lighting Luminaire
9.1 m Mounting Height
LAMP OPERATED AT 22 000 lm
200 W HIGH PRESSURE SODIUM LAMP
ANSI DESIGNATION S66

ISOLUX CURVE - MINIMUM

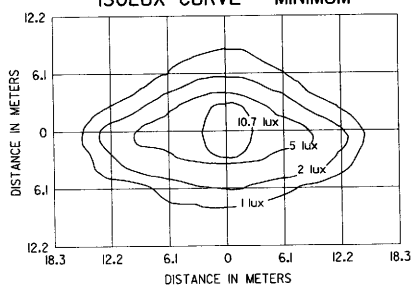

PENDANT SOFFIT LUMINAIRE - 70 W
TYPE III SHORT

5.2 m Mounting Height
LAMP OPERATED AT 5800 lm
HIGH PRESSURE SODIUM LAMP
ANSI DESIGNATION S62

ISOLUX CURVE - MINIMUM

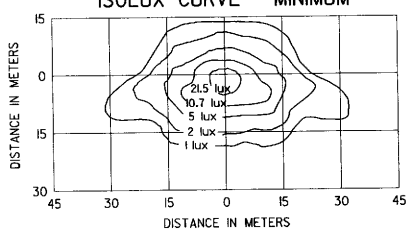

TYPE III MEDIUM CUTOFF

Cutoff Highway Lighting Luminaire
9.1 m Mounting Height
LAMP OPERATED AT 16 000 lm
150 W HIGH PRESSURE SODIUM LAMP
ANSI DESIGNATION S55

ISOLUX CURVE - MINIMUM

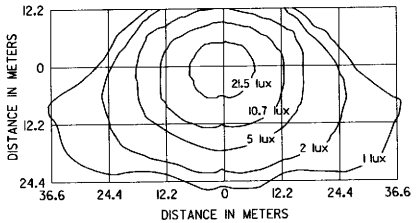

TYPE III MEDIUM CUTOFF

Cutoff Highway Lighting Luminaire
12.2 m Mounting Height
LAMP OPERATED AT 37 000 lm
310 W HIGH PRESSURE SODIUM LAMP
ANSI DESIGNATION S67

ISOLUX CURVE - MINIMUM

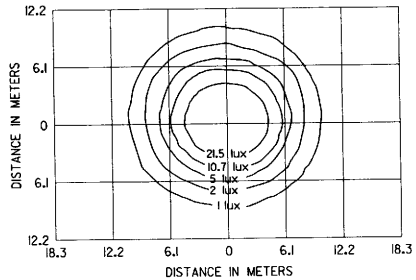

PENDANT SOFFIT LUMINAIRE - 70 W

5.2 m Mounting Height
LAMP OPERATED AT 5800 lm
HIGH PRESSURE SODIUM LAMP
ANSI DESIGNATION S62

ISOLUX CURVE - MINIMUM

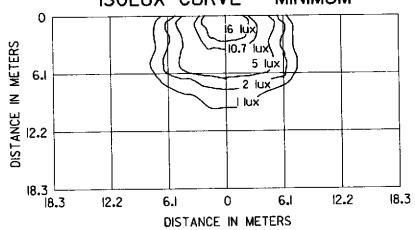

DETAIL "W" WALL LUMINAIRE

4.6 m Mounting Height
LAMP OPERATED AT 5800 lm
70 W HIGH PRESSURE SODIUM LAMP
ANSI DESIGNATION S62

ISOLUX CURVE - MINIMUM

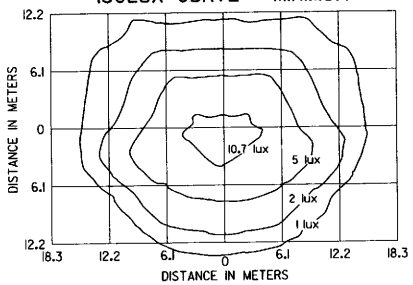

DETAIL "F" SOFFIT LUMINAIRE

5.2 m Mounting Height
LAMP OPERATED AT 5800 lm
70 W HIGH PRESSURE SODIUM LAMP
ANSI DESIGNATION S62

ISOLUX CURVE - MINIMUM

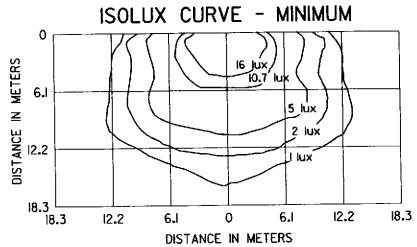

DETAIL "W" WALL LUMINAIRE

4.6 m Mounting Height
LAMP OPERATED AT 9500 lm
100 W HIGH PRESSURE SODIUM LAMP
ANSI DESIGNATION S54

NOTES

Isolux diagrams show the minimum horizontal lux required.

STATE OF CALIFORNIA
DEPARTMENT OF TRANSPORTATION

SIGNAL, LIGHTING AND ELECTRICAL SYSTEMS ISOLUX DIAGRAMS

NO SCALE

ALL DIMENSIONS ARE IN MILLIMETERS UNLESS OTHERWISE SHOWN

ES-10

STD. PLAN ES-10

Return to Table of Contents

DIST	COUNTY	ROUTE	KILOMETER POST TOTAL PROJECT	SHEET NO.	TOTAL SHEETS

Les Kubel
REGISTERED ELECTRICAL ENGINEER

July 1, 1997
PLANS APPROVAL DATE

REGISTERED PROFESSIONAL ENGINEER Les Kubel No. E6503 Exp. 9-30-98 ELECTRICAL STATE OF CALIFORNIA

The State of California or its officers or agents shall not be responsible for the accuracy or completeness of electronic copies of this plan sheet.

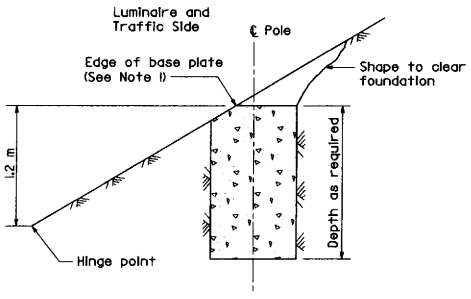

CUT SLOPES
STEEPER THAN 4:1
See Note 3

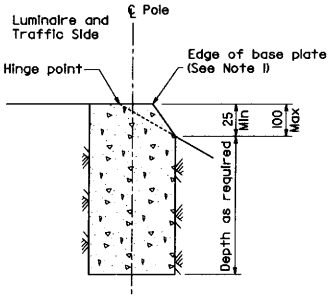

FILL SLOPES
STEEPER THAN 4:1
See Note 3

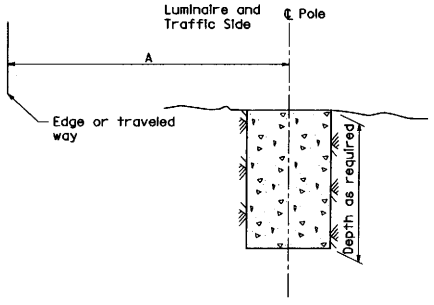

FLAT SECTIONS, CUT OR FILL SLOPES
4:1 OR FLATTER

STANDARD TYPE	SETBACK (DIMENSION A)
32	9 m Min
31	6 m Min
30	Mast Arm Length (Min)
22	
15	

FOUNDATIONS ADJACENT TO ALL ROADWAYS EXCEPT IN SIDEWALK, MEDIAN AND ISLAND AREAS

NOTES

1. Where a portion of the foundation is above grade the top edges shall have a 25 mm chamfer.
2. Pull boxes for electroliers and signal standards shall be located at the same station (±1.5 m) as the adjacent electrolier or signal standard.
   Pull boxes shall be placed adjacent to back of curb or edge of shoulder except where this is impracticable, a box may be placed in another suitable protected and accessible location.
3. Horizontal setbacks on cut and fill slopes steeper than 4:1 shall not exceed the distances shown for flat sections.

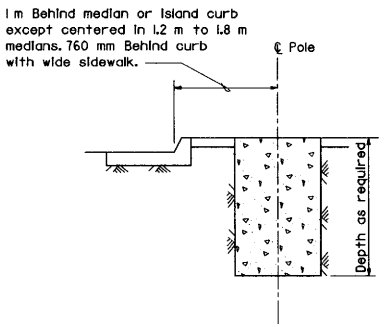

MEDIAN, ISLAND
OR WIDE SIDEWALK
(2 m Wide and wider)

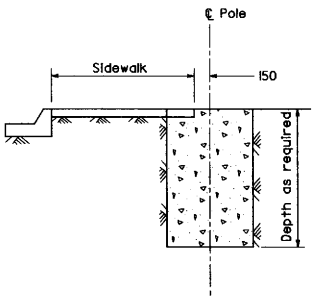

NARROW SIDEWALK
(Less than 2 m wide)

FOUNDATIONS IN SIDEWALK, MEDIAN AND ISLAND AREAS

STATE OF CALIFORNIA
DEPARTMENT OF TRANSPORTATION

SIGNAL, LIGHTING AND ELECTRICAL SYSTEMS FOUNDATION INSTALLATIONS

NO SCALE

ALL DIMENSIONS ARE IN MILLIMETERS UNLESS OTHERWISE SHOWN

ES-11

STD. PLAN ES-11

Return to Table of Contents

DIST	COUNTY	ROUTE	KILOMETER POST TOTAL PROJECT	SHEET NO.	TOTAL SHEETS

Les Kubel
REGISTERED ELECTRICAL ENGINEER

July 1, 1997
PLANS APPROVAL DATE

REGISTERED PROFESSIONAL ENGINEER Les Kubel No. E6503 Exp. 9-30-98 ELECTRICAL STATE OF CALIFORNIA

The State of California or its officers or agents shall not be responsible for the accuracy or completeness of electronic copies of this plan sheet.

Caltrans Metric

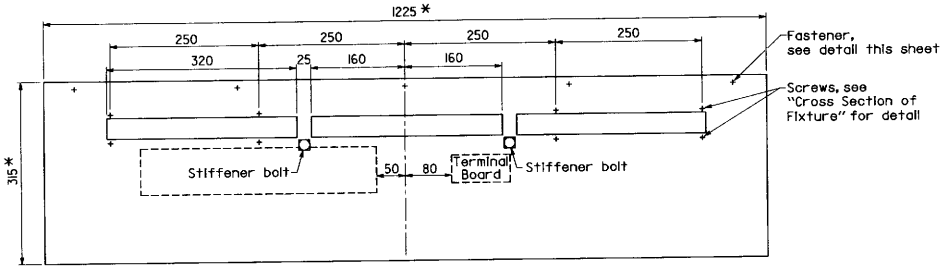

DOOR OF FIXTURE

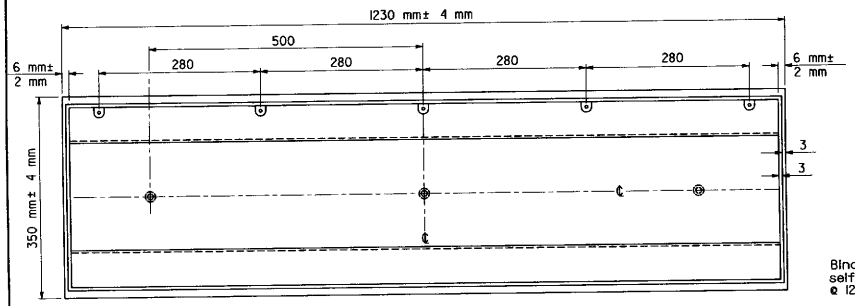

SHELL OF FIXTURE

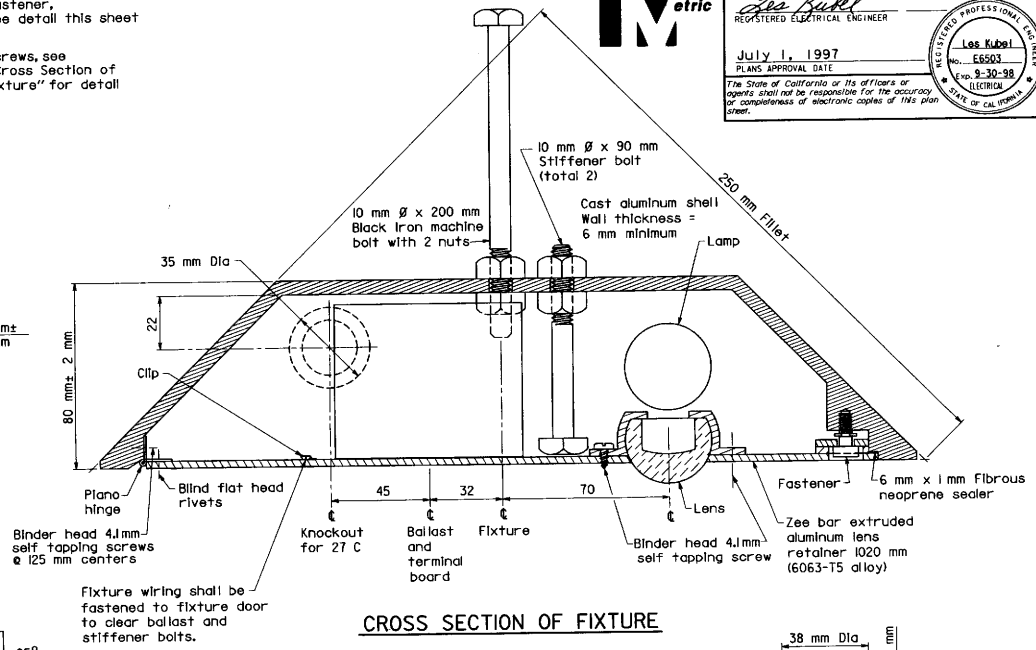

CROSS SECTION OF FIXTURE

*Dimensions of door shall vary to fit fixture shell within 2 mm of actual door recess dimensions.

NOTES

1. The maximum tolerance between door and lens shall be 0.4 mm.
2. Casting dimensions of shell are nominal and are subject to such tolerances as are consistent with sound foundry practice.
3. For fixture locations see Highway or Structure Lighting Plan.

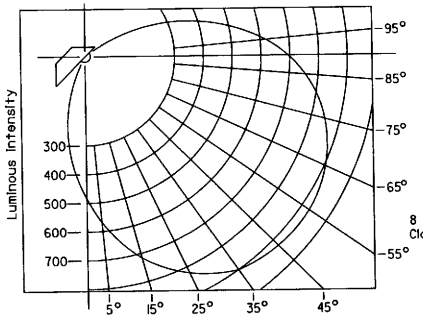

TYPICAL LUMINOUS INTENSITY DISTRIBUTION

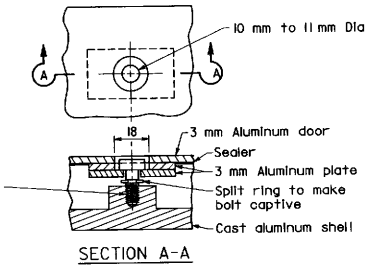

SECTION A-A

FASTENER DETAIL

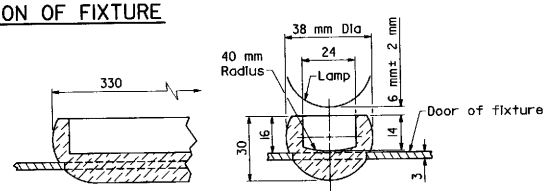

FIXTURE LENS

NOTE

When fixture shell is installed, stiffener bolts shall be set with about 3 mm clearance between bolt head and door before placing concrete. When fixture door is mounted, stiffener bolts shall be reset to barely clear inside of fixture door and inside nut shall be tightened.

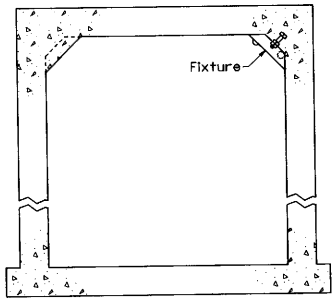

CROSS SECTION OF PEDESTRIAN UC

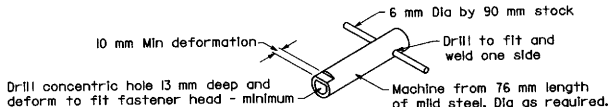

SPECIAL SOCKET WRENCH

STATE OF CALIFORNIA
DEPARTMENT OF TRANSPORTATION

SIGNAL, LIGHTING AND ELECTRICAL SYSTEMS PEDESTRIAN UNDERCROSSING FLUORESCENT LIGHTING FIXTURE

NO SCALE

ALL DIMENSIONS ARE IN MILLIMETERS UNLESS OTHERWISE SHOWN

ES-12

STD. PLAN ES-12

Return to Table of Contents

DIST	COUNTY	ROUTE	KILOMETER POST TOTAL PROJECT	SHEET NO.	TOTAL SHEETS

Caltrans Metric

Les Kubel
REGISTERED ELECTRICAL ENGINEER

July 1, 1997
PLANS APPROVAL DATE

REGISTERED PROFESSIONAL ENGINEER Les Kubel No. E6503 Exp. 9-30-98 ELECTRICAL STATE OF CALIFORNIA

The State of California or its officers or agents shall not be responsible for the accuracy or completeness of electronic copies of this plan sheet.

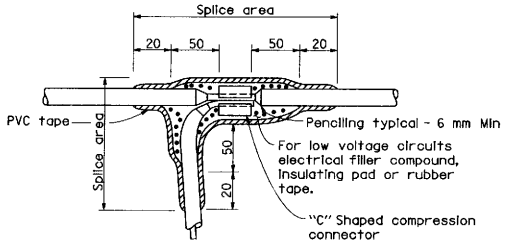

TYPE "C" SPLICE

Between 1 free-end and 1 through conductor

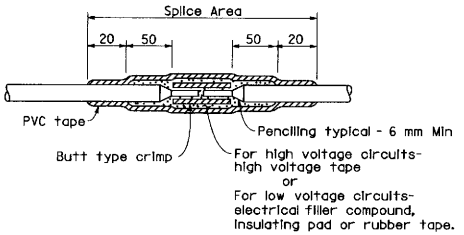

TYPE "S" SPLICE

Between 2 free-ends

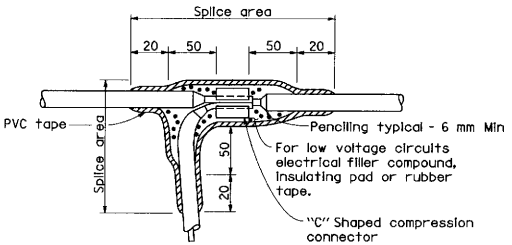

TYPE "T" SPLICE

For 3 free-ends

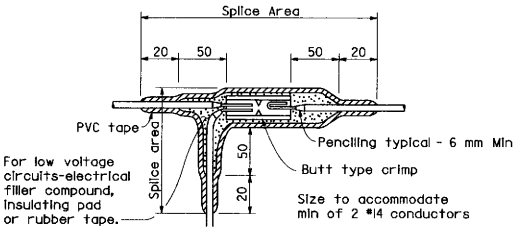

TYPE "ST" SPLICE

NOTES

1. All dimensions are minimum.
2. Rubber tapes shall be rolled after application.

INSULATION METHODS

Low Voltage Circuits (0-600 V)

METHOD "A" (Used only when specified)

1. Completely cover the splice area with electrical insulating coating and allow to dry.
2. Apply electrical filler compound with minimum thickness of 4 mm.
3. Apply 3 layers half lapped polyvinyl chloride tape.
4. Cover entire splice with electrical insulating coating and allow to dry.

OR

METHOD "B"

1. Completely cover the splice area with electrical insulating coating and allow to dry.
2. Apply 2 layers of electrical insulating pad with minimum thickness of 4 mm each layer or 2 layers, half lapped, synthetic oil resistant, self fusing rubber tape.
3. Apply 3 layers half lapped polyvinyl chloride tape.
4. Cover entire splice with electrical insulating coating and allow to dry.

High Voltage Circuits (Over 600 V)

1. Completely cover the splice area with electrical insulating coating and allow to dry.
2. Apply high voltage tape to a minimum thickness equal to original insulation.
3. Apply 3 layers half lapped polyvinyl chloride tape.
4. Cover entire splice with electrical insulating coating and allow to dry.

STATE OF CALIFORNIA
DEPARTMENT OF TRANSPORTATION

SIGNAL, LIGHTING AND ELECTRICAL SYSTEMS SPLICING DETAILS

NO SCALE

ALL DIMENSIONS ARE IN MILLIMETERS UNLESS OTHERWISE SHOWN

ES-13

STD. PLAN ES-13

Return to Table of Contents

DIST	COUNTY	ROUTE	KILOMETER POST TOTAL PROJECT	SHEET NO.	TOTAL SHEETS

REGISTERED ELECTRICAL ENGINEER

July 1, 1997
PLANS APPROVAL DATE

REGISTERED PROFESSIONAL ENGINEER Les Kubel No. E6503 Exp. 9-30-98 ELECTRICAL STATE OF CALIFORNIA

The State of California or its officers or agents shall not be responsible for the accuracy or completeness of electronic copies of this plan sheet.

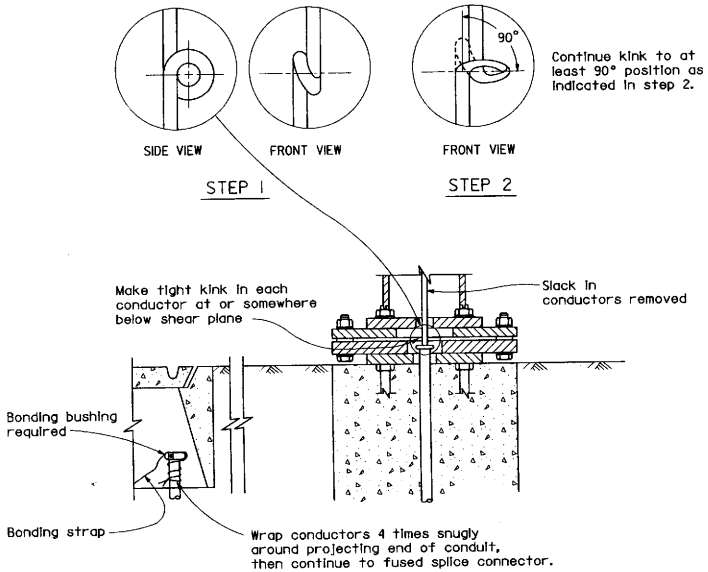

KINKING DETAIL FOR SLIP BASE STANDARDS

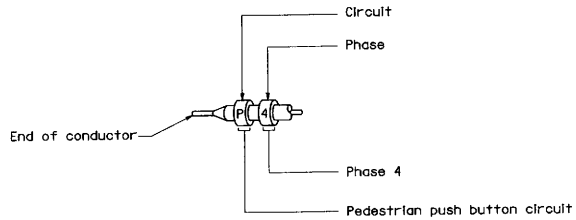

TYPICAL BANDING OF CONDUCTOR ENDS

Primary lines of multiple ballasts shall be provided with fused connectors.
Fuse ratings shall be as noted below.

CIRCUIT VOLTAGE	FUSE VOLTAGE RATING	FUSE CURRENT RATING															
		HPS LAMP BALLAST							LOW PRESSURE SODIUM BALLAST					MERCURY LAMP BALLAST	MULTIPLE TO MULTIPLE TRANSFORMERS (PRIMARY SIDE)		
		70 W	100 W	150 W	200 W	250 W	310 W	400 W	35 W	55 W	90 W	135 W	180 W	175 W	1 kVA	2 kVA	3 kVA
120 V	250 V	5	5	5	5	6	10	10	5	5	8	10	10	10	10	25	35
240 V	250 V	5	5	5	5	5	5	5	3	3	4	5	5	5	6	10	20
480 V	500-600 V	5	5	5	5	5	5	5	2	2	2	3	3	5	3	6	10

FUSE RATINGS FOR FUSED CONNECTORS

LUMINAIRE BALLAST FUSING

STATE OF CALIFORNIA
DEPARTMENT OF TRANSPORTATION

SIGNAL, LIGHTING AND ELECTRICAL SYSTEMS WIRING DETAILS AND FUSE RATINGS

NO SCALE

ALL DIMENSIONS ARE IN MILLIMETERS UNLESS OTHERWISE SHOWN

ES-14

STD. PLAN ES-14

Return to Table of Contents

DIST	COUNTY	ROUTE	KILOMETER POST TOTAL PROJECT	SHEET NO.	TOTAL SHEETS

California Metric

Les Kubel
REGISTERED ELECTRICAL ENGINEER

July 1, 1997
PLANS APPROVAL DATE

REGISTERED PROFESSIONAL ENGINEER Les Kubel No. E6503 Exp. 9-30-98 ELECTRICAL STATE OF CALIFORNIA

The State of California or its officers or agents shall not be responsible for the accuracy or completeness of electronic copies of this plan sheet.

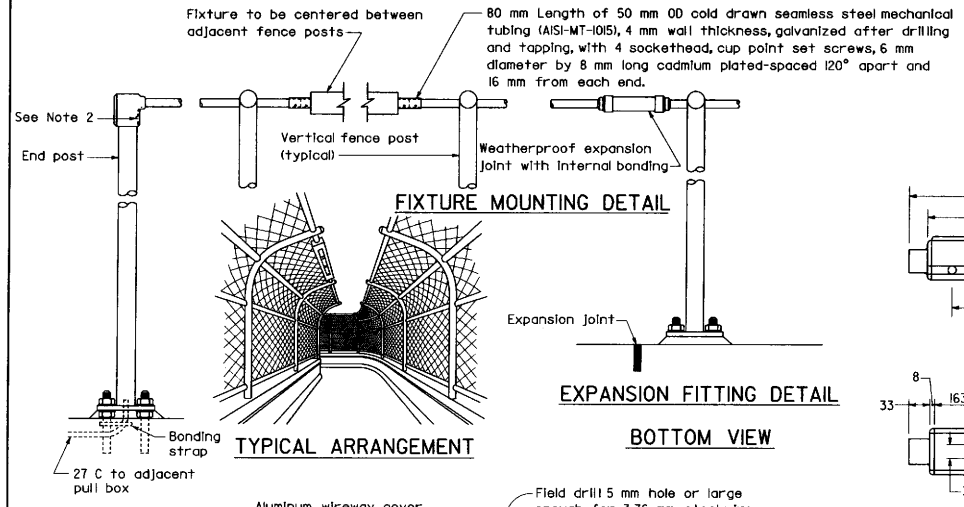

FIXTURE MOUNTING DETAIL

TYPICAL ARRANGEMENT

EXPANSION FITTING DETAIL

END POST DETAIL

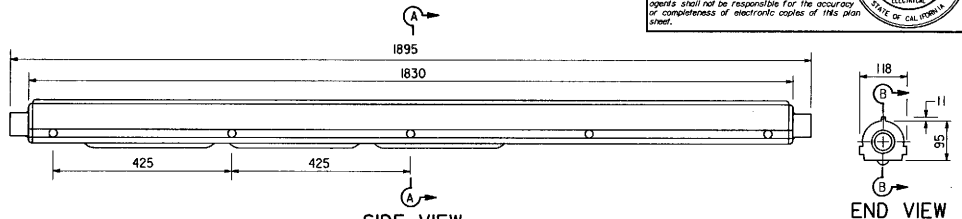

SIDE VIEW

END VIEW

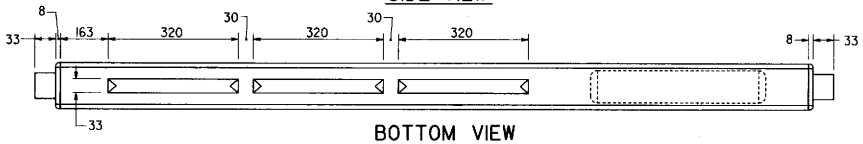

BOTTOM VIEW

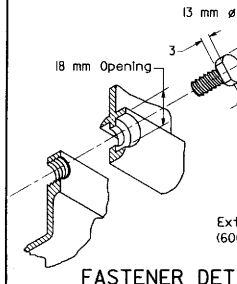

FASTENER DETAIL

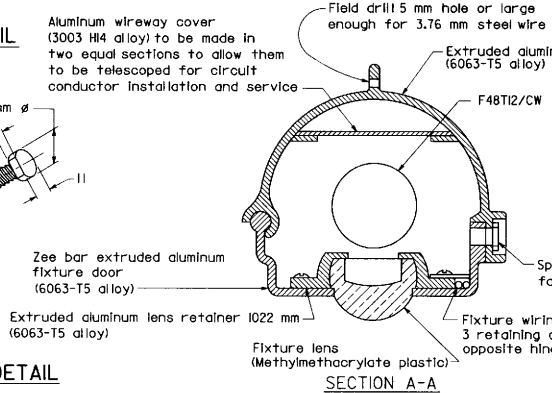

SECTION A-A

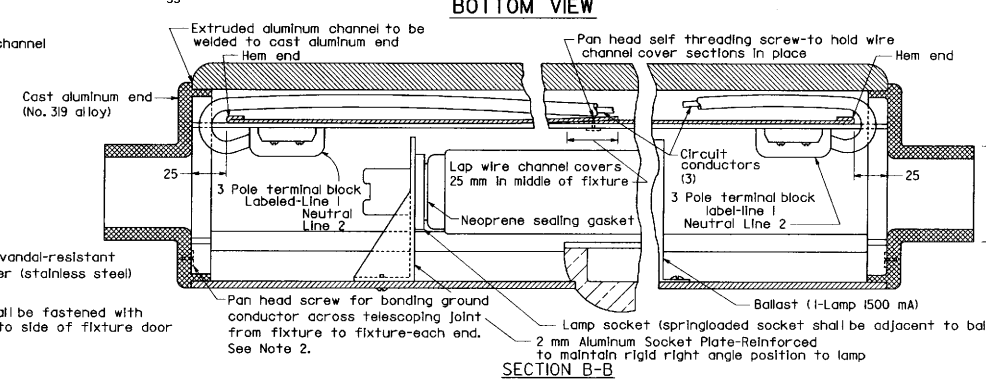

SECTION B-B

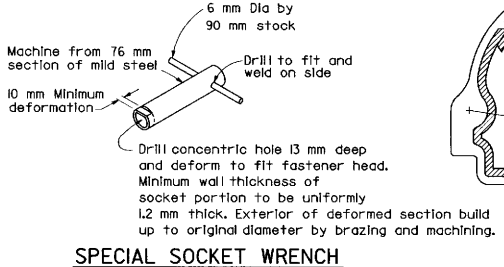

SPECIAL SOCKET WRENCH

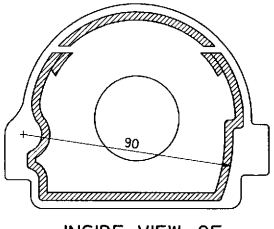

INSIDE VIEW OF END CASTING

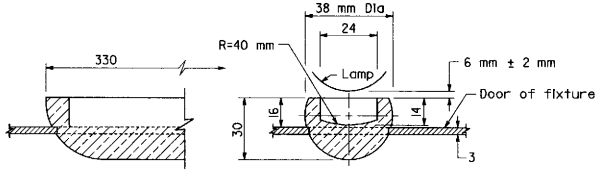

FIXTURE LENS

NOTES

1. The maximum tolerance between door and lens is 0.4 mm. Casting dimensions of shell are nominal and are subject to such tolerances as are consistent with sound foundry practice.
2. Continuous grounding between fixtures and from fixture to end post carrying conductors shall be provided.

STATE OF CALIFORNIA
DEPARTMENT OF TRANSPORTATION

SIGNAL, LIGHTING AND ELECTRICAL SYSTEMS PEDESTRIAN OVERCROSSING FLUORESCENT LIGHTING FIXTURE

NO SCALE

ALL DIMENSIONS ARE IN MILLIMETERS UNLESS OTHERWISE SHOWN

ES-15

STD. PLAN ES-15

Return to Table of Contents

DIST	COUNTY	ROUTE	KILOMETER POST TOTAL PROJECT	SHEET NO.	TOTAL SHEETS

Les Kubel
REGISTERED ELECTRICAL ENGINEER

July 1, 1997
PLANS APPROVAL DATE

REGISTERED PROFESSIONAL ENGINEER Les Kubel No. E6503 Exp. 9-30-98 ELECTRICAL STATE OF CALIFORNIA

The State of California or its officers or agents shall not be responsible for the accuracy or completeness of electronic copies of this plan sheet.

Metric

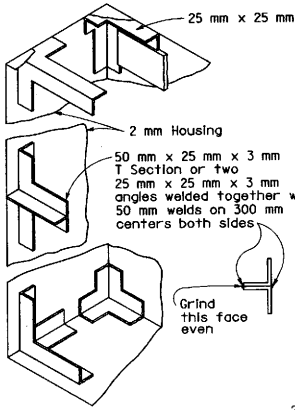

FRAMING DETAILS

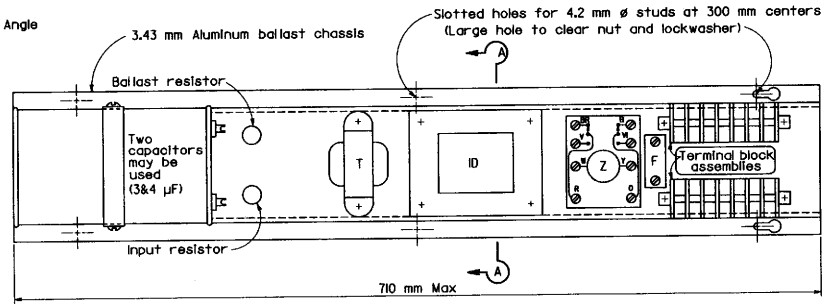

BALLAST CHASSIS COMPONENT LAYOUT

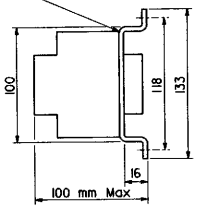

SECTION A-A

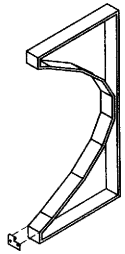

REFLECTOR RIB AND HINGE DETAIL

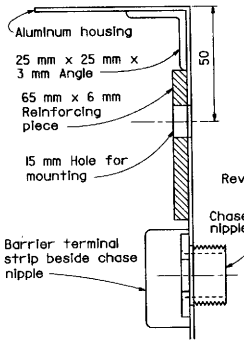

REINFORCING DETAIL

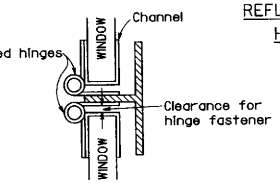

HINGE DETAIL

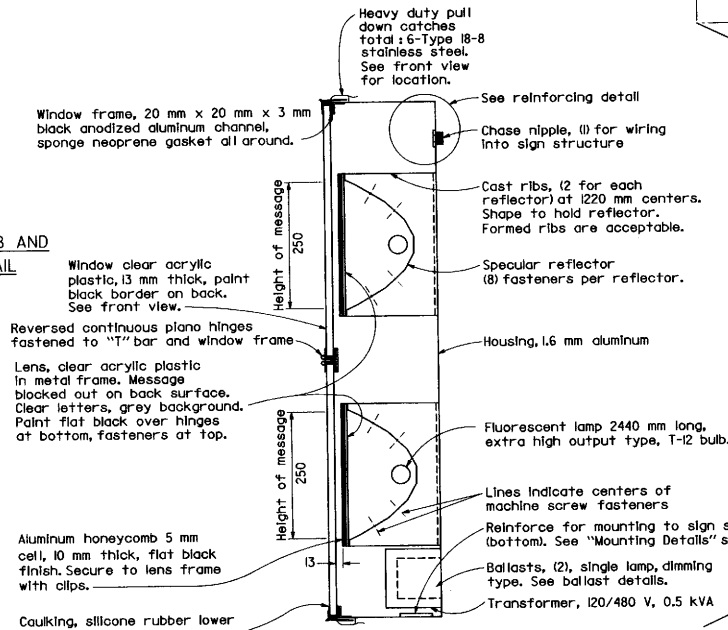

CROSS-SECTION OF SIGN

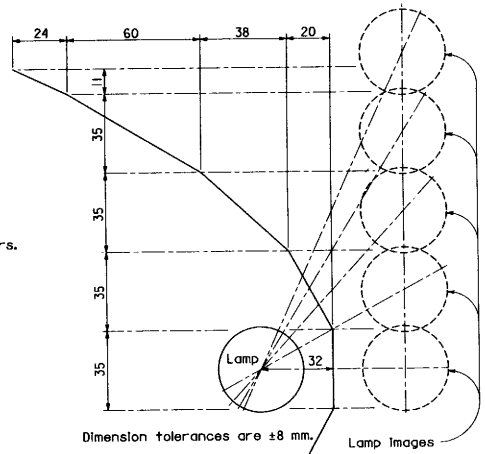

DETAIL OF REFLECTOR SHAPE

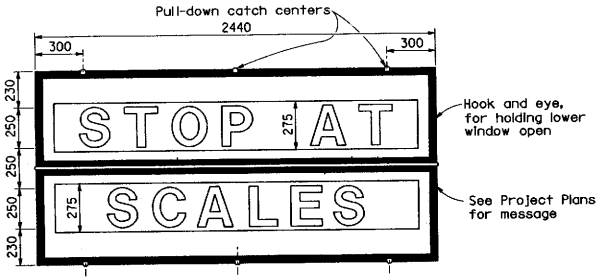

FRONT VIEW OF SIGN UNIT

STATE OF CALIFORNIA
DEPARTMENT OF TRANSPORTATION

SIGNAL, LIGHTING AND ELECTRICAL SYSTEMS EXTINGUISHABLE MESSAGE SIGN 250 mm LETTERS

NO SCALE

ALL DIMENSIONS ARE IN MILLIMETERS UNLESS OTHERWISE SHOWN

ES-27A

Return to Table of Contents

DIST	COUNTY	ROUTE	KILOMETER POST TOTAL PROJECT	SHEET NO.	TOTAL SHEETS

Les Kubel
REGISTERED ELECTRICAL ENGINEER

July 1, 1997
PLANS APPROVAL DATE

REGISTERED PROFESSIONAL ENGINEER
Les Kubel
No. E6503
Exp. 9-30-98
ELECTRICAL
STATE OF CALIFORNIA

The State of California or its officers or agents shall not be responsible for the accuracy or completeness of electronic copies of this plan sheet.

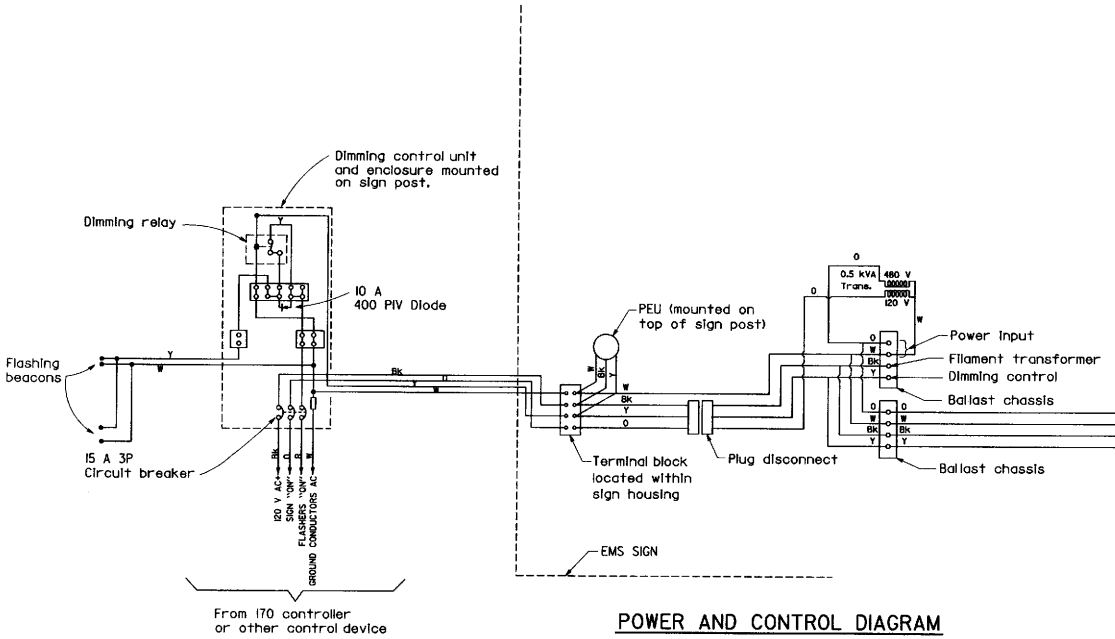

POWER AND CONTROL DIAGRAM

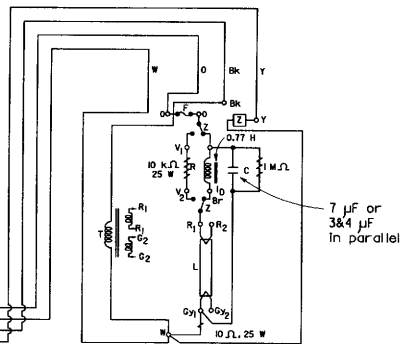

BALLAST WIRING DIAGRAM

CONDUCTOR COLORS
R - Red
O - Orange
Y - Yellw
G - Green
B - Blue
V - Violet
Bk - Black
W - White
Br - Brown
Gy - Gray

WIRING NOTES & SYMBOLS

- o Indicates point on terminal block (Letter at terminal indicates color of wires terminated there).
- T Heater filament transformer, windings R&GY, 4 V at 1.25 A under load.
- C Power factor correction capacitor, 660 V AC rating.
- R Resistor (Ballast) 30 mA (for nighttime dimmed level).
- I_D Inductor (Ballast) 1400 mA (for daytime high level).
- Z Relay, DPDT, for dimming control (120 V Coil).
- F Fuse, 5 A, 600 V, 10 mm (D) x 38 mm (L), non-time delay type.

STATE OF CALIFORNIA
DEPARTMENT OF TRANSPORTATION

SIGNAL, LIGHTING AND ELECTRICAL SYSTEMS EXTINGUISHABLE MESSAGE SIGN 250 mm LETTERS

NO SCALE

ALL DIMENSIONS ARE IN MILLIMETERS UNLESS OTHERWISE SHOWN

ES-27B

Return to Table of Contents

DIST	COUNTY	ROUTE	KILOMETER POST TOTAL PROJECT	SHEET NO.	TOTAL SHEETS

California Metric

REGISTERED CIVIL ENGINEER

July 1, 1997
PLANS APPROVAL DATE

Jeffrey B. Woody
No. C41260
Exp. 3-31-99
CIVIL
STATE OF CALIFORNIA

The State of California or its officers or agents shall not be responsible for the accuracy or completeness of electronic copies of this plan sheet.

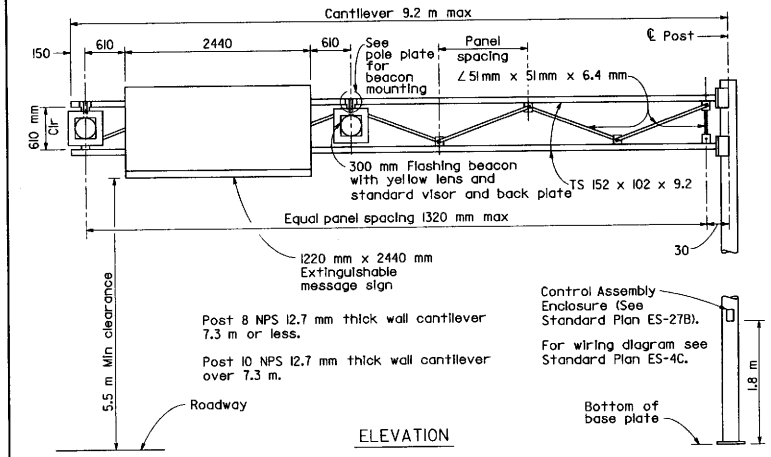

ELEVATION

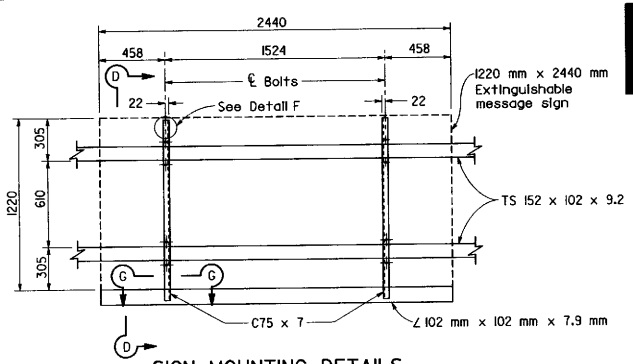

SIGN MOUNTING DETAILS

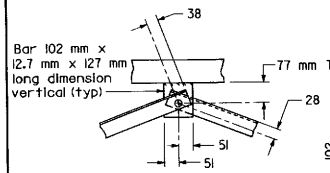

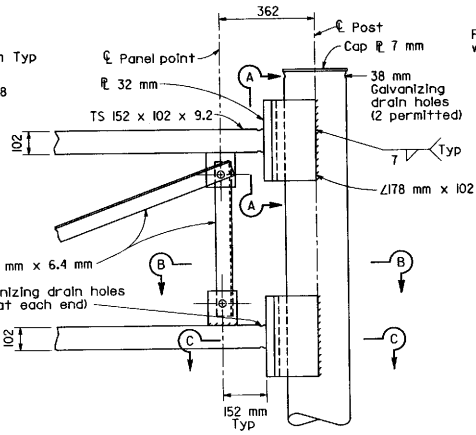

TRUSS FRAME CONNECTION DETAILS

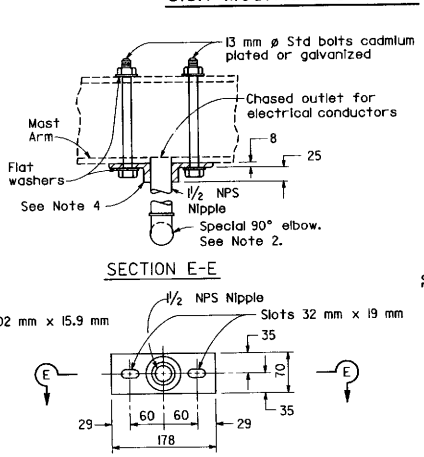

SECTION E-E

ELEVATION

POLE PLATE FOR BEACON MOUNTING

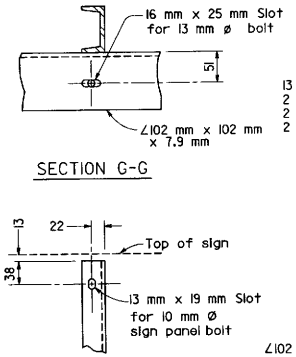

SECTION G-G

DETAIL F

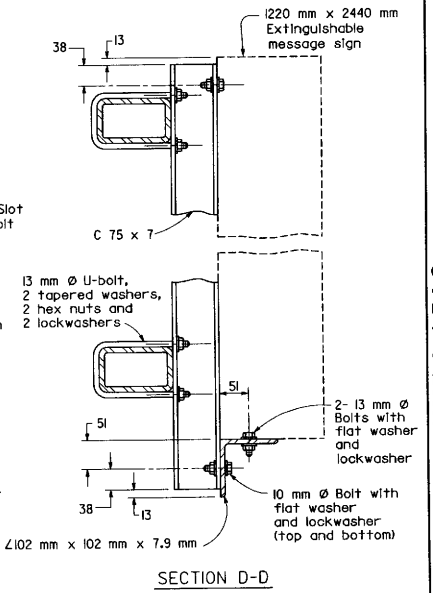

SECTION D-D

NOTES

1. For general notes, base plates, anchor bolts and foundations refer to Lightweight Signs, Post Details and Foundation Details sheets of the Standard Plans.
2. For details of special 90° elbow, see Standard Plans ES-3D.
3. For sign structure dimensions, see Project Plans.
4. Pole plate shall be bronze, aluminum or ductile iron as specified in the Standard Specifications.

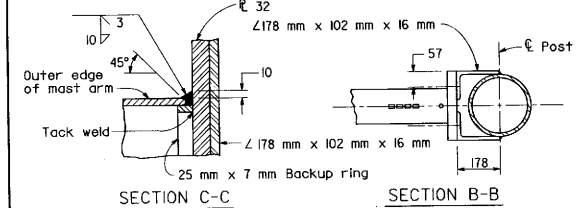

SECTION C-C

SECTION B-B

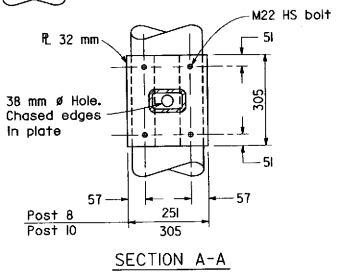

SECTION A-A

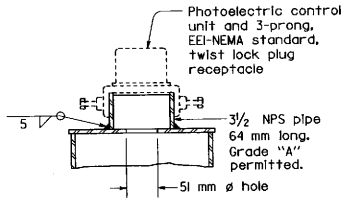

MOUNTING ADAPTER FOR PHOTOELECTRIC CONTROL UNIT

STATE OF CALIFORNIA
DEPARTMENT OF TRANSPORTATION

SIGNAL, LIGHTING AND ELECTRICAL SYSTEMS EXTINGUISHABLE MESSAGE SIGN AND FLASHING BEACONS

NO SCALE

ALL DIMENSIONS ARE IN MILLIMETERS UNLESS OTHERWISE SHOWN

ES-28

STD. PLAN ES-28

Return to Table of Contents

Length of Panel (Meter)	Number of Fixtures (Each)	Fixture Spacing (Millimeters) See Notes #1 and #2	Lamp Size (Watts)	Sign Load (Watts)
1.5	1	750	175	202
1.8		900		
2.1		1050		
2.4		1200		
2.7		1350		
3		1500		
3.4		1650		
3.7		1850		
4		2000		
4.3		2150		
4.6		2300		
4.9		2450		
5.2	2	1300: 2600		404
5.5		1360: 2780		
5.8		1440: 2920		
6.1		1520: 3060		
6.4		1600: 3200		
6.7		1670: 3360		
7		1750: 3500		
7.3		1820: 3660		
7.6		1900: 3800		
8		2000: 4000		
8.2		2050: 4100		
8.5		2120: 4260		
8.8		2200: 4400		
9.2		2300: 4600		
9.5		2370: 4750		
9.8		2450: 4900		
10.1	3	1680: 3370		606
10.4		1730: 3470		
10.7		1780: 3570		
11		1830: 3670		
11.3		1880: 3770		
11.6		1930: 3870		
11.9		1980: 3970		
12.2		2030: 4070		
12.5		2080: 4170		
12.8		2130: 4270		
13.1		2180: 4370		
13.4		2230: 4470		
13.7		2280: 4570		
14		2330: 4670		
14.3		2380: 4770		
14.6		2430: 4870		
15	4	1890: 3740		808
15.3		1920: 3820		
15.6		1950: 3900		
15.9		1980: 3980		
16.2		2010: 4060		
16.5		2070: 4120		
16.8		2100: 4200		
17.1		2160: 4260		
17.4		2190: 4340		
17.7		2250: 4400		
18		2280: 4480		
18.3		2280: 4580		
18.6		2310: 4660		
18.9		2340: 4740		
19.2		2400: 4800		
19.5		2430: 4880		

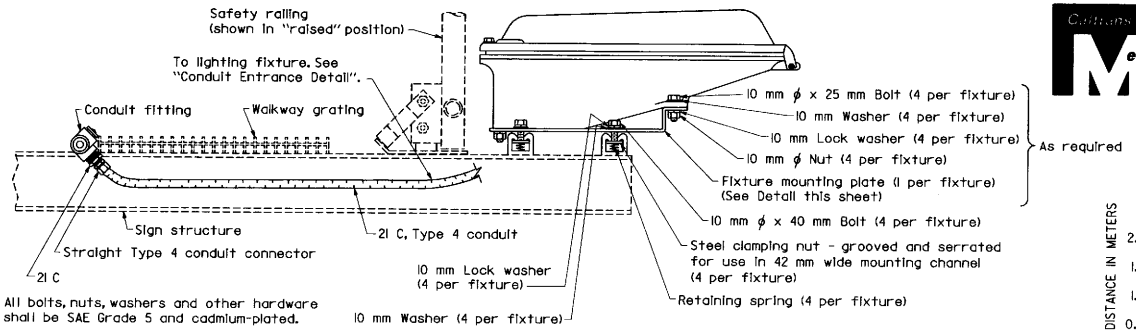

All bolts, nuts, washers and other hardware shall be SAE Grade 5 and cadmium-plated.

LIGHTING FIXTURE MOUNTING DETAIL (TYPICAL)

NOTES

1. The first number listed is the dimension from the edge of the sign panel to the center of the end-most fixture. The second number listed is the dimension between centers of successive fixtures.
2. Where adjacent sign panels are spaced 300 mm or less the combination of these panels (and spaces) shall be considered a single panel.
3. Physical configuration and mounting details may vary from what is shown.

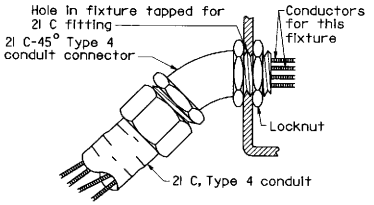

CONDUIT ENTRANCE DETAIL

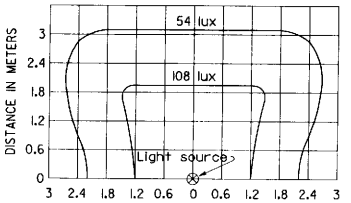

NOTES

1. Curves represent the minimum lux of initial illumination on a 3 m 6 m panel.
2. The lux shown are with the fixture attached to the light fixture mounting channel which places the center of the source 1420 mm in front of panel and 300 mm below the bottom edge.
3. Applicable lamp: 175-W deluxe white mercury, H 39KC - R175/DX rated at approximately 8150 lm.

LIGHTING FIXTURE ISOLUX DIAGRAM

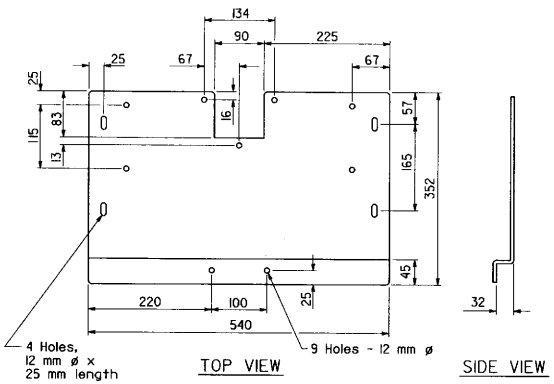

SIGN ILLUMINATION FIXTURE MOUNTING PLATE (TYPICAL)

- Material: 3.42 mm hot-dip galvanized sheet steel after fabrication.
- Left side is symmetrical with right side.

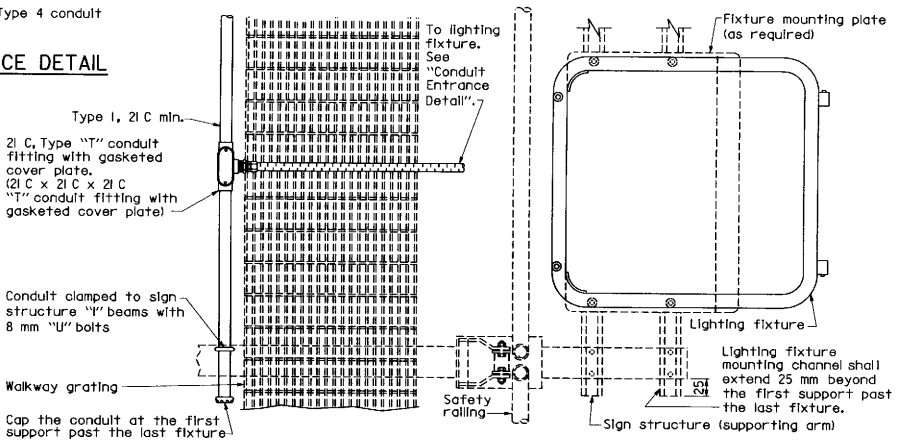

STATE OF CALIFORNIA
DEPARTMENT OF TRANSPORTATION

SIGN ILLUMINATION MERCURY SIGN ILLUMINATION EQUIPMENT

NO SCALE

ALL DIMENSIONS ARE IN MILLIMETERS UNLESS OTHERWISE SHOWN

ES-29

DIST	COUNTY	ROUTE	KILOMETER POST TOTAL PROJECT	SHEET NO.	TOTAL SHEETS

REGISTERED ELECTRICAL ENGINEER

July 1, 1997
PLANS APPROVAL DATE

Les Kubel No. E6503 Exp. 9-30-98 ELECTRICAL — REGISTERED PROFESSIONAL ENGINEER — STATE OF CALIFORNIA

The State of California or its officers or agents shall not be responsible for the accuracy or completeness of electronic copies of this plan sheet.

STD. PLAN ES-29

Return to Table of Contents

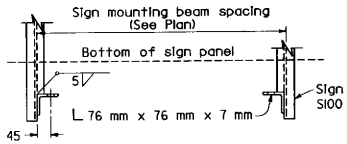

FRONT VIEW

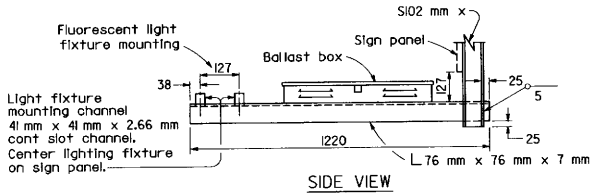

SIDE VIEW

LIGHT FIXTURE MOUNTING DETAIL

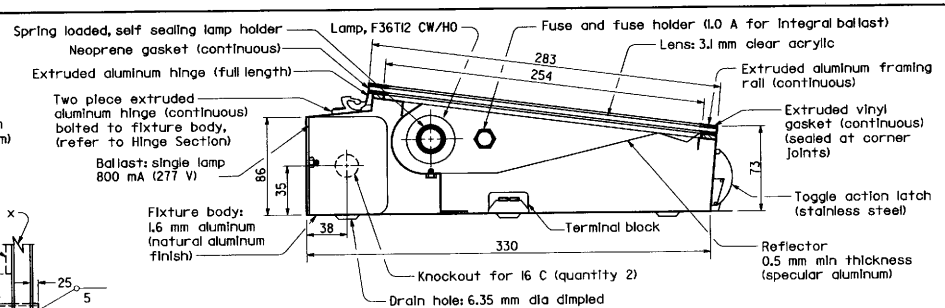

SECTION-LIGHTING FIXTURE

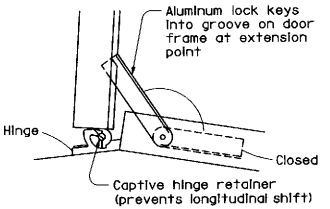

HINGE SECTION

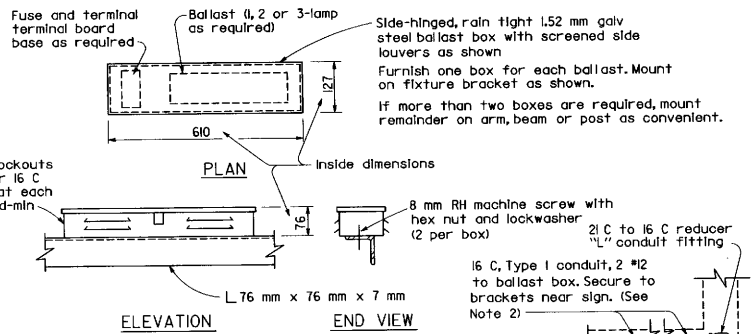

BALLAST BOX DETAILS

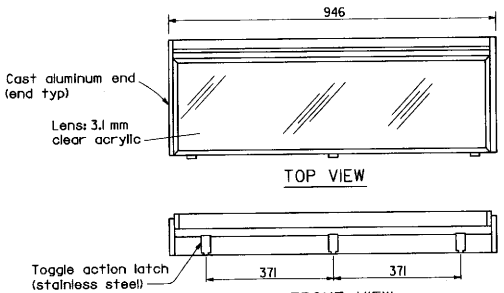

SIGN LOAD (WATTS) AND FUSING		
1	Lamp and ballast - 75 W	1 A
2	Lamps and ballast - 150 W	2.5 A
3	Lamps and ballast - 215 W	3 A

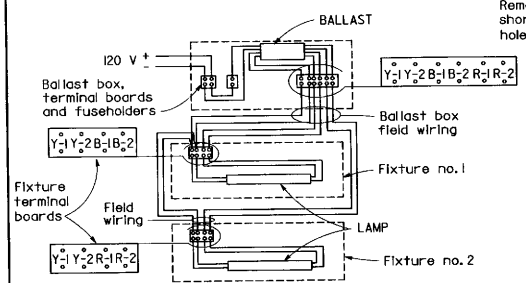

TYPICAL FIXTURE WIRING DIAGRAM (TWO LAMP)

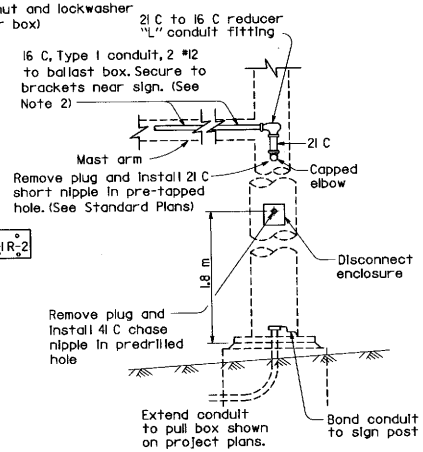

TYPICAL WIRING AND SIGN SWITCH INSTALLATION DETAILS

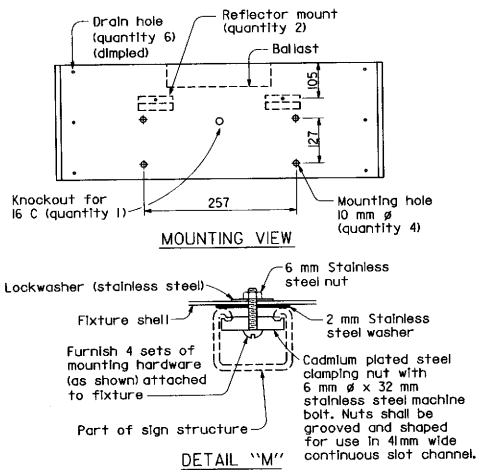

FIXTURE MOUNTING ON CONTINUOUS SLOT CHANNEL

NOTES

1. Wiring between ballast box and nearest fixture and between fixtures shall be run in 16 C, Type 4 conduit.
2. Conduit shall be secured to nearest member using one-hole galvanized malleable iron or steel straps at 1.5 m maximum centers and brass machine screws tapped into the member.
3. Ballasts and terminal boards shall be marked with legible symbols. Conductors shall be tagged and their identification marked on the corresponding terminal on the terminal board as shown on the Typical Fixture Wiring Diagram. An alternative cover design shall be submitted for approval.
4. Ballast shall be one, two or three lamp types as required, rated at 800 mA.
5. Each ballast shall be fused with 32 mm x 6 mm slow-blow glass tube fuse.
6. Fuseholder shall be a panel mounted type, with screw type finger knob.
7. At the option of the contractor, the fixture may be supplied with an integral ballast. The ballast box will not be required when fixtures with integral ballasts are supplied.

DIST	COUNTY	ROUTE	KILOMETER POST TOTAL PROJECT	SHEET NO.	TOTAL SHEETS

Les Kubel
REGISTERED ELECTRICAL ENGINEER

July 1, 1997
PLANS APPROVAL DATE

REGISTERED PROFESSIONAL ENGINEER Les Kubel No. E6503 Exp. 9-30-98 ELECTRICAL STATE OF CALIFORNIA

The State of California or its officers or agents shall not be responsible for the accuracy or completeness of electronic copies of this plan sheet.

Caltrans Metric

STATE OF CALIFORNIA
DEPARTMENT OF TRANSPORTATION

SIGN ILLUMINATION
915 mm FLUORESCENT SIGN ILLUMINATION EQUIPMENT

NO SCALE

ALL DIMENSIONS ARE IN MILLIMETERS UNLESS OTHERWISE SHOWN

ES-30

STD. PLAN ES-30

Return to Table of Contents

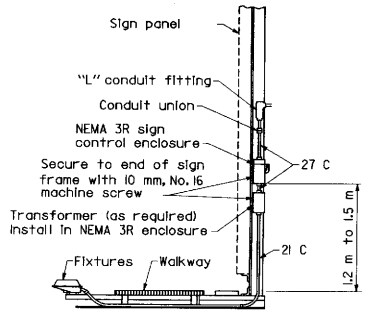

TYPICAL DETAIL BRIDGE MOUNTED SIGN

Sign control enclosure shall be readily accessible from the sign walkway.

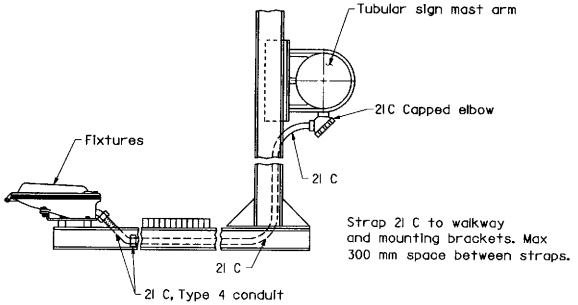

TYPICAL CONDUIT INSTALLATION FOR TUBULAR OVERHEAD SIGNS

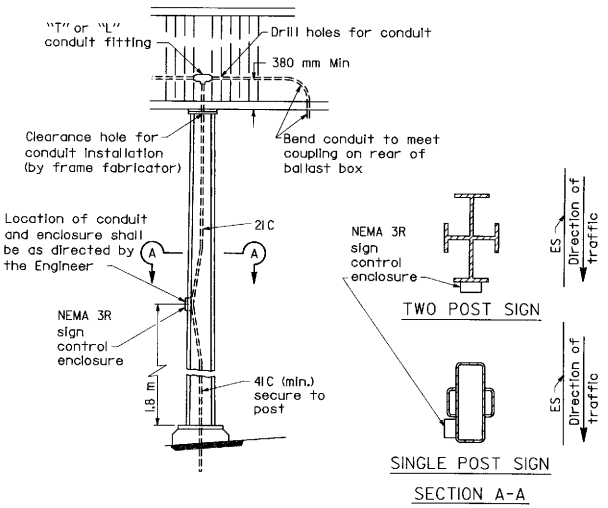

TYPICAL CONDUIT AND SIGN CONTROL INSTALLATION FOR BOX BEAM POST

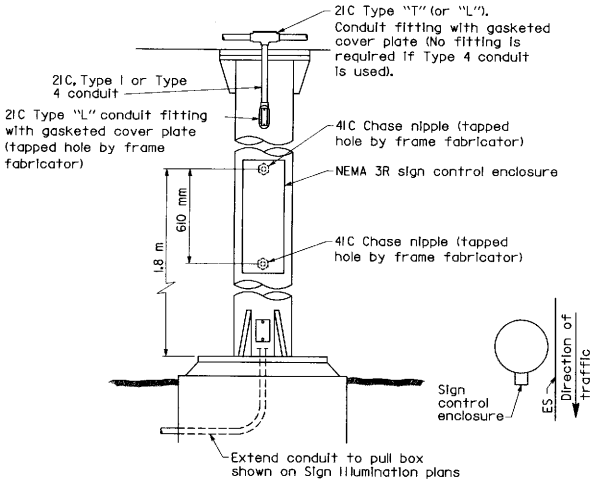

TYPICAL CONDUIT AND SIGN CONTROL INSTALLATION FOR ROUND POST

NOTES

1. Type 4 conduit shall be secured to the nearest walkway bracket using one-hole galvanized malleable iron or steel straps and brass machine screws tapped into the bracket.
2. See Standard Plans for Overhead Signs and Frame Juncture Details for photoelectric unit installation.
3. Enclosures and straps shall be secured by 6 mm maximum size screws.

DIST	COUNTY	ROUTE	KILOMETER POST TOTAL PROJECT	SHEET NO.	TOTAL SHEETS

Les Kubel
REGISTERED ELECTRICAL ENGINEER

July 1, 1997
PLANS APPROVAL DATE

REGISTERED PROFESSIONAL ENGINEER
Les Kubel
No. E6503
Exp. 9-30-98
ELECTRICAL
STATE OF CALIFORNIA

The State of California or its officers or agents shall not be responsible for the accuracy or completeness of electronic copies of this plan sheet.

STATE OF CALIFORNIA
DEPARTMENT OF TRANSPORTATION

SIGN ILLUMINATION
SIGN ILLUMINATION EQUIPMENT

NO SCALE

ALL DIMENSIONS ARE IN MILLIMETERS UNLESS OTHERWISE SHOWN

ES-32A

STD. PLAN ES-32A

Return to Table of Contents

DIST	COUNTY	ROUTE	KILOMETER POST TOTAL PROJECT	SHEET NO.	TOTAL SHEETS

California Metric

Les Kubel
REGISTERED ELECTRICAL ENGINEER

July 1, 1997
PLANS APPROVAL DATE

REGISTERED PROFESSIONAL ENGINEER Les Kubel No. E6503 Exp. 9-30-98 ELECTRICAL STATE OF CALIFORNIA

The State of California or its officers or agents shall not be responsible for the accuracy or completeness of electronic copies of this plan sheet.

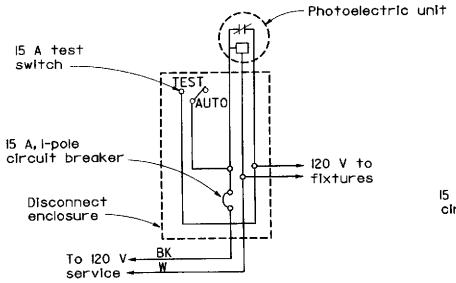

TYPE SC1 SIGN CONTROL

For 120 V unswitched sign circuit with no more than 4 mercury fixtures

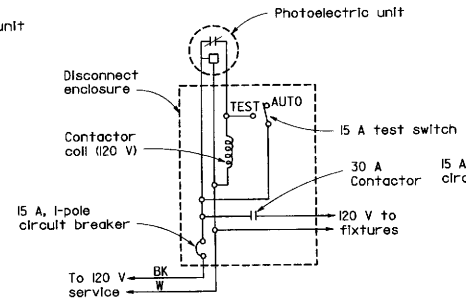

TYPE SC2 SIGN CONTROL

For 120 V Unswitched Sign Circuit

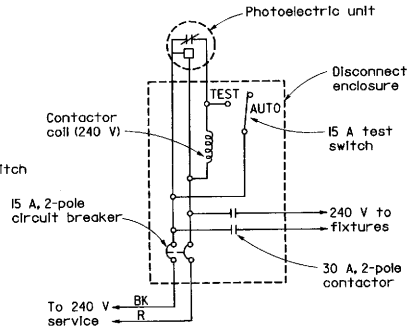

(For 240 V Unswitched Sign Circuit)

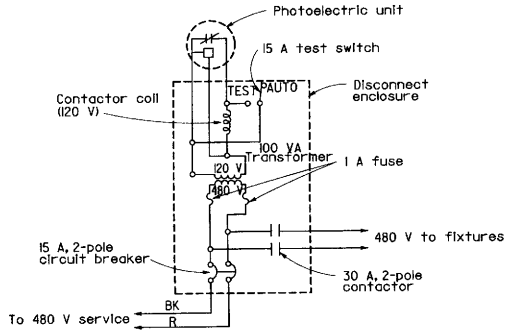

(For 480 V Unswitched Sign Circuit)

TYPE SC3 SIGN CONTROL

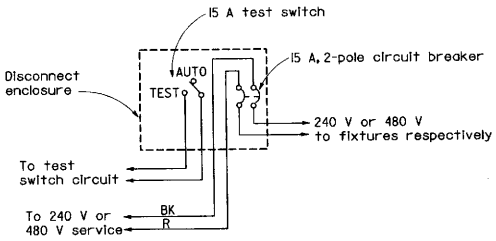

TYPE SC4 SIGN CONTROL

For 240 V or 480 V switched sign circuit
See Note 4 for type SC4A

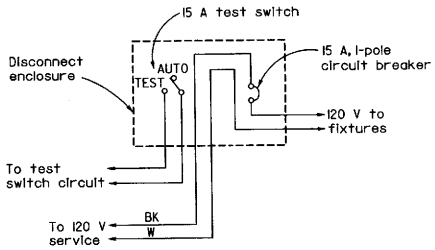

TYPE SC5 SIGN CONTROL

For 120 V Switched Sign Circuit
See Note 4 for type SC5A

NOTES: (FOR SIGN CONTROLS)

1. The ballast voltages of fixtures shall match line service voltages.
2. Voltage ratings of sign control equipment shall conform to the service voltages indicated on the plans.
3. Terminal strip shall be provided for wiring to fixtures. Separate pair of terminals shall be provided for each fixture.
4. Types SC4A and SC5A are similar to Types SC4 and SC5 respectively except test switch and wiring are not required.

STATE OF CALIFORNIA
DEPARTMENT OF TRANSPORTATION

SIGN ILLUMINATION
SIGN ILLUMINATION CONTROL

NO SCALE

ALL DIMENSIONS ARE IN MILLIMETERS UNLESS OTHERWISE SHOWN

ES-32B

STD. PLAN ES-32B

Return to Table of Contents

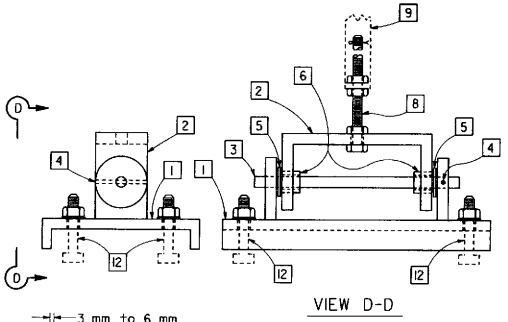

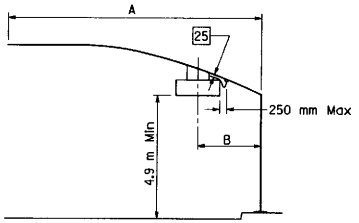

SIGN PLACEMENT

A	B*	
m	1.8-m sign	2.4-m sign
6.1	2.4 m	2.7 m
7.6	2.8 m	3.1 m
9.1	2.9 m	3.2 m
10.7	3.2 m	3.5 m
12.2	3.8 m	4.1 m
13.7	3.8 m	4.1 m
15.2	3.8 m	4.1 m
16.8	3.8 m	4.1 m

SIGN PLACEMENT

*For 2.4 m sign, poles of 129 km/h wind velocity shall be used.

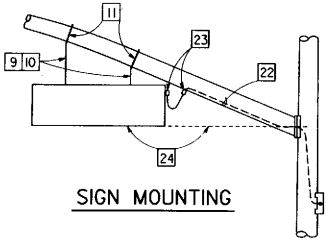

SIGN MOUNTING

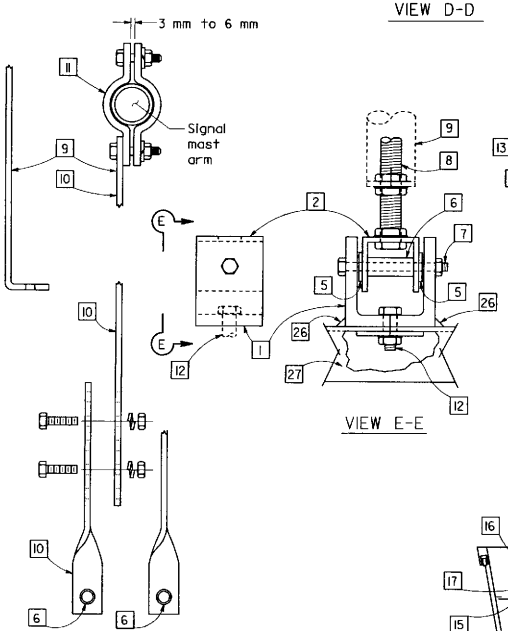

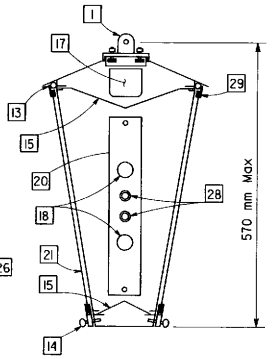

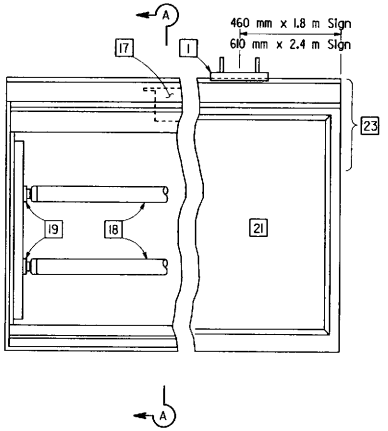

TYPE A SIGN

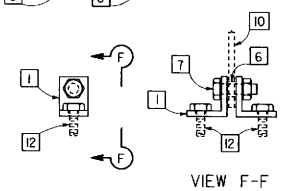

MOUNTING ASSEMBLY OPTIONS

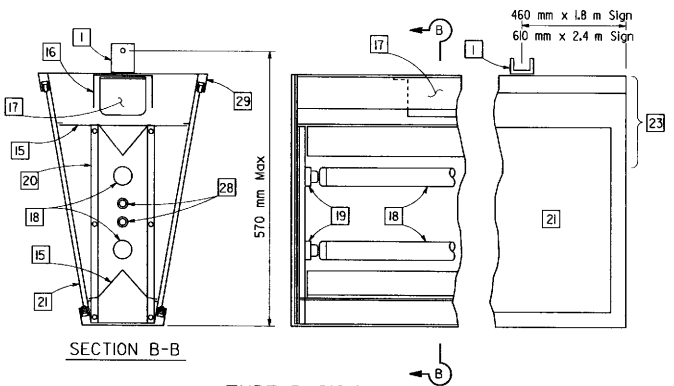

TYPE B SIGN

1. LOWER MOUNTING ASSEMBLY, WITH GASKET.
2. UPPER MOUNTING ASSEMBLY.
3. ROD, 13 mm, STAINLESS STEEL.
4. LOCKING PIN, STEEL.
5. FLAT WASHER, STAINLESS STEEL.
6. BUSHING, BRONZE.
7. BOLT, 6 mm ø STAINLESS STEEL, WITH SELF-LOCKING NUT.
8. BOLT, 13 mm ø, STAINLESS STEEL, WITH THREE NUTS, AND COTTER KEY. LENGTH AS REQUIRED FOR PROPER MOUNTING OF SIGN.
9. BRACKET, 6 mm x 40 mm MINIMUM. LENGTH VARIABLE.
10. BRACKET, 2-PIECE ADJUSTABLE. 6 mm x 40 mm MINIMUM. TWO 13 mm ø HEXAGON HEAD BOLTS WITH NUTS AND LOCKWASHERS.
11. CLAMP, 2-PIECE, SHAPED TO FIT MASTARM. 6 mm x 40 mm MINIMUM. TWO 13 mm ø HEXAGON HEAD BOLTS WITH NUTS AND LOCKWASHERS.
12. MOUNTING BOLT, 6 mm ø MINIMUM, WITH NUT AND LOCKWASHER, OR SELF-LOCKING NUT AND COTTER KEY.
13. CONTINUOUS HINGE.
14. THUMB SCREW, 16 mm ø . MINIMUM TWO PER SIDE ON 1220 mm CENTERS.
15. REFLECTOR, 1 mm MINIMUM THICKNESS.
16. ALUMINUM STIFFENER.
17. FLUORESCENT BALLAST (2 REQUIRED).
18. LAMP, F72T12CW FOR 1.8-m SIGN; F96T12CW FOR 2.4-m SIGN
19. LAMP HOLDER.
20. LAMP HOLDER TURRET.
21. SIGN PANEL, 380 mm MINIMUM HEIGHT. MESSAGE IS SHOWN ELSEWHERE.
22. CORD, 16/3 TYPE SJT. CONTINUOUS FROM SIGN TERMINAL BLOCK TO SIGNAL HEAD MOUNTING TERMINAL COMPARTMENT. FORM A 300 mm DRIP LOOP BETWEEN SIGN AND MAST ARM.
23. CORD CONNECTOR. 90° ANGLE AT SIGN. LOCATE IN UPPER 1/3 OF SIGN. STRAIGHT AT MAST ARM. DRILL AND TAP BOTTOM OF MAST ARM.
24. ADJUST FIXTURE LEVEL AND NO LOWER THAN CENTER OF SIGNAL ARM CONNECTION.
25. APPROXIMATE CLEARANCE, 25 mm.
26. 6 mm FILLET WELD, 32 mm LONG.
27. SIGN FRAME.
28. FUSE HOLDER AND FUSE.
29. CLOSED CELL NEOPRENE GASKET (CONTINUOUS).

DIST	COUNTY	ROUTE	KILOMETER POST TOTAL PROJECT	SHEET NO.	TOTAL SHEETS

REGISTERED ELECTRICAL ENGINEER

July 1, 1997
PLANS APPROVAL DATE

Les Kubel No. E6503 Exp. 9-30-98 ELECTRICAL

The State of California or its officers or agents shall not be responsible for the accuracy or completeness of electronic copies of this plan sheet.

STATE OF CALIFORNIA
DEPARTMENT OF TRANSPORTATION

SIGN ILLUMINATION INTERNALLY ILLUMINATED STREET NAME SIGN

NO SCALE

ALL DIMENSIONS ARE IN MILLIMETERS UNLESS OTHERWISE SHOWN

ES-33

Return to Table of Contents

POST TYPE	POLE DATA				BASE PLATE DATA				"d" 610 mm ø CIDH Pile (m)	STRUCT. STEEL IN kg PLUS 3.5% GALV.
	HEIGHT "h" (m)	MIN O. D. (mm)		THICKNESS (mm)	"C" (mm)	THICKNESS (mm)	ANCHOR BOLTS (mm)			
		BASE	TOP				SIZE	BC=BOLT CIRCLE		
CCTV 25	7.62	187	98	4.55	305	25.4	25.4 x 920 x 102	267	1.83	180
CCTV 30	9.14	203	98	4.55	305	25.4	25.4 x 920 x 102	279	2.13	215
CCTV 35	10.67	219	98	4.55	305	25.4	25.4 x 920 x 102	305	2.13	250
CCTV 40	12.19	238	98	4.55	305	25.4	32 x 920 x 102	330	2.13	295
CCTV 45	13.72	254	98	4.55	305	25.4	32 x 920 x 102	343	2.44	340

California Metric

DIST	COUNTY	ROUTE	KILOMETER POST TOTAL PROJECT	SHEET NO.	TOTAL SHEETS

REGISTERED CIVIL ENGINEER

July 1, 1997
PLANS APPROVAL DATE

REGISTERED PROFESSIONAL ENGINEER Jeffrey B. Woody No. C41260 Exp. 3-31-99 CIVIL STATE OF CALIFORNIA

The State of California or its officers or agents shall not be responsible for the accuracy or completeness of electronic copies of this plan sheet.

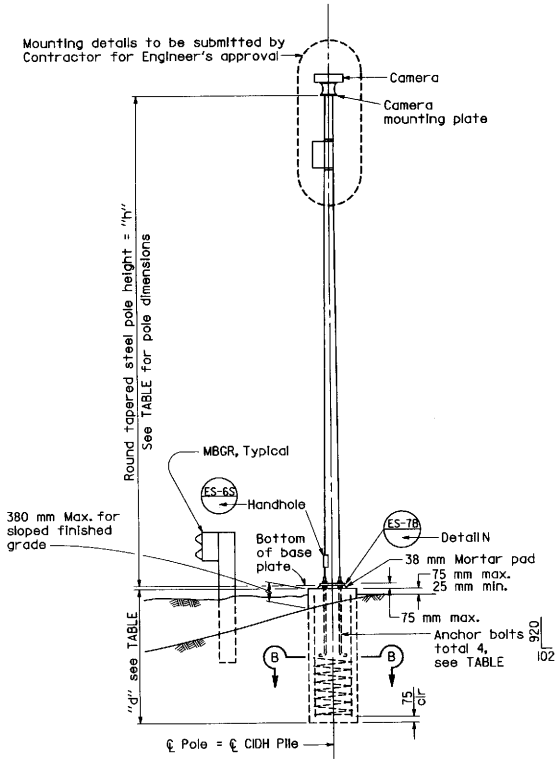

ELEVATION

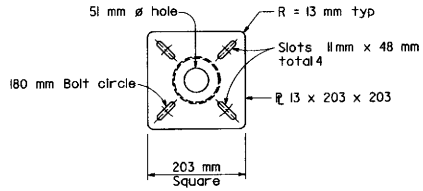

CAMERA MOUNTING PLATE

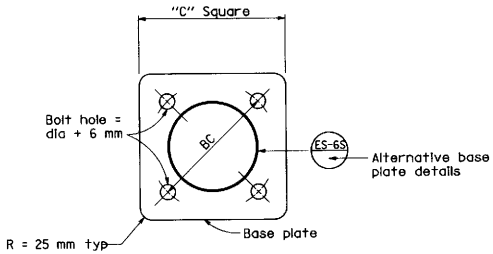

BASE PLATE

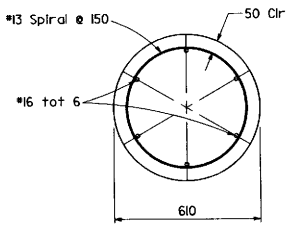

SECTION B-B

GENERAL NOTES:

SPECIFICATIONS
DESIGN : AASHTO specifications for the design and construction of structural supports for highway signs, dated 1994.

Loading
WIND LOADINGS : 129 km/h AASHTO
Unit Stresses
STRUCTURAL STEEL : fy = 331 MPa tapered steel tube (Pole)
fy = 248 MPa unless noted otherwise noted

Anchor bolts = A307
REINFORCED CONCRETE : f'c = 22.4 MPa
fy = 276 MPa

NOTES:

1. The Contractor shall verify all controlling field dimensions before ordering or fabricating any material.
2. All steel shall be galvanized after fabrication.
3. During pole erection, the post shall be raked as necessary with the use of leveling nuts to provide a plumb pole axis.

STATE OF CALIFORNIA
DEPARTMENT OF TRANSPORTATION

CLOSED CIRCUIT TELEVISION POLE DETAILS

NO SCALE

ALL DIMENSIONS ARE IN MILLIMETERS UNLESS OTHERWISE SHOWN

ES-34A

STD. PLAN ES-34A

Return to Table of Contents

POLE EXTENSION TYPE	POLE DATA			
	HEIGHT "H" (m)	MIN O. D. (mm)		THICKNESS (mm)
		BASE	TOP	
CCTV 5	1.5	116	98	4.55
CCTV 10	3.0	133	98	4.55
CCTV 15	4.5	151	98	4.55

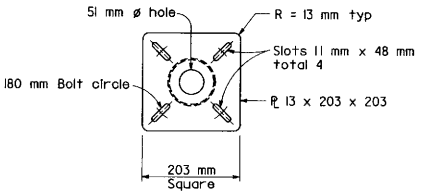

CAMERA MOUNTING PLATE

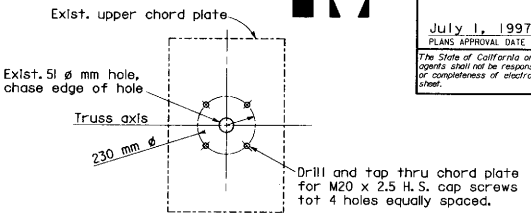

UPPER CHORD PLATE S7

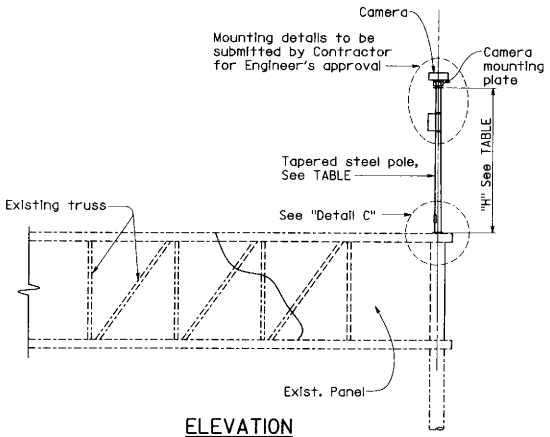

ELEVATION

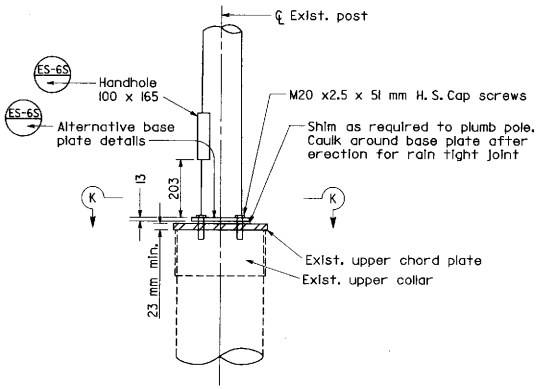

DETAIL A

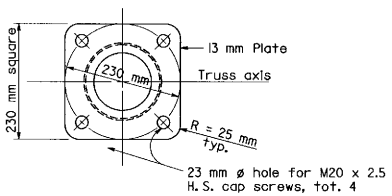

SECTION K-K

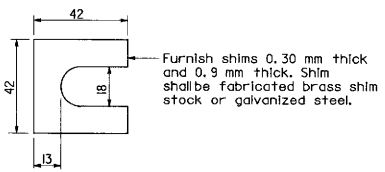

SHIM DETAIL

GENERAL NOTES:

SPECIFICATIONS
DESIGN : AASHTO specifications for the design and construction of structural supports for highway signs, dated 1994.

Loading
WIND LOADINGS : 129 km/h AASHTO
Unit Stresses
STRUCTURAL STEEL : fy = 331MPa tapered steel tube (Pole)
fy = 248 MPa unless noted otherwise noted

NOTES:

1. The Contractor shall verify all controlling field dimensions before ordering or fabricating any material.
2. All steel shall be galvanized after fabrication.
3. Bolt hole locations may vary at the discreation of the Engineer.
4. ¾" dia. H.S. Cap Screw may be substitued for M20x2.5 H.S. Cap Screw.

DIST	COUNTY	ROUTE	KILOMETER POST TOTAL PROJECT	SHEET NO.	TOTAL SHEETS

Caltrans Metric

REGISTERED CIVIL ENGINEER
July 1, 1997
PLANS APPROVAL DATE

REGISTERED PROFESSIONAL ENGINEER Jeffrey B. Woody No. C41260 Exp. 3-31-99 CIVIL STATE OF CALIFORNIA

The State of California or its officers or agents shall not be responsible for the accuracy or completeness of electronic copies of this plan sheet.

STATE OF CALIFORNIA
DEPARTMENT OF TRANSPORTATION

CLOSED CIRCUIT TELEVISION POLE DETAILS-OVERHEAD SIGN MOUNTED

NO SCALE

ALL DIMENSIONS ARE IN MILLIMETERS UNLESS OTHERWISE SHOWN

ES-34B

STD. PLAN ES-34B

Return to Table of Contents

INDEX

-A-

Page No.

Abbreviations and Symbols, General (A10A, A10B) 1, 2
Abbreviations and Symbols, Planting and Irrigation(H1, H2) 122, 123
Abbreviations and Symbols, Traffic Signal and Lighting (ES-1A, ES-1B) 234, 235
Abutment, Excavation and Backfill (A62C) 16
Access Door, Bridge (B0-13) 148
Access Opening, Bridge Utility Detail (B7-11) 173
Accessible Parking (A90) 63
Anchor Assembly
  Overside Drains (D87A) 95
  Guard Railing (A77G, A77I) 42, 45
  Thrie Beam Barrier (A78E) 52
Arch Culvert
  Concrete (D95) 107
  Construction Load On (D88) 98
  Endwalls, Reinforced Concrete (D86C) 94
  Headwalls, Reinforced Concrete (D86C) 94
  Structural Plate (B14-1) 182
  Warped Wingwalls, Reinforced Concrete (D86C) 94
Asphalt Concrete Overside Drain (D87B) 96

-B-

Backfill and Excavation (A62A, A62B, A62C, A62D, A62E, A62F) 14-19
Backfill, Permeable or Pervious, Bridge (B0-3) 146
Balanced Lightweight Overhead Signs (See Overhead Signs)
Banding of Conductor Ends (ES-13) 295
Barricade, Portable (A73C) 22
Barbed Wire, Fence (A86) 60
Barriers
  Concrete, Type 50 Series (A75A, A75B) ... 25, 26
  Concrete, Type 60 Series (A76A thru A76I) 27- 35
  Concrete, Type 25 (B11-53) 179
  Concrete, Type 26 (B11-54) 180
  Thrie Beam (A78A, A78B) 48, 49
Bedding, Pipe and Pipe Arches (A62D, A62F) 17, 19
Box Beam Overhead Signs - (See Overhead Signs)
Box Girder
  Details (B7-1) 169
  Utility Opening (B7-10) 172
Bridge
  Abutment, Excavation & Backfill (A62C) 16
  Access Door, Bridge (B0-13) 148
  Access Openings (B7-11) 173
  Alternative Stirrups (B0-5) 147
  Bumper, Temporary (B0-1) 145
  Cast-In-Place Prestressed Girder Details (B8-5) 174

Page No.

Bridge (Cont'd)
  Deck Construction Joints (B0-5) 147
  Deck, Transverse Reinforcement (B0-5) 147
  Drain Details, Types A, B, Area (B7-5) 170
  Drain Types D-1 & D-2 (B7-6) 171
  Electrical Details, Structure Installations (ES-7A, ES-7B, ES-7C, ES-7D, ES-7E, ES-7F) 283-288
  Excavation and Backfill - Limits of Payment (A62B, A62C) 15, 16
  Girder, Reinforcement (B0-5) 147
  Joint Seal Details (B6-21) 168
  Polystyrene, Vertical and Horizontal Protection of (B0-13) 148
  Soffit Luminaire Installation (ES-7E, ES-7F) 287, 288
  Surcharge (A62B) 15
  Temporary Bumper (B0-1) 145
  Wall Expansion Joint (B0-3) 146
  Waterstop (B0-1, B0-3) 145, 146
  Weakened Plane Joint (B0-3) 146
  Weep Hole (B0-3) 146

-C-

Cabinet, Controller, Details of (ES-4A, ES-4B, ES-4C) 247-249
Cable Anchor Assembly,Guard Railing (Breakaway) (A77G) 42
Cable Anchor Assembly, Guard Railing and Barrier End Anchors (A77I) 45
Cable Railing, Retaining Wall (B11-47) 176
Cantilever Flashing Beacon Details (ES-9A, ES-9B) 290, 291
Cast-In-Drilled-Hole Concrete Pile 400 mm (B2-3) 149
Cast-In-Drilled-Hole Concrete Pile for Overhead Signs (S13,S20B, S39) 204, 213, 214
Chain Link Fence (A85) 59
Chain Link Railing (B11-7) 175
Chain Link Railing Type 7 (B11-52) 178
Channelizers (A73C) 22
Closed Circuit Television Pole Details (ES-34A, ES-34B) 306, 307
Communication Conduit In/On Bridges (B14-3) 183
Concrete Barrier Type 50 Series (A75A, A75B) 24, 25
Concrete Barrier Type 60 Series (A76A thru A76I) 27-35
Concrete Barrier Type 25 (B11-53) 179
Concrete Barrier Type 26 (B11-54) 180
Concrete Pavement Joints (A35A) 12
Concrete Pile
  400 mm Cast-In-Drilled-Hole (B2-3) 149
  Class 400 & 625 (B2-5) 150
  Class 400C & 625C (B2-6) 151

Page No.

Concrete Piles (Cont'd)
Class 900 & 900C (B2-8) 152
Load Test Pile
Details (B2-9, B2-10, B2-11) 153, 154, 155
Concrete Slope Protection (B13-1) 181
Conduit, Installation Details
Bridge (B14-3, ES-7C) 183, 285
Construction Load on Culvert (D88) 98
Consruction Project funding Identification
Signs (T7) 135
Controller Cabinets, Details of
(ES-4A, ES-4B, ES-4C) 247-249
Corrugated Metal Pipe Coupling Band Details
Standard and Positive Joints
(D97A, D97B, D97C, D97D, D97E,
D97F, D97G) 108-114
Counterfort Retaining Walls
Type 3 (B3-5) 160
Type 4 (B3-6) 161
Coupling Band Details, Corrugated Metal Pipe
(D97A, D97B, D97C, D97D, D97E,
D97F, D97G) 108-114
Covers, Pipe Inlets (D75) 81
Crash Cushions, Sand Filled (A81) 57
Crash Cushions, Temporary, Sand Filled
(T1, T2) 130, 131
Crib Walls
Excavation and Backfill (A62B) 15
Reinforced Concrete
Types A, B, C, D, E , F
Construction Details (C7A, C7B,
C7C C7D, C7E) ..... 64 - 68
Design Data (C7F, C7G) 69, 70
Steel
Construction Details (C8A) 71
Design Data (C8B, C8C) 72, 73
Timber Types A, B, C, D
Construction Details (C9A) 74
Design Data (C9B) 75
Cross Drain Interceptor Details (D99D) 121
Curbs (A87) 61
Curb Ramp Details (A88) 62
Culvert
Box, Cast-In-Place Reinforced Concrete
General Details (D80, D81) 87, 88
Miscellaneous Details (D82) 89
Wingwalls
Types A, B, C (D84) 90
Types D, E (D85) 91
Warped (D86A) 92
Concrete Arch
General Details (D95)) 107
Headwalls, Endwalls
and Warped Wingwalls (D86C) 94
Construction Load on (D88) 98
Excavation & Backfill Details
(A62D, A62E, A62F) 17-19
Flared End Sections (D94A, D94B) 105, 106
Pipe
Headwalls and Endwalls
Straight and "L" (D89) 100

Page No.

Culvert
Pipe (Cont'd)
Headwalls, Endwalls and Wingwalls
Types A, B, C (D90) 101
Warped Wingwalls (D86B) 93

-D-

Debris Rack Cage (D93C) 104
Deck Drain Types A, B, Area (B7-5) 170
Deck Drain Types D-1, D-2 (B7-6) 171
Delineators (A73C) 22
Depressions, Gutter (D78) 85
Detectors, Traffic
Loop (ES-5A, ES-5B, ES-5C) 251-253
Magnetic (ES-5C) 241
Magnetometer (ES-5D) 254
Dikes (A87) 61
Ditch Excavation (A62A) 14
Drains
Overside (D87A, D87B) 95, 82
Pipe (D98A, D98B) 116, 117
Pipe Riser Connections (D93A) 102
Retaining Wall (B3-9) 164
Slotted Corrugated Steel
Underdrains (D87C) 83
Drains, Bridge
Area (B7-5) 170
Type A (B7-5) 170
Type B (B7-5) 170
Type D-1 (B7-6) 171
Type D-2 (B7-6) 171
Drainage Inlets
Concrete
Covers for Type OL and OS (D72) 76
Grate Details (D77A, D77B) 82, 83
Grate Frame Details
Typical Rectangular (D77A) 82
Type GDO Inlet (D74B) 79
Gutter Depressions (D78) 85
Miscellaneous Details (D74C) 80
Riser Connection from Inlet to Crossdrain
General Details (D93B) 103
Riser Safety Cage (D93B) 103
Trash Racks (D74B) 79
Type G1 thru G6 (D73) 77
Type GDO and GO (D74B) 79
Type GT1 thru GT4 (D74A) 78
Type GOL, OL and OS (D72) 76
Pipe
Covers for Side Opening Inlets (D75) 81
Grate and Frame Details (D77B) 83
Metal and Concrete (D75) 81
Trash Racks (D75) 81
Pumping Installations (D75) 81
Driveways (A87) 61

-E-

Edge Drain Cleanout and Vent
Details (D99C) 120

Page No.

Edge Drain Outlet and Vent
Details (D99B).....119
Electric Service Installation
Details (ES-2A, ES-2B,
ES-2C, ES-2D).....236-239
Electrical Details Structure
Installations (ES-7A, ES-7B, ES-7C,
ES-7D, ES-7E, ES-7F).....283-288
Electrical Symbols and
Abbreviations (ES-1A, ES-1B)..... 234, 235
Electrical Wiring Details and
Fuse Ratings (ES-14).....296
Electrolier Foundation Location (ES-11).....293
End Section, Flared (D94A, D94B)..... 105, 106
Entrance Taper, Overside Drain (D87A).....80
Equipment Mounting, Typical for Signal
(ES-3A, ES-3B, ES-3C,
ES-3D, ES-3E).....242-246
Equipment Numbers, Location on
Standards and Posts (ES-6A).....257
Excavation and Backfill
Bridge (A62B, A62C).....15, 16
Bridge Embankment Surcharge (A62B).....15
Crib Walls (A62B).....15
Ditch (A62A).....14
Headwalls, Pipe (A62A).....14
Miscellaneous (A62A).....14
Pipe and Culvert (A62D, A62E, A62F)... 17-19
Retaining Walls (A62B).....15
Roadway (A62A).....14
Slope Protection (A62A).....14
Underdrains (D87C).....83
Wingwalls (A62A).....14
Expansion Joint, Structure
Electrical Conduit (ES-7C).....285
Extinguishable Message Sign (ES-28).....300
240 mm Letters (ES-27A, ES-27B)... 298, 299
Flashing Beacon (ES-28).....300

-F-

Fence
Barbed Wire and Wire Mesh (A86).....60
Chain Link (A85).....59
Flared End Section (D94A, D94B)..... 105, 106
Flares, Guard Railing (A77D).....39, 40
Flashing Beacon
Advance (ES-3C).....244
Cantilever (ES-9A, ES-9B)..... 290, 291
Extinguishable Message
Sign (ES-28).....300
Flume Downdrain (D87B).....82
Fluorescent Sign Lighting
Equipment (ES-30).....302
Fluorescent Lighting Fixture
Pedestrian Overcrossing (ES-15).....297
Pedestrian Undercrossing (ES-12).....294
Foundation, Typical Signal and Lighting
Location Details (ES-11).....293
Cast-In-Drilled Hole Pile (ES-6T).....279
Fuse Ratings (ES-14).....296

Page No.

-G-

Girder Details
Box (B7-1).....169
Prestressed, Cast-In-Place (B8-5).....174
T-Beam (B6-1).....166
Glare Screen, Concrete Headlight (A75D).....26
Grate Details
Drainage Inlets
(D77A, D77B, D74B).....82, 83, 79
Retaining Wall Drains (B3-9).....164
Grounding, Service (ES-2A).....236
Guard Railing, Metal Beam
Anchors (A77G, A77GA, A77H, A77I)... 42-45
Connections to Bridge Railings, Retaining
Walls and Abutments(A77J).....46
Connections to Bridge Sidewalks
and Curbs (A77K).....47
Flares (A77D, A77E).....39, 40
General Details (A77A).....36
Hardware (A77B).....37
Miscellaneous Details (A77F).....41
Post and Blocks (A77C).....38
Gutter Depressions (D78).....85
Gutter, Retaining Wall (B3-9).....164

-H-

Hand Railing, Bridge Tubular (B11-51).....177
Headlight Glare Screen, Concrete
(A75D).....26
Heads, Signal, Mounting and Details
(ES-3A, ES-3B, ES-3C,
ES-3D, ES-3E).....242-246
Headwalls (Endwalls, Wingwalls)
Arch Culvert Warped Wingwalls (D86C).....94
Box Culvert Wingwalls
Types A, B, C (D84).....90
Types D, E (D85).....91
Warped (D86A).....92
Pipe Culvert Wingwalls
Types A, B, C (D90).....101
Warped (D86B).....93
Pipe - Straight & L (D89).....100

-I-

Inlets, Drainage
Concrete
Covers for Type OL and OS (D72).....76
Grate Details (D77A, D77B).....82, 83
Grate Frame Details
Typical Rectangular (D77A).....82
Type GDO Inlet (D74B).....79
Gutter Depressions (D78).....85
Miscellaneous Details (D74C).....80
Riser Connection from Inlet to Crossdrain
General Details (D93B).....103
Riser Safety Cage (D93B).....103
Trash Racks (D74B).....79

Page No.

Inlets, Drainage
Concrete (Cont'd)
Type G1 thru G6 (D73).....77
Type GDO and GO (D74B).....79
Type GT1 thru GT4 (D74A).....78
Type GOL, OL and OS (D72).....76
Pipe
Covers for Side Opening Inlets (D75).....81
Grate and Frame Details (D77B).....83
Metal and Concrete (D75).....81
Trash Racks (D75).....81
Pumping Installations (D75).....81
Inlet Structure, Slotted Drain
Connection (D98A, D98B).....116, 117
Irrigation and Planting
Abbreviations (H1).....122
Symbols (H2).....123
Details (H3, H4, H5,H6, H7, H8)).....124-129
Irrigation Controller Enclosure
Cabinet (ES-4D).....250
Irrigation Supply Line In/On
Bridges (B14-4, B14-5).....184, 185
Isolux Diagrams (ES-10).....292

-J-

Joint, Contact or Weakened Plane (A35A).....12
Joint Seal Details (B6-21).....168
Joints, Concrete Pipe (D97H).....115
Joints, Corrugared Metal
Pipe (D97E, D97F, D97G).....112-114

-K-

Keyway, Concrete Pavement (A35A).....12
Kilometer Post Marker (A73B).....21

-L-

Lane closures
Freeways and Expressways (T10).....136
Freeways and Expressways,
Complete Closures (T10A).....137
Multilane Conventional
Highways (T11, T12)).....138,139
Ramp (T14).....141
Two Lane Conventional
Highways (T13).....140
Lane closures, moving
Multilane Highways (T15, T16).....142, 143
Two lane Highways (T17).....144
Left Turn Signal and Sign
Standard Type 33 (ES-6V).....282
Lighting Fixture
Fluorescent, Pedestrian
Undercrossing (ES-12).....294
Fluorescent, Pedestrian
Overcrossing (ES-15).....297
Lighting Standards
Foundation Location Details (ES-11).....293
Slip Base Insert for Type 15 (ES-6U).....281

Page No.

Lighting Standards (Cont'd)
Type 15, 21 and 22 (ES-6B).....259
Type 30 and 31 (ES-6D).....261
Type 32 (ES-6DA).....262
Type 30 and 31 Slip Base Details (ES-6E).263
10 Degree Type (ES-6F, ES-6H).....264, 265
Lightweight Overhead Sign
(See Overhead Signs)
Load Test Pile Details
(B2-9, B2-10, B2-11).....153, 154, 155
Loop Detectors (ES-5A, ES-5B, ES-5C).....251-253
Luminaire, Isolux Diagrams (ES 10).....279
Luminaires Soffit, Bridge
(ES-7E, ES-7F).....287, 288

-M-

Magnetometer Sensing Element
(ES-5D).....254
Manhole Frame and Cover, Bridge
Deck or Sidewalk (B7-11).....173
Markers (A73A, A73B).....20, 21
Markers, Pavement (A20A, A20B,
A20C, A20D).....3-6
Markings, Pavement (A24A, A24B,
A24C, A24D, A24E).....7-11
Message Sign, Extinguishable
250 mm Letters (ES-27A, ES-27B)...298, 299
Flashing Beacon (ES-28).....300
Metal Beam Guard Railing
Anchors (A77G, A77GA, A77H, A77I)...42-45
Connections to Bridge Railings, Retaining
Walls and Abutments(A77J).....46
Connections to Bridge Sidewalks
and Curbs (A77K).....47
Flares (A77D, A77E).....39, 40
General Details (A77A).....36
Hardware (A77B).....37
Miscellaneous Details (A77F).....41
Post and Blocks (A77C).....38
Metal Marker Post (A73B).....21
Monuments, Survey (A74).....23
Motorcycle Passageway in Thrie
Beam Median Barrier (A80).....44
MultiPlate Arch Vehicular
Undercrossing (B14-1).....182

-O-

Object Markers (A73A).....20
Overhead Signs
Box Beam Closed Truss
Foundation (S39).....214
Ribbed Sheet Metal Details (S40C)....217
Single Post Butterfly
Frame Details (S40K).....225
Frame Juncture Details (S40L).....226
Post Details (S40M).....227
Single Post Cantilever
Frame Details (S40H).....222
Frame Juncture Details (S40I).....223
Post Details (S40J).....224

Page No.

Overhead Signs
Box Beam Closed Truss
Single Post Type (Cont'd)
Frame Members (S40G).....221
General Frame Details (S40B).....216
Two Post Type
Frame Details (S40D).....218
Frame Juncture Details (S40E).....219
Frame Members (S40A).....215
General Frame Details (S40B).....216
Post Details (S40F).....220
Walkway Details (S9, S10)..... 201, 202
Two Post Type
Safety Railing Details (S11).....203
Fluorescent Sign Lighting
Equipment (ES-30).....302
Tubular
Foundation Details (S40T).....233
Instructions and Examples (S40N).....228
Single Post Type, Layout and
Pipe Selection (S40P).....229
Structural Frame Details
(S40R, S40S)..... 231, 232
Two Post Types, Layout and
Pipe Selection (S40Q).....230
Lightweight
Balanced - Single Steel Post
Connection Details
Type A (S15).....207
Type B (S16).....208
Type C (S17).....209
Foundation (S20B).....213
Light Fixture Mounting
Details (S18B).....211
Post Connection and Mounting
Details (S14A, S14B)..... 205, 206
Post Details (S20A).....212
Sign Panel Mounting Details, Laminated
Panel, Type A (S18A).....210
Truss
Frame Juncture Details (S7).....196
Instruction & Examples (S1).....190
Laminated Panel, Type A (S8C).....199
Pile Foundation (S13).....204
Removable Sign Panel Frames
(S8B).....198
Removable Sign Panel Frames
2.794 m and 3.048 m
Sign Panels (S8D).....200
Safety Railing Details (S11).....203
Sign Mounting Panel Details
Formed Panel on Removable
Frames (S8B).....198
Single Post Type
Post Type II thru VIII (S2).....191
Structural Frame Members (S4).....193
Structural Frame Detail (S6).....195
Two Post Type
Post Type I-S thru VII-S (S3).....192
Structural Frame Members (S5).....194
Walkway Details (S9, S10)..... 201, 202
Overside Drains (D87A, D87B).....95, 82

Page No.

-P-

Parking, Acessible (A90).....63
Pavement Markers and Traffic Lines
(A20A, A20B, A20C, A20D).....3-6
Markings, Pavement (A24A, A24B,
A24C, A24D, A24E).....7-11
Paving Details, Concrete (A35A).....12
Pedestrian
Barricade (ES-5F).....256
Overcrossing Fluorescent
Lighting Fixture (ES-15).....297
Push Button (ES-5C).....241
Push Button Post (ES-6A).....257
Signals (ES-3B, ES-3C),..... 243, 244
Signs (ES-5C).....241
Undercrossing Fluorescent
Lighting Fixture (ES-12).....294
Permeable Backfill, Bridge (B0-3).....146
Pervious Backfill, Bridge (B0-3).....146
Photoelectric Control Unit
Extinguishable Message Sign and
Flashing Beacon (ES-28).....300
Pole Top Details (ES-6T).....279
Pile, Concrete
400 mm Cast-In-Drilled-Hole (B2-3).....149
Class 400 & 625 (B2-5).....150
Class 400C & 625C (B2-6).....151
Class 900 & 900C (B2-8).....152
Load Test Pile Details
(B2-9, B2-10, B2-11).....153, 154, 155
Pile Foundation, Overhead Signs
(S13, S20B, S39).....204, 213, 214
Pipe
Coupling Band Details, Corrugated Metal Pipe
(D97A, D97B, D97C, D97D, D97E,
D97F, D97G).....108-114
Culvert Headwalls,
Excavation and Backfill (A62A).....14
Headwalls, Endwalls and Warped
Wingwalls (D86B).....93
Headwalls, Straight and "L" (D89).....100
Strut Details, Structural Steel
Plate (D88A).....99
Headwalls, Types A, B, C (D90).....101
Overside Drains (D87A).....95
Inlets
General Details (D75).....81
Covers for Side Opening Inlets (D75)...81
Grate and Frame Details (D77B).....83
Metal and Concrete (D75).....81
Trash Racks (D75).....81
Pumping Installations (D75).....81
Riser Connections (D93A, D93B).. 102, 103
Riser with Debris Rack Cage (D93C).....104
Planting and Irrigation
Abbreviations (H1).....122
Symbols (H2).....123
Details (H3, H4, H5,H6, H7, H8)).... 124-129
Polystyrene, Protection of, in Structures
(B0-13).....148

Page No.

Portable Barricade (A73C).....22
Post Anchorage Details, Bridge Railing
Chain Link (B11-7)).....175
Tubular Hand (B11-51)).....177
Precast Reinforced Concrete Pipe -
Direct Design Method (D79).....86
Pressure Relief Joint, Concrete Pavement
(A35A).....12
Prestressed Cast-In-Place Girder Details
(B8-5).....174
Protection of Polystyrene in Structures (BO-13). 148
Pull Box (ES-8).....289
Pull Box, Structures (ES-7A, ES-7B, ES-7C,
ES-7D, ES-7E)..... 283- 287

-R-

Railing
Cable, Retaining Wall (B11-47).....176
Chain Link Type 7 (B11-52).....178
Concrete Barrier
Type 25 (B11-53).....179
Type 26 (B11-54).....180
Metal Beam Guard (A77A).....36
Metal Tube Bridge
Hand Railing (B11-51).....177
Temporary (Type K) (T3).....132
Ramp, Curb Details (A88).....62
Reinforced Concrete Crib Wall
(C7A, C7B, C7C C7D,
C7E, C7F,C7G).....64 - 70
Reinforced Concrete Pipe, Precast
Direct Design Method (D79).....86
Retaining Walls
Cable Railing (B11-47).....176
Counterfort
Details (B3-8, B3-9)..... 163, 164
Excavation and Backfill
Limits of Payment (A62B).....15
Type 1, H= 1200 thru 9100 mm (B3-1)...156
Type 1, H= 9700 thru 10 900 mm (B3-2). 157
Type 1-A (B3-3).....158
Type 2 (B3-4).....159
Type 3 (B3-5).....160
Type 4 (B3-6).....161
Type 5 (B3-7).....162
Type 6 - 1829 mm Max (B3-11).....165
Utility Opening (B3-9).....164
Riser
Connections
Crossdrains (D93A, D93B)..... 102, 103
Drainage Inlets (D93B)..... 102, 103
Underdrain (D87B).....82
Pipe With Debris Rack Cage (D93C).....104
Roadside Signs
Typical Installation Details (RS1,
RS2, RS3, RS4).....186 - 189
Rumble Strip Details (A40).....13

Page No.

-S-

Sacked Concrete Slope
Protection (B13-1).....181
Scale, Portable (A83).....58
Service Equipment, Signal and
Lighting (ES-2A, ES-2B,
ES-2C, ES-2D, ES-2E, ES-2F)..236 - 241
Shaped Bedding (A62D, A62F).....17, 19
Sign, Extinguishable Message
(ES-27A, ES-27B, ES-28).....298, 299, 300
SignIllumination, Internally Illuminated
Street Name Sign (ES-33)..... 305
Sign Lighting
Fluorescent Equipment (ES-30).....302
Mercury Equipment (ES-29).....301
Sign Lighting Control (ES-32B).....304
Sign Lighting Equipment (ES-32A).....303
Sign Standard and Left Turn
Signal Type 33 (ES-6V).....282
Signal
Arm Loadings, 113 km/h wind Velocity
(ES-6J, ES-K, ES-6L,
ES-6M, ES-6MA).....266 - 270
Arm Loadings, 129 km/h wind Velocity
(ES-6O, ES-6P, ES-6Q,
ES-6R, ES-6RA, ES6-RB).....272 - 277
Foundation Location Details (ES-11)....293
Heads and Mountings (ES-3A, ES-3B,
ES-3C, ES-3D, ES-3E).....242 - 246
Left Turn Standard, Type 33 (ES-6V)....282
Pedestrian Push Button Post
Details (ES-6AA).....258
Pedestrian Push Buttons (ES-5C).....241
Post and Mast Arm
Alternatives (ES-6TA).....280
Signs
Construction Project Funding
Identification (T7).....135
Roadside
Typical Installation Details
(RS1, RS2, RS3, RS4)..... 186- 189
Mounting Hardware (RS4).....189
Post and Pole Installation
Details (RS2, RS3..... 187, 188
Overhead (See Overhead Signs)
Slip Base Insert for Type 15
Lighting Standards (ES-6U).....281
Slip Base Details, Type 30 and 31
Lighting Standards (ES-6E).....263
Slope Protection
Concrete (B13-1).....181
Sacked Concrete (B13-1).....181
Excavation and Backfill (A62A).....14
Slotted Corrugated Steel Pipe Drain
Details (D98A,D98B)..... 116, 117
Snow Pole Bracket (A73B).....21
Soffit Luminaires, Bridge (ES-7E, ES-7F)... 287, 288

Page No.

Sprinkler Conduit In/on
Bridges (B14-3).....183
Standard
Lighting
High Mast Light Pole (ES-6C).....260
Slip Base Insert for
Type 15 (ES-6U).....281
Type 15, 21 and 22 (ES-6B).....259
Type 30 and 31 (ES-6D).....261
Type 32 (ES-6DA).....262
Type 30 and 31 Base Plate
Details (ES-6E).....263
10 Degree Type (ES-6F, ES-6H) 264, 265
Traffic Signal and Lighting
Arm Loadings (ES-6J, ES-6K, ES-6L,
ES- 6M, ES-6MA, ES-6O, ES-6P, ES-6Q,
ES-6R, ES6-RA, ES6-RB).... 266- 277
Cantilever Advance Flashing
Beacon Installation Types 9, 9A,
9B, (ES-9A, ES-9B)..... 290, 291
Left Turn Signal and Sign,
Type 33 (ES-6V).....282
Miscellaneous Details
(ES-6S, ES-6T)..... 278, 279
Push Button Post (ES-6AA).....258
Type I Standard and Equipment
Numbering (ES-6A).....257
Type 40-0-129 (ES-6N).....271
Steel Crib Wall
Construction Details (C8A).....71
Design Data (C8B, C8C).....72, 73
Excavation and Backfill (A62B).....15
Stirrups, Alternative (B0-5).....147
Structural Section Drainage System
Details (D99A).....118
Structural Steel Plate
Vehicular Undercrossings (B14-1).....182
Excavation & Backfill (A62F).....19
Structure Installations,
Electrical Details (ES-7A, ES-7B,
ES-7C, ES-7D, ES-7E, ES-7F)..... 283- 288
Strut Details for Structural Plate Pipes, Arches and
Vehicular Undercrossings (D88A).....99
Supply Line In/on Bridges (B14-4, B14-5)... 184, 185
Surcharge, Bridge Embankment (A62B).....15
Survey Monuments (A74).....23
Symbols and Abbreviations,
General (A10A, A10B).....1, 2
Symbols and Abbreviations,
Planting and Irrigation (H1, H2)..... 122, 123
Symbols and Abbreviations, Traffic Signal and
Lighting (ES-1A, ES-1B)..... 234, 235

-T-

T-Beam
Details (B6-1).....166
Utility Openings (B6-10).....167
Tapered Inlets, Overside Drains (D87B).....82
Terminal Compartment (ES-3D, ES-3E)..... 245, 246

Page No.

Temporary Bumpers, Bridge (BO-1).....130
Temporary Crash Cushion, Sand Filled
(T1, T2)..... 130, 131
Temporary Railing (Type K) (T3).....132
Temporary Terminal Section (Type K) (T5).....134
Temporary Traffic Screen (T4).....133
Thrie Beam Barrier
Anchors,End (A78E).....52
Connections to Bridge Curbs,
Retaining Walls and
Abutments (A78G).....54
Connections to Bridge Railing (A78F).....53
Connections to Concrete Barrier
Type 50 (A78H).....55
Type 60 (A78I).....56
General Details(A78A, A78B)..... 48,49
Miscellaneous Details (A78D).....51
Standard Hardware (A78C).....50
Tie Bars, Concrete Pavement (A35A).....12
Timber Crib Wall
Construction Details
Types A, B, C,& D (C9A).....74
Design Data (C9B).....75
Timber Crib Wall (Cont'd)
Excavation and Backfill (A62B).....15
Traffic Control System
Lane Closure on Freeways
and Expressways (T10).....136
Lane and Complete Closures on
Freeways and Expressways (T10A)..137
Lane Closure on Multilane
Conventional Highways (T11).....138
Lane Closure on Multilane
Conventional Highways (T12).....139
Lane Closure on Two Lane
Conventional Highways (T13).....140
Moving Lane Closure on Multilane
Highways (T15, T16)..... 142, 143
Moving Lane Closure on Two lane
Highways (T17).....144
Ramp Closures (T14).....141
Traffic Lines and Pavement
Markers (A20A, A20B, A20C, A20D))....3-6
Traffic Signal and Highway Lighting
Installation Details
(ES-6S, ES-6T)..... 278, 279
Traffic Signal and Lighting Standards
Arm Loadings (ES-6J, ES-6K, ES-6L,
ES- 6M, ES-6MA, ES-6O, ES-6P, ES-6Q,
ES-6R, ES6-RA, ES6-RB)..... 266- 277
Cantilever Advance Flashing
Beacon Installation Types 9, 9A,
9B, (ES-9A, ES-9B)..... 290, 291
Left Turn Signal and Sign,
Type 33 (ES-6V).....282
Miscellaneous Details
(ES-6S, ES-6T)..... 278, 279
Push Button Post (ES-6AA).....258
Type I Standard and Equipment
Numbering (ES-6A).....257
Type 40-0-129 (ES-6N).....271

Page No.

Transverse Contact Joint, Concrete Pavement
(A35A) 12
Trash Rack, Drainage and Pipe Inlets
(D74B, D75) 79, 81
Tubular Hand Railing (B11-51) 177
Tubular Overhead Signs (See Overhead Signs)

-U-

Underdrains (D87C) 83
Excavation and Backfill (D87C) 83
Risers (D87C) 83
Utilities Details (B7-11) 173
Utility Access Door (B0-13) 148
Utility Access Opening (B7-11) 173
Utility Opening - Box Girder (B7-10) 172

-V-

Vehicle Detectors, Traffic
Loop (ES-5A, ES-5B, ES-5C) 251-253
Magnetometer (ES-5D) 254
Magnetic (ES-5C) 241
Vehicular Undercrossing
Structural Steel Plate (B14-1) 182

Page No.

-W-

Wall Expansion Joint, Bridge
(B0-3) 146
Warped Wingwalls
Arch Culvert (D86C) 94
Box Culvert (D86A) 92
Excavation and Backfill (A62A) 14
Pipe Culvert (D86B) 93
Waterstop, Bridge (B0-1, B0-3) 145, 146
Weakened Plane Joint, Bridge (B0-3) 146
Weakened Plane Joint,
Concrete Pavement (A35A) 12
Weep Hole, Bridge (B0-3) 146
Wingwalls
Arch Culverts (D86C) 94
Box Culverts
Diaphragm Abutment, Bridge (B0-1) 145
Excavation and Backfill (A62A) 14
Pipe Culverts (D86B, D90) 93, 101
Types A, B, C (D84) 90
Types D, E (D85) 91
Warped (D86A, D86B, D86C) 92-94
Wiring and Splicing Details,
Electrical (ES-13, ES-14) 295, 296
Wiring Diagram Flashing Beacon
Control Assembly (ES-4C) 249
Wire Mesh Fence (A86) 60